THERMOPRO™ INSULATED SERVERS AND STANDS

MODEL: TXSG1501S600, TXSG0101S600, TXSG1501S200, TXSG0101S200

TXSG1501S600
1.5 Gallon Thermal Dispenser
With Lockable Base

TXSG0101S600
1.0 Gallon Thermal Dispenser
With Lockable Base

TXSG1501S200
1.5 Gallon Thermal Dispenser
Without Base

TXSG0101S200
1.0 Gallon Thermal Dispenser
Without Base

Curtis ThermoPro™ Stainless Vacuum Servers - Designed to Provide Optimum Heat Retention.

FEATURES AT A GLANCE

- Attractive design complements hotel lobbies, service bars or back-of house
- Stainless steel liner for commercial durability
- Integral base makes it easy to create remote coffee stations
- Brew-through top keeps heat and flavor in
- Sturdy handles and dual function faucet guard provide multiple carrying points for ease of transportation
- Separate drip tray for easy cup location and cleaning
- Significant faucet clearance for cup and decanter service
- Includes sight glass cleaning brush

DISPENSER BASE

TSS1A000
Single Thermal
Dispenser Base

TSS2A000
Twin Thermal
Dispenser Base

TXSG1501S600
1.5 Gallon Dispenser with Lockable Base

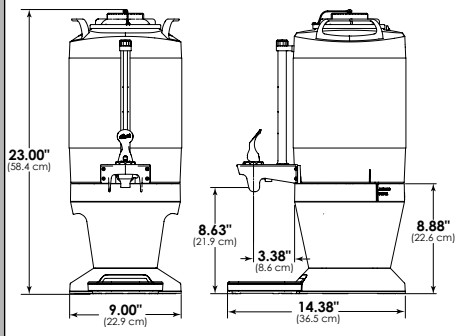

TXSG0101S600
1.0 Gallon Dispenser with Lockable Base

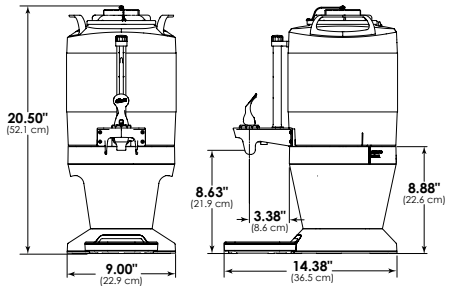

TXSG1501S200
1.5 Gallon Dispenser without Base

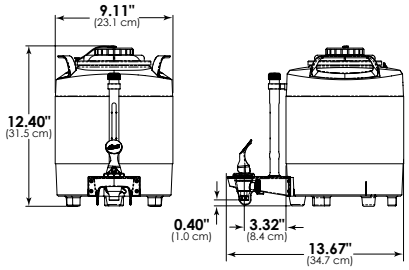

TXSG0101S200
1.0 Gallon Dispenser without Base

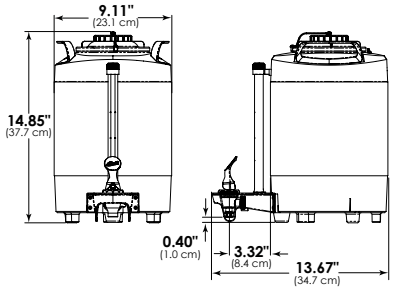

TSS1A000
Single Thermal Dispenser Base

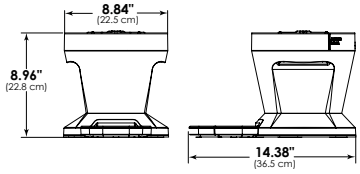

TSS2A000
Twin Thermal Dispenser Base

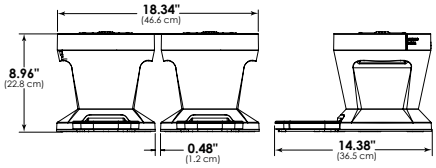

Specifications

MODEL #	CAPACITY	HEIGHT	WIDTH	DEPTH	SHIP WEIGHT	SHIP CUBE
TXSG1501S600	1.5 Gallon	23.00”	9.00”	14.38”	15.0 lbs.	2.30 cu. ft.
TXSG0101S600	1.0 Gallon	20.50”	9.00”	14.38”	15.0 lbs.	2.30 cu. ft.
TXSG1501S200	1.5 Gallon	14.85”	9.11”	13.67”	12.0 lbs.	2.05 cu. ft.
TXSG0101S200	1.0 Gallon	12.40”	9.11”	13.67”	11.0 lbs.	2.05 cu. ft.
TSS1A000	N/A	8.96”	8.84”	14.38”	6.0 lbs.	1.25 cu. ft.
TSS2A000	N/A	8.96”	18.34”	14.38”	11.0 lbs.	2.05 cu. ft.

SPECIFICATIONS SUBJECT TO CHANGE WITHOUT NOTICE

WARNING - These products can expose you to chemicals including Acrylamide and Bisphenol A (BPA), which are known to the State of California to cause cancer and birth defects or other reproductive harm. For more information visit www.P65Warnings.ca.gov

WILBUR CURTIS CO., INC.
6913 Acco Street, Montebello, CA 90640-5403
Telephone: 800-421-6150 · 323-837-2300
Fax: 323-837-2406
www.wilburcurtis.com

AUG/2018 – F-3895 revC