USER GUIDE

G3 Digital Iced Tea Brewing System



READ AND SAVE THESE INSTRUCTIONS

NOTICE TO INSTALLER: Please leave this booklet with the machine.

Key Features/Specifications/System Requirements....FS11
Important Safeguards....IS2
Installation Instructions (General)....II2
Installation Instructions (Leveling, Water Supply, Electrical)....II8
Operating Instructions....OI8
Cleaning Instructions (Brewer)....CI1
Cleaning Instructions (Tea Dispenser)....CI6
Programming Guide....PG4
Rough-In Drawing (TB)....RD12
Rough-In Drawing (TBP)....RD13
Rough-In Drawing (TBT)....RD14
Illustrated Parts/Recommended Parts (Main Chassis)....IP11
Illustrated Parts/Recommended Parts (Tank Assembly, Domestic)....IP21
Illustrated Parts/Recommended Parts (Tank Assembly, Export)....IP23
Electrical Schematic (Domestic)....ES12
Electrical Schematic (Export)....ES13
Troubleshooting Guide (General)....TG5
Troubleshooting Guide (Triac System)....TG8
Error Codes....EC4
Product Warranty....PW1

Contact Information

Wilbur Curtis Co., Inc.
6913 Acco Street | Montebello, CA 90640 US
Phone: 323-837-2300 | Toll Free: 800-421-6150
Email: csrassistance@wilburcurtis.com | Web: www.wilburcurtis.com

For the latest specifications and information go to www.wilburcurtis.com
Toll Free: 800-995-0417 | Monday - Friday 5:30 A.M. - 4:00 P.M. PT
Email: techsupport@wilburcurtis.com

Due to continued product improvement, the products illustrated/photographed in this guide may vary slightly from the actual product.

Key Features

- G3 Digital Control Module – Provides precise control for gourmet fine tuning with pulse-brewing, delay, and all critical brewing functions.
- G3 Enhanced Tea Flavor and Clarity – With digital accuracy, two separate precision valves provide unsurpassed control over brewing and dilution cycle.
- "Fast Brew" Option – Program selectable. Shortens brew time by allowing concentrate and dilution cycles to run at the same time.
- Intuitive Scroll-Through Precision Programming – Large, brightly lighted display communicates functions at a glance. Easily adjust time, volume, temperature, brew functions and more.
- On-Board Self Diagnostics - G3 continually senses proper brewing operation. A service phone number and error code will be displayed in the rare event technical assistance is required...reducing downtime.
- Cold Water Brew Lock-Out – Prevents brewing when water temperature is below set level.
- Industry's most effective mineral tolerant design.
- Encapsulated control boards – Protect against steam, water and impact.

Specifications

Electrical Supply Requirements

MODEL #	DESCRIPTION	PHASE	VOLTS	AMPS	HEATING CONFIG	WIRE	WATTS	HERTZ	CAPACITY
TB	Single, Iced Tea Brewing System	1 PH	120 V	13.8 A	1 X 1600 W	2W + G	1650 W	50/60 Hz	12.0 gal/hr [45.4 l/hr]
TB3	Single, Iced Tea Brewing System, Export	1 PH	230V	12.4A	1 X 2500 W	2W + G	2842 W	50/60 Hz	
TBP	Polaris, Single, Low Profile, Iced Tea Brewing System	1 PH	120 V	13.8 A	1 X 1600 W	2W + G	1650 W	50/60 Hz	
TBP3	Polaris, Single, Low Profile, Iced Tea Brewing System, Export	1 PH	230V	12.4A	1 X 2500 W	2W + G	2842 W	50/60 Hz	
TBT	Single, Tall, Iced Tea Brewing System	1 PH	120 V	13.8 A	1 X 1600 W	2W + G	1650 W	50/60 Hz	
TBT3	Single, Tall, Iced Tea Brewing System, Export	1 PH	230V	12.4A	1 X 2500 W	2W + G	2842 W	50/60 Hz	

Dimensions

Water Supply Requirements

MODEL #	HEIGHT	WIDTH	DEPTH	SHIP WEIGHT	SHIP CUBE	WATER CONNECTOR	WATER PRESSURE	MIN. FLOW RATE
TB **TB3**	34.20" [86.9 cm]	10.11" [25.7 cm]	22.82" [58.0 cm]	41.0 lbs [18.6 kg]	9.14 cu. ft. [0.26 m^3]	1/4" flare	20 - 90 psi [138 - 620 kPa]	1.0 gpm [3.8 lpm]
TBP **TBP3**	29.38" [74.6 cm]	10.97" [27.9 cm]	25.70" [65.3 cm]	46.0 lbs [20.9 kg]	7.50 cu. ft. [0.21 m^3]			
TBT **TBT3**	38.45" [97.7 cm]	10.11" [25.7 cm]	22.82" [58.0 cm]	43.0 lbs [19.5 kg]	9.70 cu. ft. [0.27 m^3]			

Following are the factory default settings for the brewer:

- Brew Temperature = 204°F (96°C)
- Minimum Brew Temperature = 199°F (92°C)
- Brew Volume = Large-Small
- Energy Save Mode = Off

Symbols



This is the safety alert symbol. It is used to alert you to potential physical injury hazards. Obey all safety messages that follow this symbol to avoid possible injury or death.



DANGER - Indicates a hazardous situation which, if not avoided, will result in death or serious injury.



WARNING - Indicates a hazardous situation which, if not avoided, could result in death or serious injury.



CAUTION - Indicates a hazardous situation which, if not avoided, could result in minor or moderate injury.



NOTICE - Indicates a situation which, if not avoided, could result in property damage.



IMPORTANT - Provides information and tips for proper operation.



SANITATION REQUIREMENTS



WARNING - This product can expose you to chemicals including Acrylamide and Bisphenol A (BPA), which are known to the State of California to cause cancer and birth defects or other reproductive harm. For more information visit www.P65Warnings.ca.gov.

Important Safeguards/Conventions



WARNING:

- Make sure that this appliance is installed and grounded according to the INSTALLATION INSTRUCTIONS by qualified personnel before attempting to use it. Failure to follow the INSTALLATION INSTRUCTIONS could result in personal injury or void the warranty.
- This appliance is designed for commercial use. Any service other than cleaning and preventive maintenance should be performed by an authorized Wilbur Curtis service technician.
- To reduce the risk of fire or electric shock, DO NOT open the service panels. There are no user serviceable parts inside.
- Keep hands, arms and other items away from hot surfaces of the unit during operation.
- Clean the appliance and any dispensers completely before using them for the first time according to the CLEANING INSTRUCTIONS. Clean them regularly as instructed in the CLEANING INSTRUCTIONS.
- Use this appliance only for its intended use, brewing/dispensing hot and/or cold beverages/water.
- This appliance is not intended for use by persons (including children) with reduced physical, sensory or mental capabilities or lack of experience and knowledge, unless they have been given supervision or instruction concerning use of the appliance by a person responsible for their safety. Children should be supervised to ensure that they do not play with the appliance.
- Avoid spillage onto the power (mains) connector.

CE Requirements

- This appliance must be installed in locations where it can be overseen by trained personnel.
- For proper operation, this appliance must be installed where the temperature is between 5°C to 35°C.
- This appliance is not suitable for outdoor use.
- This appliance shall not be tilted more than 10° for safe operation.
- An electrician must provide electrical service as specified in conformance with all local and national codes. For safe use, an all-pole disconnection must be incorporated into the fixed wiring in accordance with the wiring rules outlined in clause 7.12.2 of IEC 60335 for meeting the minimum electrical safety of this standard.
- This appliance must not be cleaned by water jet.
- This appliance can be used by persons aged from 18 years and above if they have been given supervision or instruction concerning use of the appliance in a safe way and if they understand the hazards involved.
- Keep the appliance and its cord out of reach of children aged less than 18 years.
- Appliances can be used by persons 18 years and above with reduced physical, sensory or mental capabilities or lack of experience and knowledge if they have been given supervision or instruction concerning use of the appliance in a safe way and understand the hazards involved.
- Children under the age of 18 years should be supervised to ensure they do not play with the appliance.
- If the power cord is ever damaged, it must be replaced by the manufacturer or authorized service personnel with a special cord available from the manufacturer or its authorized service personnel in order to avoid a hazard.
- Machine must not be immersed for cleaning.
- Cleaning and user maintenance shall not be made by children unless they are older than 18 years and supervised.
- This appliance is intended to be used in household and similar applications such as:
  - staff kitchen areas in shops, offices and other working environments;
  - by clients in hotels, motels and other residential type environments;
  - bed and breakfast type environments.
- This appliance not intended to be used in applications such as:
  - farm houses
- Access to the service areas permitted by Authorized Service personnel only.
- The A-Weighted sound pressure level is below 70 dBA.

Disposal of Equipment

- This product contains plastic, metal and electronic components and is considered e-waste. At the end of its life, this product must not be disposed of in normal household waster but can be instead delivered to a collection point for recycling electric and electronic appliances, consult with the local municipality for proper disposal guidelines.

WARNING: Installation is to be performed only by a qualified installer.

WARNING: Improper electrical connection may result in an electric shock hazard or damage the unit. This appliance must be properly grounded.

NOTICE: DO NOT connect this appliance to a hot water supply. The water inlet valve is not rated for hot water. Do not exceed the maximum water pressure stated in the *SPECIFICATIONS* section.

IMPORTANT: Observe all governing codes and ordinances.

Installation Instructions

Installation Requirements

- A secure surface capable of supporting the weight of the appliance.
- For units without an attached cord set attached or dual voltage units set up for use with 220 - 240 Volts: Appropriately sized, UL listed, grounding type power cable to meet the electrical specifications for the appliance. If you have questions about the correct cable size and length, consult a qualified installer. If the appliance will be hard wired to a junction box, the power cable must be long enough so that the unit can be moved for cleaning underneath.
- A grounded electrical connection to an electrical circuit that meets the electrical specifications of the appliance (see *SPECIFICATIONS*). The circuit must be protected by the appropriate sized circuit breaker. If you are not certain that the existing circuit meets the requirements for your unit, consult a licensed electrician.
- A water filtration system is required to maintain trouble-free operation. Wilbur Curtis Co., Inc. recommends a Wilbur Curtis approved water filter. See the Curtis Equipment Catalog for a full line of Wilbur Curtis approved water filters.
- Potable water supply line connection from the water filter capable of supplying the minimum flow rate required by the specifications. The water supply line must be able to connect to the flare fitting on the back of the unit. See the *SPECIFICATIONS* section for the correct size. The water line should also be capable of being controlled by a shut off valve. Do not connect the water line to a saddle valve or needle valve.

IEC requires the following water connection:

1. A quick disconnect or additional coiled tubing (at least two times the depth of the appliance) is required so that it can be moved for cleaning underneath.
2. This equipment is to be installed with adequate back-flow protection to comply with applicable federal, state and local codes.
3. Water pipe connections and fixtures directly connected to a potable water supply shall be sized, installed and maintained in accordance with federal, state and local codes.

The International Plumbing Code of the International Code Council and the Food and Drug Administration (FDA) Food Code manual, direct that this equipment must be installed with adequate back-flow prevention in compliance with federal, state and local codes. For units installed outside of the U.S.A., make sure that the installation is in compliance with the applicable plumbing/sanitation code for your area.

Installation

Leveling

WARNING: Use the leveling legs to level the brewer only. Do not use them to adjust brewer height. Do not extend them higher than necessary.

1 Position the brewer on the countertop. Level it left to right and front to back by turning the bottom of the legs.

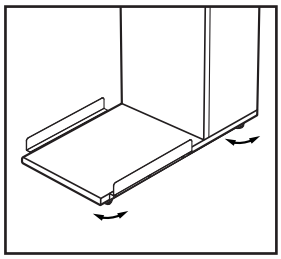

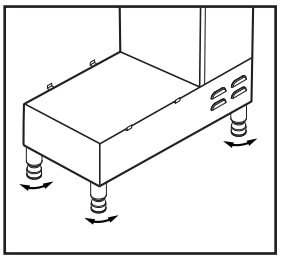

Connect the Water Supply

2 Flush the water supply line prior to installation to purge air and debris from the water filter and tubing.

3 Connect the water supply line to the flare fitting on the back of the brewer. Leave the water supply valve closed until the power is connected.

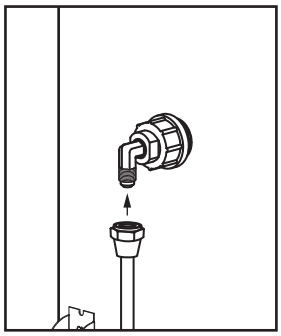

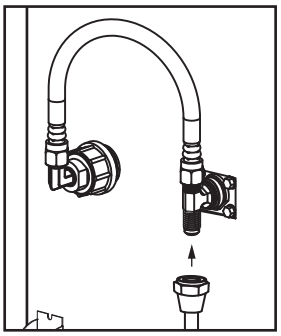

Connect the Brewer Wiring

<u>Brewers With a Power Connector Mounted on the Back</u>

4 Connect a C20 IEC power cord (not supplied) compatible with the electrical outlet installed in the facility and that meets specifications.

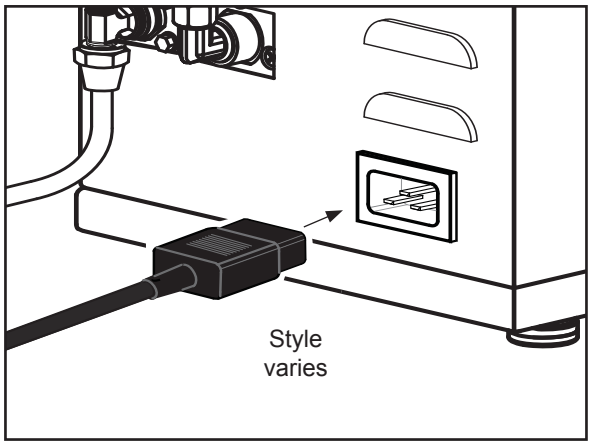

<u>Brewers With a Strain Relief Mounted on the Back</u>

5 Remove the front panel.

6 Loosen the strain relief on the back of the brewer.

7 On dual voltage units being operated at 220-240 Volts (nominal) disconnect the existing power cable from the terminal block and remove. Disconnect and cap the jumper wire between the “C” and “N” terminals on the terminal block.

8 Feed the 220-240 Volt power cable into the brewer. The brewer may be wired for connection directly to a junction box or (if local ordinances permit) for use with a power plug that connects to an electrical outlet meeting the brewer *SPECIFICATIONS*.

9 Connect the wires on the power cable to the terminal block inside the brewer.

10 Tighten the strain relief and replace the front panel.

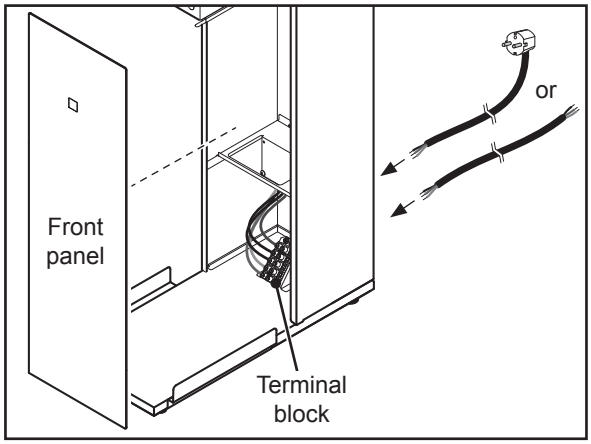

Connect the Brewer Wiring (cont.)

11 If the power cord will be connected directly to the junction box, connect the power cable wires to the terminals in the junction box. See the *ELECTRICAL SCHEMATIC* for the power supply requirements.

WARNING: Turn off power to the junction box at the circuit breaker panel before connecting the power cable to the brewer. Lock out and tag the circuit breaker.

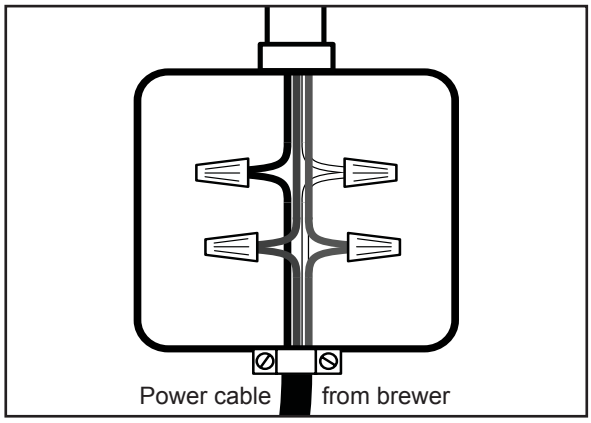

Brewers That Come With A Cord Attached

12 If not already installed, install the appropriate type of power plug for your locality. Consult local electrical codes to determine the approved type of power plug for your region.

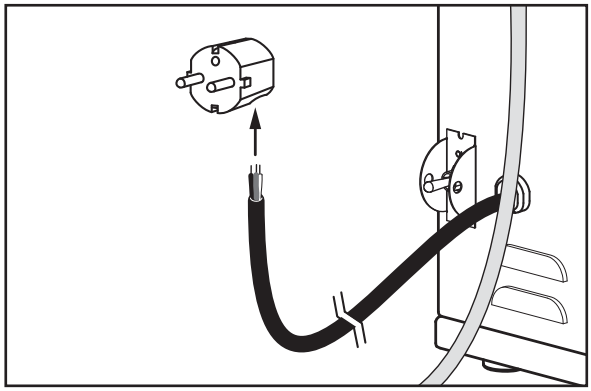

Connect the Bag-in-Box (BIB) Sweetener - Units Equipped for Brewing Sweet Tea Only

13 Connect two bag-in-box (BIB) sweeteners to the brewer sweetener supply hoses as instructed in the *OPERATING INSTRUCTIONS* section. Connecting two bags allows the brewer to continue operating if one bag runs out. The length of the tubing from the transfer valve to each bag-in-box connector is should be 1 ft. (30.5 cm) to 3 ft. (91.4 cm). The total length of tubing from each bag-in-box connector to the brewer can be up to 6 ft. (183 cm) under optimal conditions.

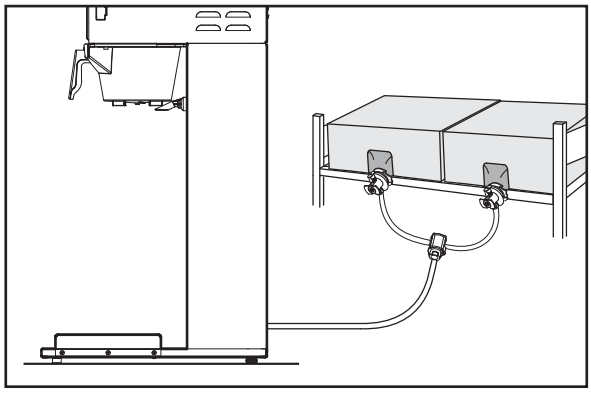

Power Up the Brewer

14 Turn on the water supply valve.

15 On units with a power plug, connect it to the appropriate electrical outlet.

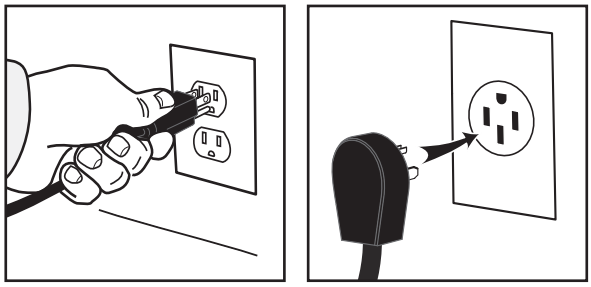

WARNING: Connect the power cord only to the appropriate type and size electrical outlet. If it is not compatible, either have the cord replaced or have the electrical outlet upgraded by a licensed electrician. Do not use an extension cord. Do not use a power cord/plug that is damaged.

Power Up the Brewer (cont.)

16 Make sure that the circuit breaker supplying power to the unit is on.

17 Turn the toggle switch on the back of the brewer to the ON position. The water tank will start to fill. While the tank is filling, inspect the water supply line for leaks.

18 When the water in the tank rises to the correct level, the heating elements will turn on automatically. Depending on the incoming water temperature and the electrical specifications, the water tank typically requires 20 to 30 minutes to reach the factory set operating temperature. When the water has heated, **Ready to brew** will be displayed on the LCD screen.

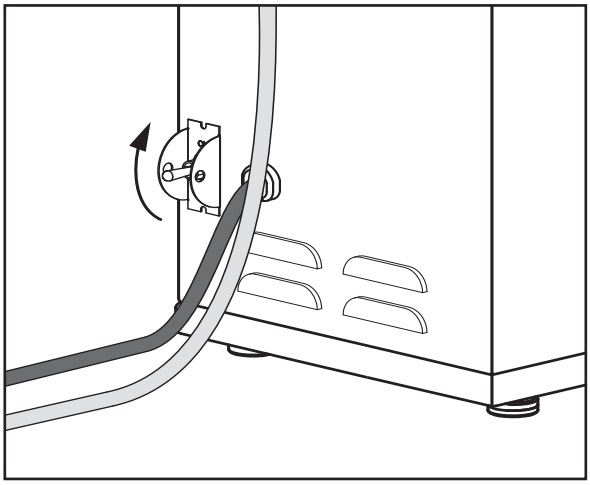

IMPORTANT: When operating the brewer at higher elevations, reduce the factory set operating temperature (204°F/96°C) by 2°F/1°C for each 1000 ft. (300 m) of elevation above 2000 ft. (600 m). See *PROGRAMMING GUIDE*.

19 Perform a brew cycle of a least 12 oz. (350 ml) to purge any remaining air from the system. See *OPERATING INSTRUCTIONS*. During the initial brew cycle and whenever the filter is replaced, you may hear the sounds of air being purged from the filter, tubing and water tank.

20 If the unit is equipped with a hot water faucet, fill a coffee cup with hot water to purge air from the hot water line.



Brewing Instructions

WARNING - TO AVOID SCALDING, AVOID SPLASHING. Keep body parts clear of the brewer during brewing. Do not remove the brew basket while “Brewing” appears on the display.

WARNING - DO NOT refrigerate unused tea overnight for later consumption.

The G3 Tea Brewer is factory preset for optimal performance.

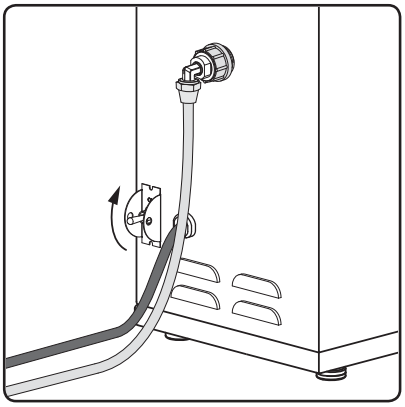

1 The brewer should be ON. Confirm this at the rear toggle switch. “Ready to brew” should be on the display.

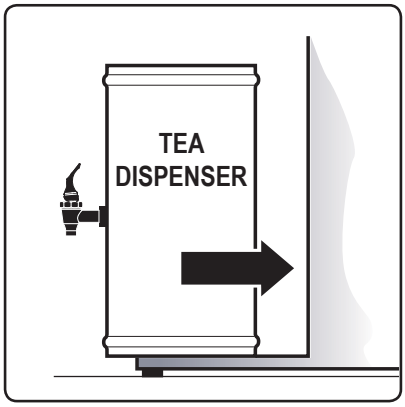

2 Remove/open the lid from an empty tea dispenser and position it on the brew deck. Center it under the brew basket.

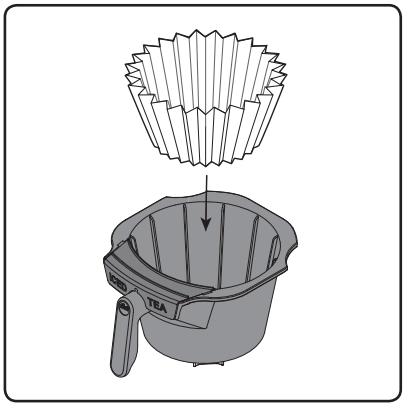

3 Insert a clean paper filter into the brew basket.

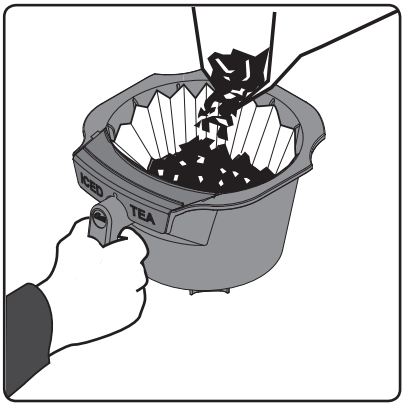

4 Fill with the proper amount of leaf tea. Level the tea in the filter.

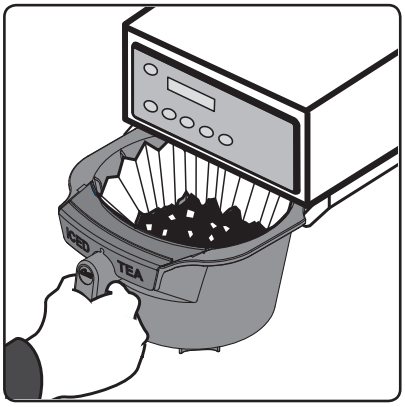

5 Slide the filled brew basket into the brew rails under the control panel. Slide it all the way back until it stops.

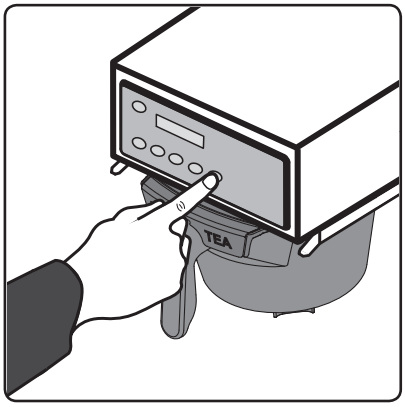

6 Press the brew button. Brewing will begin immediately.

The brewer will brew coffee or tea based on the settings programmed into the universal control module (UCM). To change the settings, see the PROGRAMMING GUIDE.

WARNING: HOT SURFACES - To avoid injury, allow the brewer and dispenser(s) to cool before cleaning.

NOTICE - Do not use cleaning liquids, compounds or powders containing chlorine (bleach) or corrosives. These products promote corrosion and will damage the finishes. **USE OF THESE PRODUCTS WILL VOID THE WARRANTY.**

Cleaning The Brewer - Daily

WARNING: DO NOT immerse the brewer in water or any other liquid.

The brewer should be OFF. Turn the brewer off by flipping the rear toggle switch to the OFF position.

1 Remove the dispenser(s). Wipe exterior brewer surfaces with a damp cloth to remove spills and debris.

2 Remove the brew basket(s) and clean them in a mild detergent solution. Use a soft bristled brush for hard to clean areas. Rinse with clean water, then dry.

3 Wipe the spray head area with a cloth soaked in a mild detergent solution. Rinse with a cloth soaked with clean water removing any residual detergent. Use a clean, soft cloth to dry.

4 Dump out the drip tray(s) (if applicable). Rinse with clean water, then dry with a soft, clean cloth.

Cleaning The Brewer - Weekly

The brewer should be OFF. Turn the brewer off by flipping the rear toggle switch to the OFF position.

1 Remove the spray head(s), unscrewing counterclockwise from the dome plate.

2 Thoroughly clean and rinse the dome plate area.

3 Clean the brew basket rails with a brush soaked with a mild detergent solution. Rinse the area with a cloth soaked with clean water, removing any residual detergent.

4 Dry the area with a soft, clean cloth.

5 Reattach the spray head(s).

Cleaning the Tea Dispenser (Daily)

The following cleaning process requires a mild solution of dish-washing detergent and warm water, and One-Pro Beverage Equipment Cleaner (Curtis PN WC-79001). Mix the One-Pro cleaner at a ratio of 1 oz. (28 g.) per 5 gal. (19 L) of hot water (122°F/50°C min.).

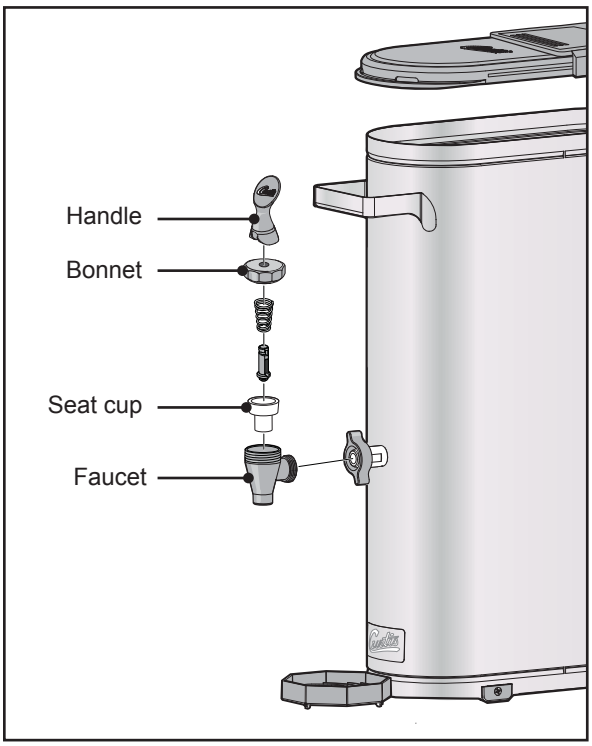

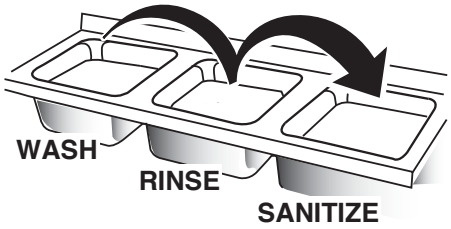

Container

1 Prepare a mild solution of detergent and warm water. Remove the dispenser from the brewer and remove the lid. Rinse.

2 **Wash** - Wipe the exterior surfaces with a sponge and the detergent solution to remove spills and debris. Use the detergent solution and a soft bristled brush to wash the inside of the container.

3 **Rinse** - Rinse with clean, warm water.

4 **Sanitize** - Fill the container to the top with One-Pro cleaning solution, mixed as specified above. Allow the mixture to soak for 15 minutes, then drain. Fill the container to the top with warm clean water, then drain. Fill with water and drain a second time.

5 Disassemble the faucet - Unscrew the faucet assembly from the dispenser. Then, unscrew the handle/bonnet assembly from the top of the faucet and remove. Inspect the seat cup for wear. Replace the seat cup if it is damaged.

6 **Air Dry** - Turn the container upside down and allow to air dry.

Faucet, Lid and Drip Tray

7 **Wash** - Wash the lid, drip tray and faucet parts with the detergent solution.

8 **Rinse** - Thoroughly rinse all parts with clean, warm water.

9 **Sanitize** - After rinsing, place the faucet parts in One-Pro solution, mixed as specified above, and allow them to soak for 15 minutes.

10 **Air Dry** - Remove the parts from the sanitizer, rinse them off thoroughly, and allow them to air dry.

11 Reassemble - When dry, reassemble the handle/bonnet. Hand tighten the handle/bonnet onto the top of the faucet assembly. Hand-tighten the faucet assembly onto the dispenser outlet.

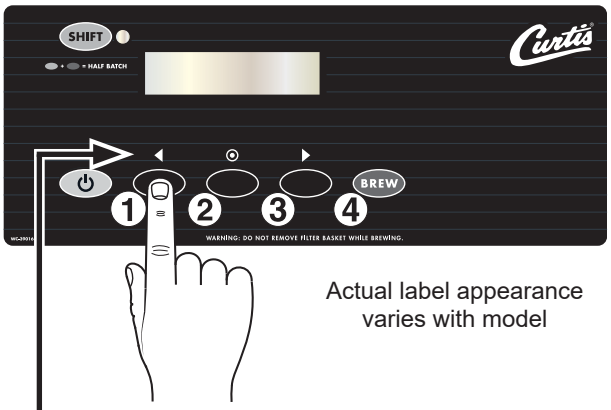

Actual label appearance varies with model

To enter programming mode:

With unit OFF, press and hold bottom right BREW button (4). Then press and release ON/OFF button. Continue to hold down BREW button until Enter Code appears.

Enter 4 digit code. (factory default = 1-2-3-4)

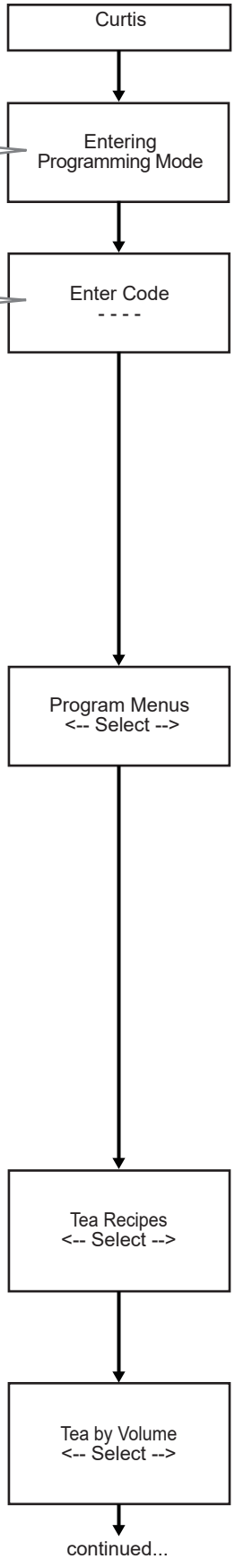

IMPORTANT: All programming functions are performed with the three center buttons.

The symbols below the buttons are:

- ◄ Scroll UP (1)
- ⊙ SELECT or ENTER to save new parameter (2)
- ► Scroll DOWN (3)

Once you enter programming mode, press ◄ or ► to scroll UP or DOWN through the various functions/features. Press ⊙ (Select) to make changes to the function/feature displayed. Then press ◄ or ► to scroll through the various available settings. See ***Programming Options*** for detailed descriptions.

Programming Options

To exit, press ► until Exit appears on the display, then press ⊙.

Tea Recipes - sets the tea recipe. Press ⊙ to access. Press ◄ or ► to choose from standard-gray, standard-purple, Standard-Amber, Tropical-Gray, Tropical-Purple, 76/308-Gray or 76/308-Purple. Press ⊙ to save and exit programming mode.

Tea by Volume - sets the tea brewing volume. After selecting this feature (⊙), press the BREW button for which the brew volume needs to be changed (SHIFT+BREW selects half batch on some models). Place an empty container under the (empty) brew basket. Press the same BREW button again to start. When the desired volume is reached, press the BREW button again to stop the flow. The volume has been set. Press ► to display the subsequent menu features.

Programming Options (cont.)

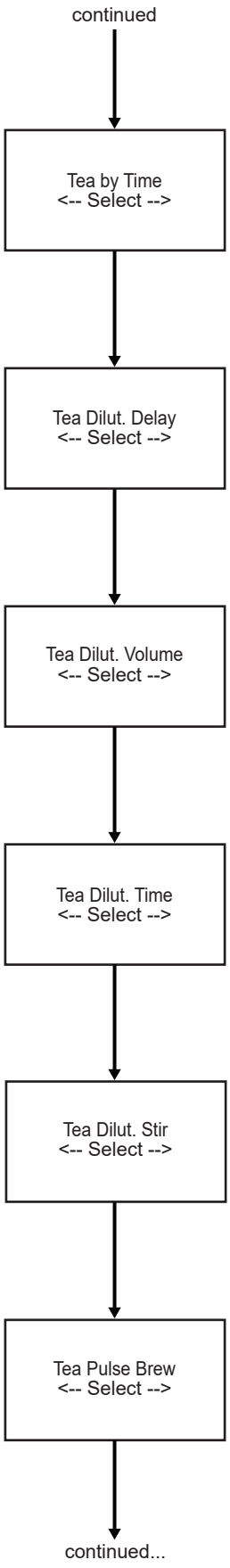

Tea by Time - sets the amount of tea brewed according to time. Once accessed (⊙), press the BREW button for which the brew time needs to be changed (SHIFT+BREW selects half batch on some models). Press ◄ or ► to highlight minutes or seconds. Press ⊙ to change the setting. The range is 0:00 to 9:59. Once the amount of time is entered, press ► until ex is flashing, then press ⊙ to save. Press ► to display the subsequent menu features.

Tea Dilut. Delay - sets the delay until tea dilution begins. Once accessed (⊙), press the BREW button for which the dilution delay needs to be changed (SHIFT+BREW selects half batch on some models). Press ◄ or ► to increase or decrease time. The range is 0:30 to 10:00. Press ⊙ to save. Press ► to display the subsequent menu features.

Tea Dilut. Volume - sets the tea dilution volume. Once accessed (⊙), press the BREW button for which the dilution volume needs to be changed (SHIFT+BREW selects half batch on some models). Place an empty container under the (empty) brew basket. Press the same BREW button a second time to start. When the desired dilution volume is reached, press the BREW button again to stop the flow. The dilution volume has been set. Press ► to display the subsequent menu features.

Tea Dilut. Time - sets the amount of tea dilution according to time. Once accessed (⊙), press the BREW button for which the dilution time needs to be changed (SHIFT+BREW selects half batch on some models). Press ◄ or ► to highlight minutes or seconds. Press ⊙ to change the setting. The range is 0:00 to 9:59. Once the amount of time is entered, press ► until ex is flashing, then press ⊙ to save. Press ► to display the subsequent menu features.

Tea Dilut. Stir - turns the dilution stir feature On and Off. Once accessed (⊙), press the BREW button for which stir needs to be turned On or Off (SHIFT-BREW selects half batch on some models). Press ◄ or ► to toggle between On and Off. Press ⊙ to save. Press ► to display the subsequent menu features.

Tea Pulse Brew - turns pulse brew On and Off and adjusts the pulse brew settings when set to On. Once accessed (⊙), press the BREW button for which pulse needs to be turned On or Off (SHIFT+BREW selects half batch on some models). Press ⊙ to save. If On is selected, subsequent screens will appear to adjust the Pulse Count, On Time and Off Time. Press ◄ or ► to select the setting for each screen, then press ⊙ to move to the next screen. Press ► to display the subsequent menu features.

Programming Options (cont.)

Tea Fast Brew - turns fast brew On and Off and adjusts the Delay Time when set to On. Once accessed (⊙), press the BREW button for which fast brew needs to be turned On or Off (SHIFT+BREW selects half batch on some models). Press ◄ or ► to toggle between On and Off, then ⊙ to save. If On is selected, the Delay Time screen will appear. Press ◄ or ► to change the setting, then ⊙ to save. Press ► to display the subsequent menu features.

Tea Half Batch - turns half batch On and Off. Once accessed (⊙), press ◄ or ► to toggle between On and Off. Press ⊙ to save. Press ► to display the subsequent menu features.

Tea Drip-Out - sets the Tea Drip-Out time. Drip-out allows additional time for tea to drain from the brew basket before "Brewing" disappears from the display. Once accessed (⊙), press the BREW button for which the drip-out feature needs to be changed (SHIFT+BREW selects half batch on some models). Press ◄ or ► to change the drip-out time. The range is Off to 15:00. Press ⊙ to save. Press ► to display the subsequent menu features.

Sweetener Time (units equipped for brewing sweet tea only) - adjusts the amount of time sweetener is dispensed when brewing sweet tea. Once accessed (⊙), press the BREW button for which the sweetener time needs to be changed (SHIFT+BREW selects half batch on some models). Press ◄ or ► to highlight minutes or seconds. Press ⊙ to change the setting. The range is 0:00 to 9:59. Once the amount of time is entered, press ► until ex is flashing, then press ⊙ to save. Press ► to display the subsequent menu features.

Sweetener Delay (units equipped for brewing sweet tea only) - sets the delay until sweetener begins pour. Once accessed (⊙), press the BREW button for which the sweetener delay needs to be changed. (SHIFT+BREW selects half batch on some models). Press ◄ or ► to increase or decrease time. The range is Off to 10:00. Press ⊙ to save. Press ► to display the subsequent menu features.

Swtnr-Dil Pulse (units equipped for brewing sweet tea only) - turns the Sweetener Dilution Pulse On and Off. Once accessed (⊙), press the BREW button for which dilution pulse needs to be turned On or Off. Press ◄ or ► to toggle between On and Off. Press ⊙ to save. Press ► to display the subsequent menu features.

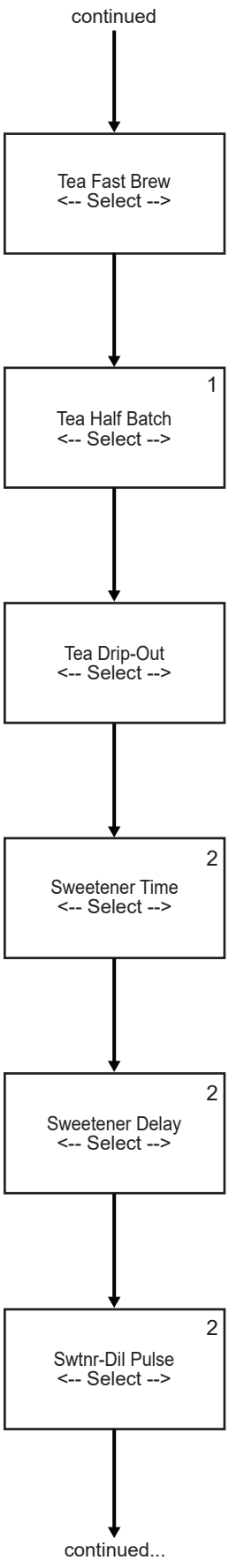

[1] Models TEA/IC-1BATCH, TEA/IC-2BATCH, TEA/IC-3BATCH, TEA/IC- 4BATCH, DUAL-DILUTION, TEA-SWEET, DUAL-SWEET and COMBO only.

[2] Models TEA SWEET, DUAL-SWEET and COMBO-SWEET. only.

Programming Options (cont.)

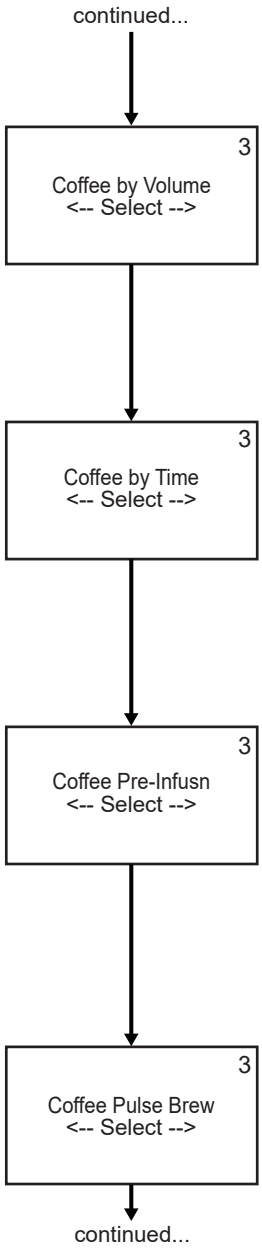

Coffee by Volume (combo units only) - sets coffee brewing volume. Once accessed (⊙), press the BREW button for which the brew volume needs to be changed (SHIFT+BREW selects half batch on some models). Place an empty container under the (empty) brew basket. Press the same BREW button again to start. When the desired volume is reached, press the BREW button again to stop the flow. The volume has been set. Press ► to display the subsequent menu features.

Coffee by Time (combo units only) - sets the amount of coffee brewed according to time. Once accessed (⊙), press the BREW button for which the brew time needs to be changed (SHIFT+BREW selects half batch on some models). Press ◄ or ► to highlight minutes or seconds. Press ⊙ to change the setting. The range is 0:00 to 9:59. Once the amount of time is entered, press ► until ex is flashing, then press ⊙ to save. Press ► to display the subsequent menu features.

Coffee Pre-Infusn (combo units only) - sets the brewer Coffee Pre-Infusion time (Pulse Brew must be Off to access). Pre-Infusion increases control of coffee clarity and extraction. Once accessed (⊙), press the BREW button for which pre-infusion needs to be changed. Press ◄ or ► to change the setting. The range is Off to 60 seconds. Press ⊙ to save. Press ► to display the subsequent menu features.

ⓘ When Coffee Pre-Infusion is On, Coffee Pulse Brew is disabled.

Coffee Pulse Brew (combo units only) - selects the Coffee Pulse Brew pattern (Pre-Infusion must be Off to access). The pulse brew pattern selected “tunes” or changes the flavor of the coffee. Once accessed (⊙), press the BREW button for which Pulse Brew needs to be changed. Press ◄ or ► to select the desired setting (see guidelines below for information on various settings). Press ⊙ to save. Press ► to display the subsequent menu features.

ⓘ When Coffee Pulse Brew is on, Pre-Infuson is disabled.

Setting	Description
A	Starts at beginning of brew cycle. 4 cycles of 10 seconds on and 5 seconds off, then on until end of brew cycle.
B	Starts towards end of brew cycle. 4 cycles of 5 seconds off and 4 cycles of 10 seconds on. Ends when brew cycle ends.
C	Starts at beginning of brew cycle. 5 cycles of 25 seconds on and 10 seconds off, then on until end of brew cycle.
D	Manually set. Starts at beginning of brew cycle. Number of pulses is adjustable from 1 to 20. Pulse on time and off time are both adjustable from 5 to 150 seconds, in 5 second increments.
E	Manually set. Starts at beginning of brew cycle. Number of pulses is adjustable from 1 to 8. Pulse on time and off time are both adjustable from 1 to 150 seconds.

continued...

[3] Models COMBO, COMBO/IC and COMBO-SWEET only.

Pulse Brew Guidelines

- Filter pack type coffees typically extract better with the A and B pulse setting.
- Decaffeinated coffees typically extract better with the B pulse setting.
- High-yield coffees typically extract better with the C pulse setting. Of course, any of the A, B or C settings may be used to suit your taste profile.
- Settings D and E are manual pulse counts.

Coffee Drip-Out (combo units only) - sets the Coffee Drip-Out time. Drip-out allows additional time for coffee to drain from the brew basket before "Brewing" disappears from the display. Once accessed (⊙), press the BREW button for which the Drip-Out time needs to be changed (SHIFT+BREW selects half batch on some models). Press ◄ or ► to increase or decrease time. The range is Off to 5:00. Press ⊙ to save. Press ► to display the subsequent menu features.

Safety Sw On/Off (combo units only) - turns the feature On and Off. Once accessed (⊙), press ◄ or ► to toggle between On and Off. Press ⊙ to save. Press ► to display the subsequent menu features.

Temperature - adjusts the maximum tank water temperature. Once accessed (⊙), press ◄ or ► to increase or decrease the temperature. The setting range is 170°F to 208°F (77°C to 98°C). Press ⊙ to save. Press ► to display the subsequent menu features.

Energy Save Mode - saves energy during periods when the brewer is not in use. When set to On, the brewer automatically shuts off four hours after the last brew cycle. Press the ON/OFF button to return to normal operation. When set to On-140°F (60°C), the brewer shuts off four hours after the last brew cycle, but the water tank temperature remains at 140°F. Use the On-140°F setting to reach brewing temperature faster after periods of non-use. Once accessed (⊙), press ◄ or ► to choose the desired setting. Press ⊙ to save. Press ► to display the subsequent menu features.

Brew Count Odom - When accessed, this feature displays the total brew cycles since the odometer was last reset. Press ► to go back without resetting or ⊙ to reset. Press ► to display the subsequent menu features.

Brew Count Total - when accessed (⊙), displays the total brew cycles on the brewer. It cannot be reset. The display returns to the previous screen automatically after a few seconds. Press ► to display the subsequent menu features.

continued...

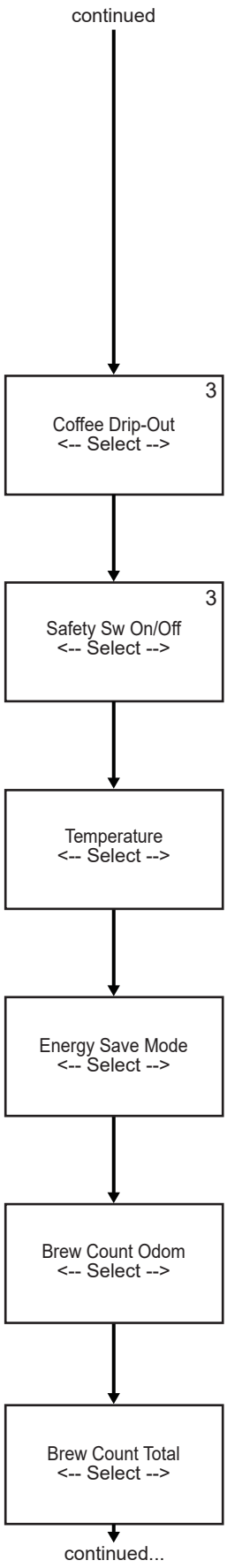

[3] Models COMBO, COMBO/IC and COMBO-SWEET only.

Programming Options (cont.)

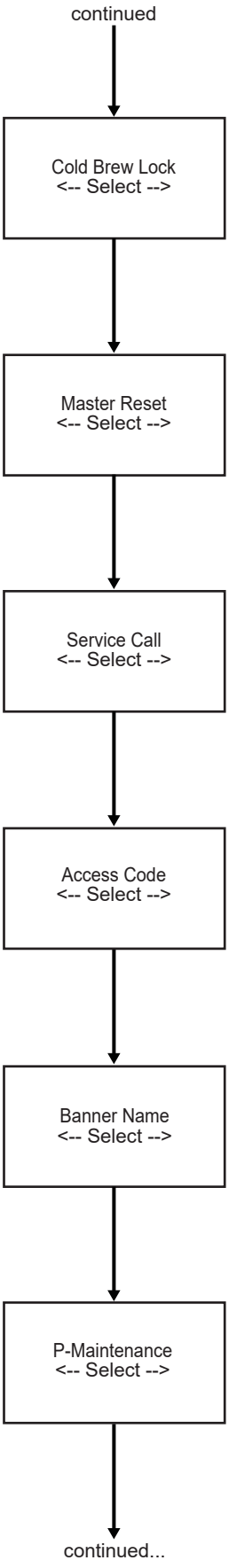

Cold Brew Lock - adjusts the temperature at which the brewer will brew when a BREW button is pressed (**Ready to brew** appears on the display). This feature also adjusts the temperature at which the heating element turns on to reheat the water in the tank. The available settings are 5°F/3°C, 15°F/8°C (below the water tank temperature settings) and Off. Off is within 30°F/17°C below the tank temperature setting. Once accessed (⊙), press ◄ or ► to select the desired setting. Press ⊙ to save. Press ► to display the subsequent menu features.

Master Reset - resets the brewer universal control module (UCM) to the factory default settings. Once accessed (⊙), "Are You Sure?" will appear on the display. Press ◄ for Yes or ► for No. If you press No, the display goes back to the programming menu. If you press Yes, the UCM will reset and exit programming mode.

Service Call - sets the service phone number that appears on the display when the UCM detects a SENSOR ERROR or WATER ERROR. Once accessed (⊙), press ◄ or ► to select the number to be changed. Press ⊙ repeatedly to change the number value. Press ◄ or ► to select the next number to change. When done, press ► until ex flashes on the display and press ⊙. Press ► to display the subsequent menu features.

Access Code - sets the access code entered to access programming mode (the factory default is 1-2-3-4). Once accessed (⊙), press ◄ or ► to select the number to be changed. Press ⊙ repeatedly to change the number value. Press ◄ or ► to select the next number to change. When done, press ► until ex flashes on the display and press ⊙. Press ► to display the subsequent menu features.

Banner Name - changes the banner name that appears on the display. No banner name appears when all blanks are entered. Once accessed (⊙), press ◄ or ► to select the letter to change. Press ⊙ repeatedly to change the letter. When done, press ► until ex flashes on the display and press ⊙. Press ► to display the subsequent menu features.

P-Maintenance - adjusts the P-Maintenance (preventive maintenance) brew monitor. When on, the UCM measures the number of gallons brewed before the P-Maintenance reminder appears on the display. The range is Off to 3000 gallons (11,000 liters). Once accessed (⊙), press ◄ or ► to select the desired setting, then press ⊙ to save. Press ► to display the subsequent menu features.

continued...

Programming Options (cont.)

Beeper On/Off - turns the beeper that is heard each time a button is pressed. Once accessed (⊙), press ◄ or ► to toggle between On and Off. Press ⊙ to save. Press ► to display the subsequent menu features.

Quality Timer - notifies the user that the coffee/tea is no longer fresh by monitoring the amount of time since the BREW button was last pressed. When time expires, an audio alarm turns on and **Quality Timer** flashes on the display. Once accessed (⊙), press ◄ or ► to increase or decrease the amount of time. The range is Off to 10 hours. Press ⊙ to save. Press ► to display the subsequent menu features.

Displ. Brew Time - turns the display of the brew time during brewing On and Off. Once accessed (⊙), press ◄ or ► to toggle between On and Off. Press ⊙ to save. Press ► to display the subsequent menu features.

Display Messages - turns display of the message “Rinse Server Before Brewing” On or Off. Once accessed (⊙), press ◄ or ► to toggle between On and Off. Press ⊙ to save. Press ► to display the subsequent menu features.

Model Select - changes the UCM to operate according to the model number. For proper operation, the model selected must match the model number label on the outside of the machine. Once accessed (⊙), press ◄ or ► until the model number matching the model number label on the brewer appears, then press ⊙. The UCM will reset and exit programming mode.

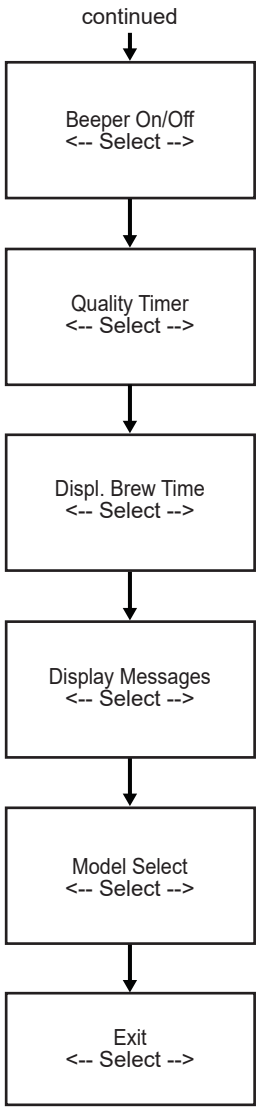

TB - Tea Brewer

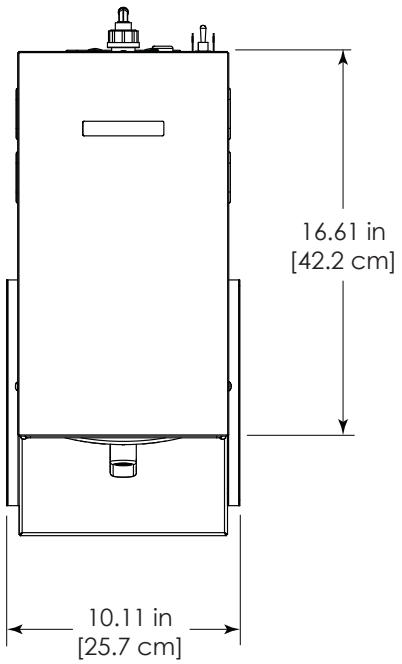

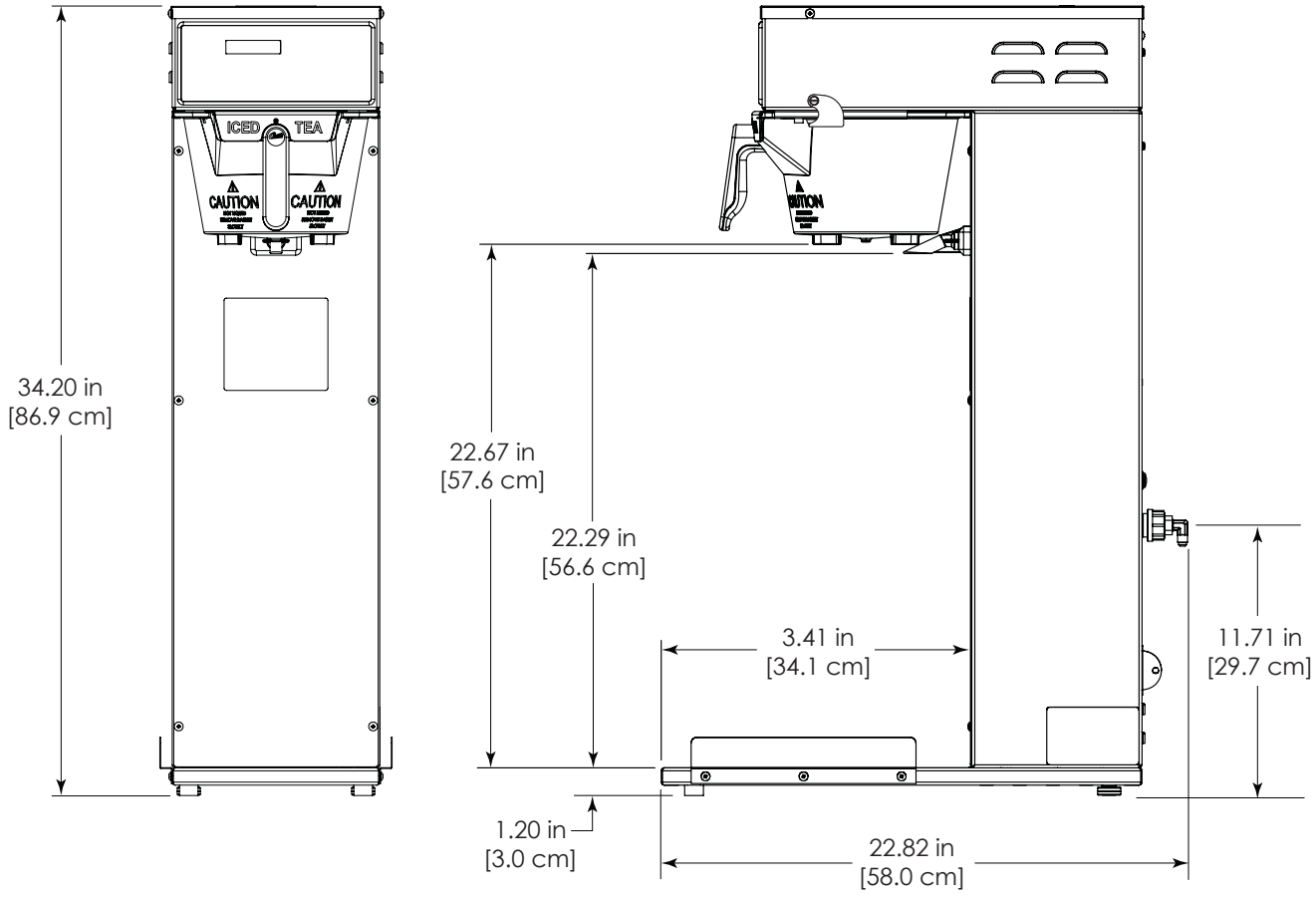

TBP - Tea Brewer

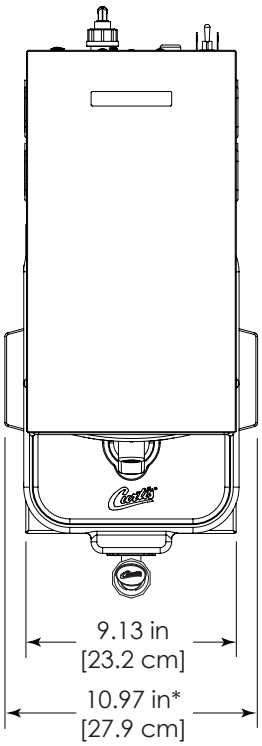

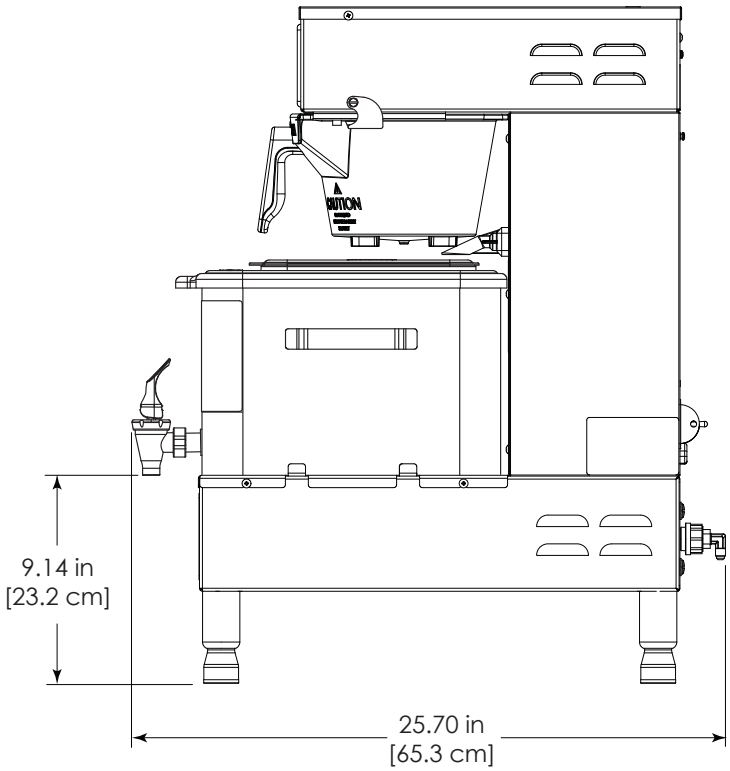

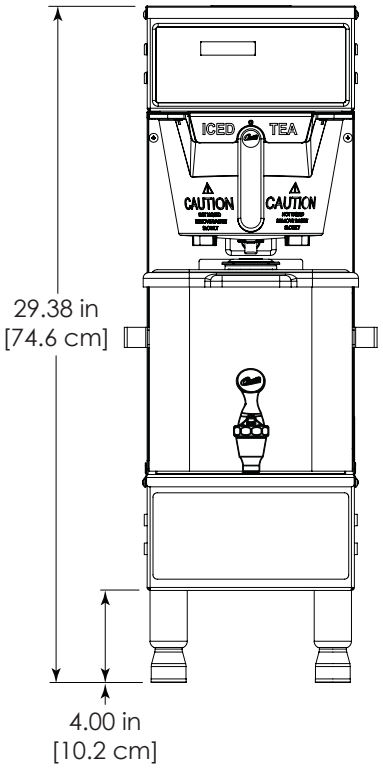

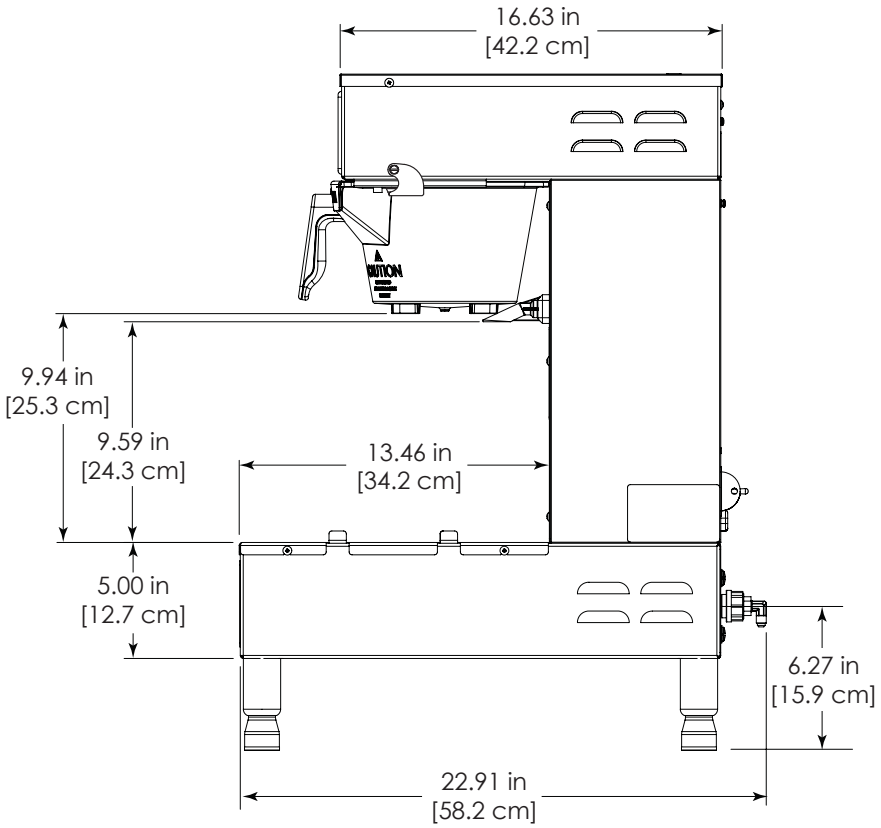

* Width with TCO38 dispenser in place.

TBT - Tea Brewer

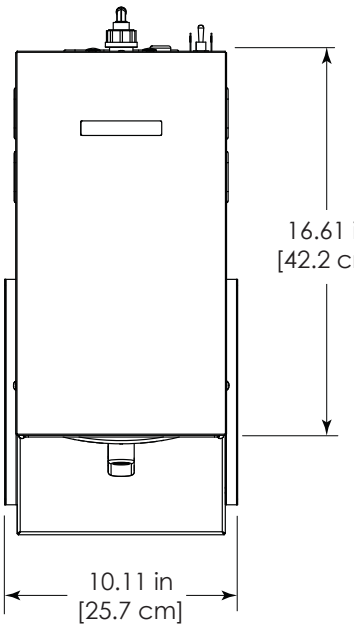

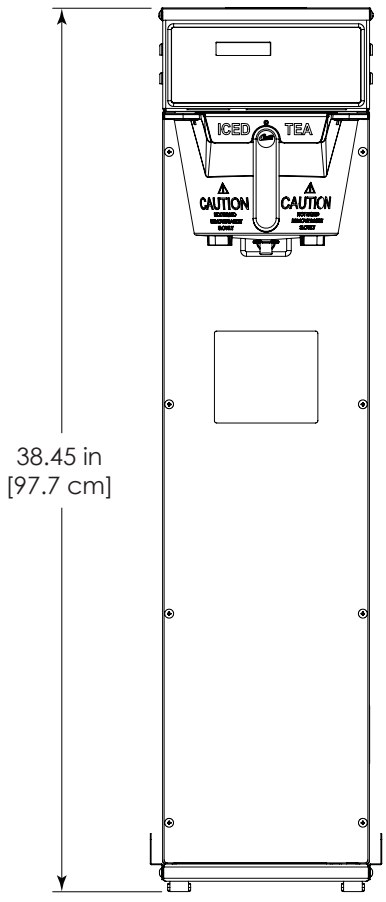

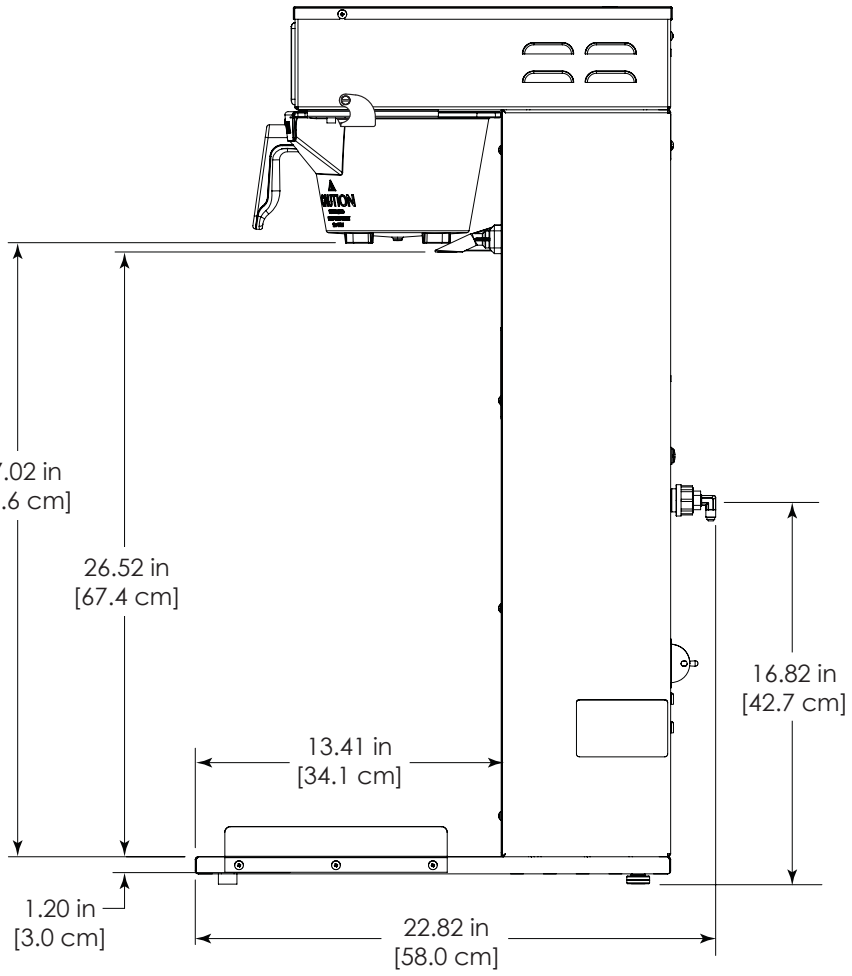

TB, TBP, TBT Series - Main Chassis - Exploded View

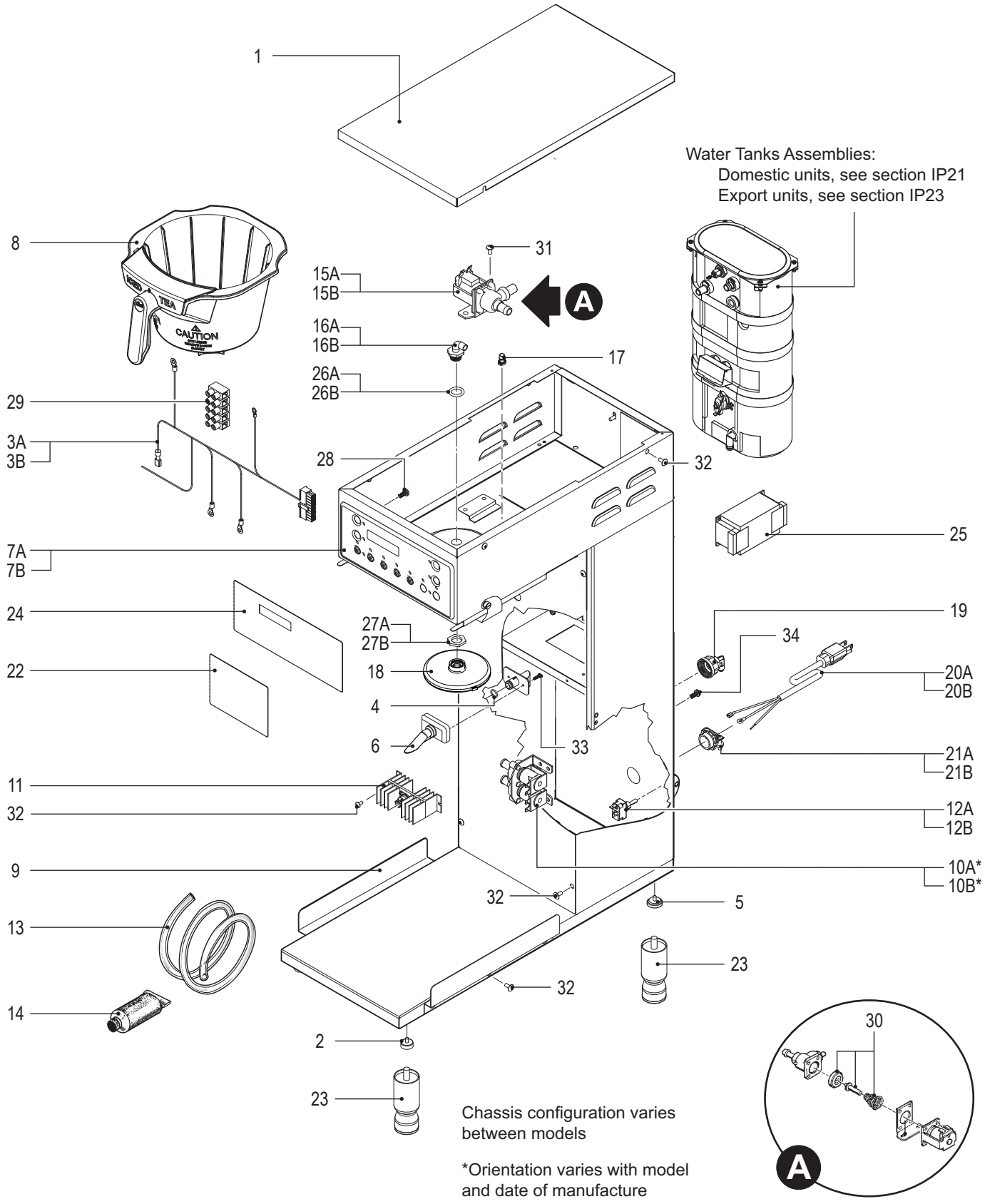

TB, TBP, TBT Series - Main Chassis - Parts List

ITEM #	PART #	DESCRIPTION
1	WC-58117	COVER, TOP ALPGT/D500GT/D60GT TLP/TCTS/CBS/ GEMSS
2	WC-3503	LEG, 3/8"-16 STUD SCREW BUMPER
3A[a]	WC-13043-106	HARNESS, ASSY TCTS/PTT3/CBS/RSTB/STB
3B[b]	WC-13044	HARNESS, ASSY TCTS/PTT3-30 (INCLUDES POWER BLOCK)
4	WC-43134	O'RING, .426 X 9/16 O.D X .070 WALL EDPM TCTS
5	WC-3518	LEG, GLIDE 3/8"-16 STUD SCREW
6	WC-66079	SPOUT ASSY , DILUTION PLASTIC
7A[a]	WC-786-104	CONTROL MODULE, UCM 120V TEA/ COMBO/SWEET TEA BREWER
7B[b]	WC-729-104	CONTROL MODULE, UCM 220V TEA/ COMBO/SWEET TEA BREWER
8	WC-3398	BREW CONE, ASSY STD TEA NON METAL W/BLU SPLASH POCKET
9	WC-8531	RAIL, BASE TCTD
10A[a]	WC-895-105	VALVE, INLET DUAL 120V 10W 2 GPM X .5 GPM
10B[b]	WC-878-102	VALVE, INLET DUAL 240V 6W 1.0 GPM TANK X .5 GPM DILUTION
11	WC-8556	HEATSINK, ASSY DV ALPDS/D500AP TCTD/PTTD
12A[a]	WC-102	SWITCH, TOGGLE NON-LIT SPST 15A 125/6A 250VAC RESISTIVE
12B[b]	WC-103	SWITCH, TOGGLE NON-LIT DPST 25A 125/250VAC RESISTIVE
13	WC-5310	TUBE, 5/16 ID x 1/8W SILICONE GEN USE
14	WC-5231	COMPOUND, HEAT SINK 5OZ
15A[a]	WC-889	VALVE, DUMP LEFT 120V 12W ALPHA'S/D1000/GEM-12/TLP
15B[b]	WC-860	VALVE, DUMP LEFT 220V 12W
16A[1]	WC-2977K	KIT, SPRAYHEAD FITTING METAL
16B[2]	WC-2977-101K	KIT, SPRAYHEAD FITTING PLASTIC
17	WC-29044-101	SLEEVE, OVERFLOW
18	WC-29025	SPRAYHEAD, PURPLE ADVANCE FLOW
19	WC-37255	KIT, DUAL VALVE WATER INLET
20A[a]	WC-1200	CORD, 14/3 SJTO 6' BLK W/PLUG
20B[b]	WC-1231-102	CORD, 2.5 mm² 90ºC 36A 450/750 V STRIPPED W/ FERRULES ONE END
21A[a]	WC-1408	CORD GRIP, 7/8" O.D.
21B[b]	WC-1419	CORD GRIP, 1/2" ROMEX
22	WC-390241	LABEL, FLAVOR OPTIONS & BREW BUTTONS
23[c]	WC-3528	LEG, 4" ADJUSTABLE 3/8-16 THRD ITALIAN STYLE
24	WC-390168	LABEL, UCM OVERLAY TB/TBP 1-BATCH CURTIS LOGO
25[b]	WC-596K	KIT, NOISE FILTER EMI 250V/30A 1PH
26A[1]	WC-4320	O'RING, 0.487I.D.x 0.693OD x0.103CS BUNA-N #112
26B[2]	WC-43089	GASKET, 1.00OD X .625 I.D. X .030 THK WHITE EPDM 70 SHORE
27A[1]	WC-4213-P	NUT, 5/8 LOCK PLATED
27B[2]	WC-4212-02	NUT, 5/8-18 JAM PLASTIC
28	WC-4439	SCREW, 6-32x¼ PHIL PAN HD SS
29	WC-314	POWER BLOCK, 5 STATION
30	WC-37132-101	KIT, VALVE REPAIR FOR DELTROL WC-820WDR,WC-821WDR, WC-844WDR
31	WC-4525	SCREW, 8-32x1/4PHILLIPS TRUSS HD SS
32	WC-4426	SCREW, 8-32x3/8 PH HEAD TRUSS
33	WC-4458	SCREW, 6-19 x 1/2" PHIL PAN HD TRI-LOBULAR 60-1 THRD FORMING
34	WC-4607	SCREW, 5/16-18x3/8"SS PAN HEAD

[a]Domestic units
[b]Export units
[c]TBP, TBP3

[1]Units built 05/15/17 and later.
[2]Units built before 05/15/17. The plastic fitting may be replaced with a stainless steel fitting, O-ring, and nut (item 16A). The brew settings for the unit must be changed when changing fitting types. See the instructions that come with the new fitting.

TB, TBP, TBT Series - Recommended Parts to Stock

ITEM #	PART #	DESCRIPTION
11	WC-8556	HEATSINK, ASSY DV ALPDS/D500AP TCTD/PTTD
12A	WC-102	SWITCH, TOGGLE NON-LIT SPST 15A 125/6A 250VAC RESISTIVE
13	WC-5310	TUBE, 5/16 ID x 1/8W SILICONE
14	WC-5231	COMPOUND, HEAT SINK 5OZ
15A	WC-889	VALVE, DUMP LEFT 120V 12W ALPHA'S/D1000/ GEM-12/TLP
16A	WC-2977K	KIT, SPRAYHEAD FITTING METAL
18	WC-29025	SPRAYHEAD, PURPLE ADVANCE FLOW
19	WC-37255	KIT, DUAL VALVE WATER INLET

WC-6277/WC-75236[-20] - Tank Assembly

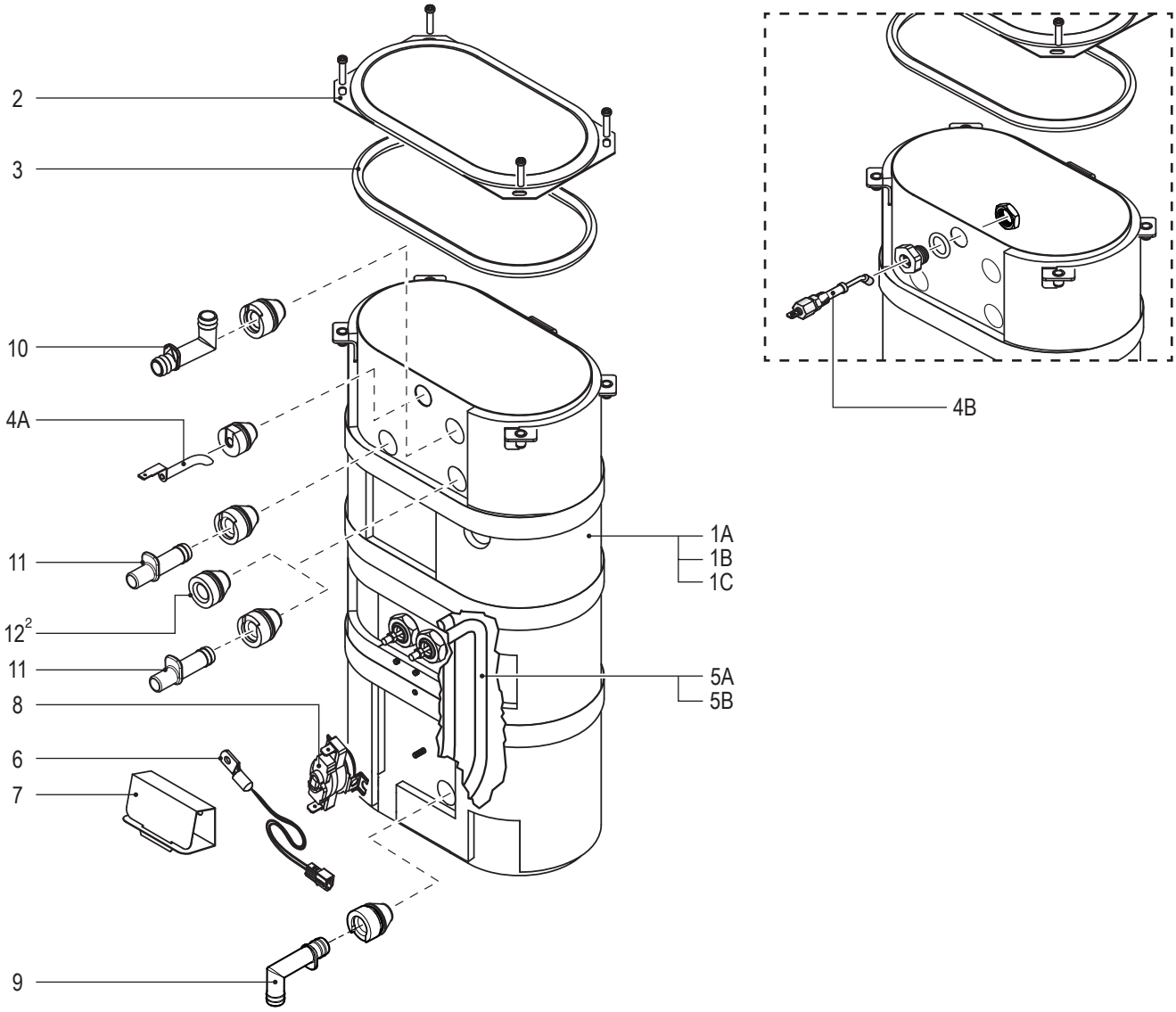

WC-6277/WC-75236[-20] - Tank Assembly - Parts List

ITEM #	PART #	DESCRIPTION
1A	WC-6277	TANK, COMPLETE 1600W 120V D500GT/TCTS/ PTT/CBS
1B[1]	WC-75236	TANK, ASSY D500GT/H/TCTS/PTT3/ CBS W/WC-904 HEATING ELEMENT
1C[3]	WC-75236-20	TANK, ASSY D500GT/H/TCTS/PTT3/CBS W/WC- 917 HEATING ELEMENT
2	WC-5853-102	COVER, TOP HEATING TANK GEN USE
3	WC-43062*	GASKET, TANK LID

ITEM #	PART #	DESCRIPTION
4A[a]	WC-5528K*	KIT, WATER LEVEL PROBE, SILICONE
4B[b]	WC-5502-01*	KIT, PROBE, ASSY WATER LEVEL W/HEX FITTING, O-RING & NUT
5A	WC-904-04*	KIT,ELEMENT, HEATING 1.6KW120V W/ JAM NUT & SILICONE O-RING
5B[3]	WC-917	ELEMENT, HEATING 1.45KW 120V W/JAM NUTS
6	WC-1438-101*	SENSOR, TEMPERATURE TANK
7	WC-4394*	GUARD, SHOCK/HEATING ELEMENT FOR SINGLE HEATING ELEMENT
8	WC-523*	THERMOSTAT, MANUAL RESET 120/ 240 VAC 25A 220 DEG F MAX
9	WC-37365*	KIT, FITTING TANK INLET
10	WC-37266*	KIT, FITTING TANK OVERFLOW
11	WC-37317*	KIT, STRAIGHT FITTING & BUSHNG 8mm GEN USE
12[2]	WC-2630*	BUSHING, CONICAL BLIND GEN USE

[1] For units without hot water faucet, specify that item 12 be installed in location shown when ordering

[2] For units without hot water faucet

[3] Canadian units

[a] Units built 01/04/2019 and later.

[b] Units built before 01/04/2019. Replaces WC-5527.

* Recommended parts to stock.

WC-6290-101 - Tank Assembly

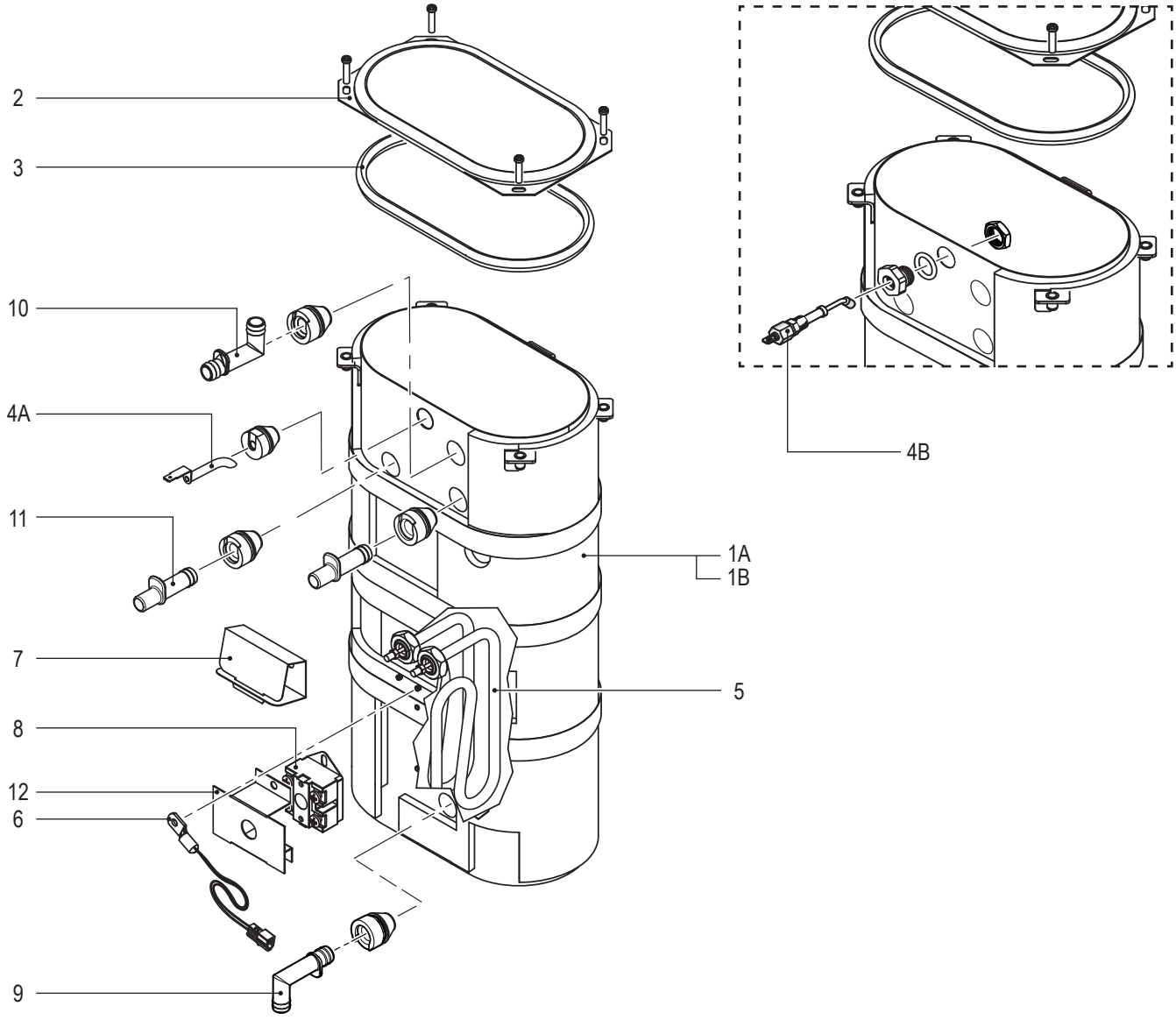

WC-6290-101 - Tank Assembly - Parts List

ITEM #	PART #	DESCRIPTION
1A	WC-75236-35	TANK, ASSY D500GT/H/TCTS/PTT3/ CBS W/WC- 934-101 ELEMENT
1B	WC-6290-101	PTT3 /CBS/W/WC- 934-01ELEMENT TANK, COMPLETE D500GT/TCTS/
2	WC-5853-102	COVER, TOP HEATING TANK GEN USE
3	WC-43062*	GASKET, TANK LID
4A[1]	WC-5528K*	KIT, WATER LEVEL PROBE, SILICONE
4B[2]	WC-5502-01*	KIT, PROBE, ASSY WATER LEVEL W/HEX FITTING, O-RING & NUT
5	WC-934-04*	KIT,ELEMENT HEATING 2.5KW 220V W/ JAM NUT & SILICONE WASHERS

ITEM #	PART #	DESCRIPTION
6	WC-1438-101*	SENSOR, TEMPERATURE TANK
7	WC-4394*	GUARD, SHOCK/HEATING ELEMENT FOR SINGLE HEATING ELEMENT
8	WC-522*	THERMOSTAT, HI LIMIT HEATER CONTROL DPST 277V 40A
9	WC-37365*	KIT, FITTING TANK INLET
10	WC-37266*	KIT, FITTING TANK OVERFLOW
11	WC-37317*	KIT, STRAIGHT FITTING & BUSHNG 8MM GEN USE
12	WC-43055*	GUARD, SHOCK RESET THERMOSTAT (WC-522)

[1] Units built 01/04/2019 and later.

[2] Units built before 01/04/2019. Replaces WC-5527.

* Recommended parts to stock.

TB - 120 Volts

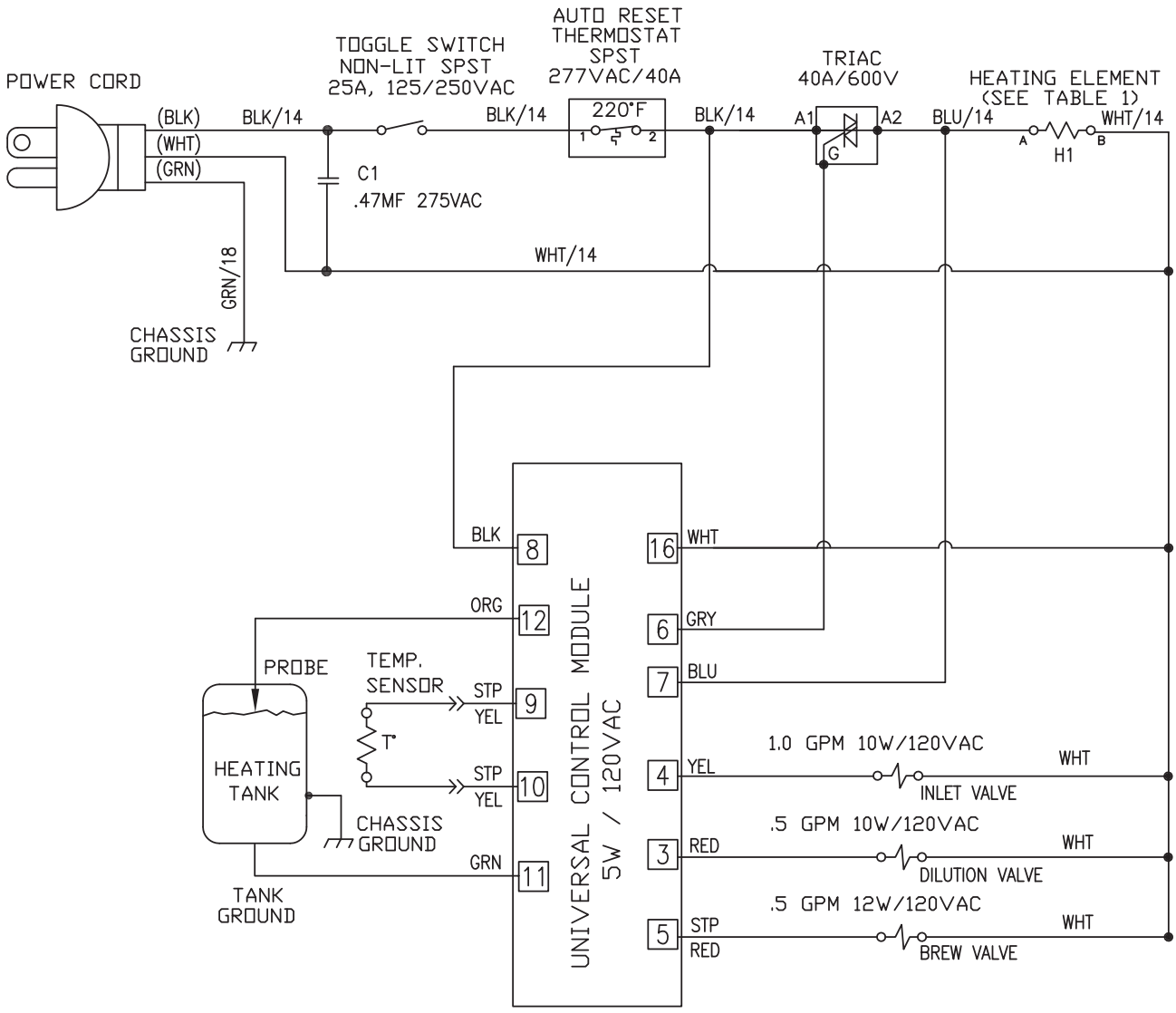

PIN ASSIGNMENTS
PIN 01: NOT USED
PIN 02: NOT USED
PIN 03: DILUTION VALVE
PIN 04: INLET VALVE / TANK
PIN 05: BREW VALVE
PIN 06: TRIAC GATE
PIN 07: TRIAC A2
PIN 08: 120VAC HOT
PIN 09: TEMP SENSOR
PIN 10: TEMP SENSOR
PIN 11: GROUND
PIN 12: WATER LEVEL PROBE
PIN 13: NOT USED
PIN 14: NOT USED
PIN 15: NOT USED
PIN 16: 120VAC NEUTRAL

ELECTRICAL RATING TABLE 1

MACHINE	HEATING ELEMENTS	TOTAL POWER (WATTS)	TOTAL CURRENT (AMPERES)
(SC)TCTS/T-10 PTT3-10 / TBS	1600W 120VAC	1650W	13.8A
(SC)TCTS/T-20 PTT3-20 / TBS-20	1450W 120VAC	1500W	12.5A

TRIAC PIN ASSIGNMENTS

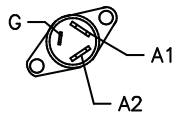

VOLTAGE:	120VAC
WATTAGE:	SEE TABLE 1
AMPERAGE:	SEE TABLE1
HERTZ:	50/60
WIRES:	2W+G
PHASE:	1PH

2. USE THIS DIAGRAM FOR ALL OTHER MODELS WITH ADDED PREFIX LETTERS AND/OR DIFFERENT DASH NUMBER ON THEIR PART NUMBERS HAVING THE SAME ELECTRICAL RATINGS.
EX.: TCTS10000

1. ALL WIRES SHALL BE 18 AWG PVC COATED.

NOTES: UNLESS OTHERWISE SPECIFIED

TITLE: LADDER DIAGRAM

PART NUMBER: LD-TCT-10

REVISION: J

TB, CB, TBP - 220 to 240 Volts Export

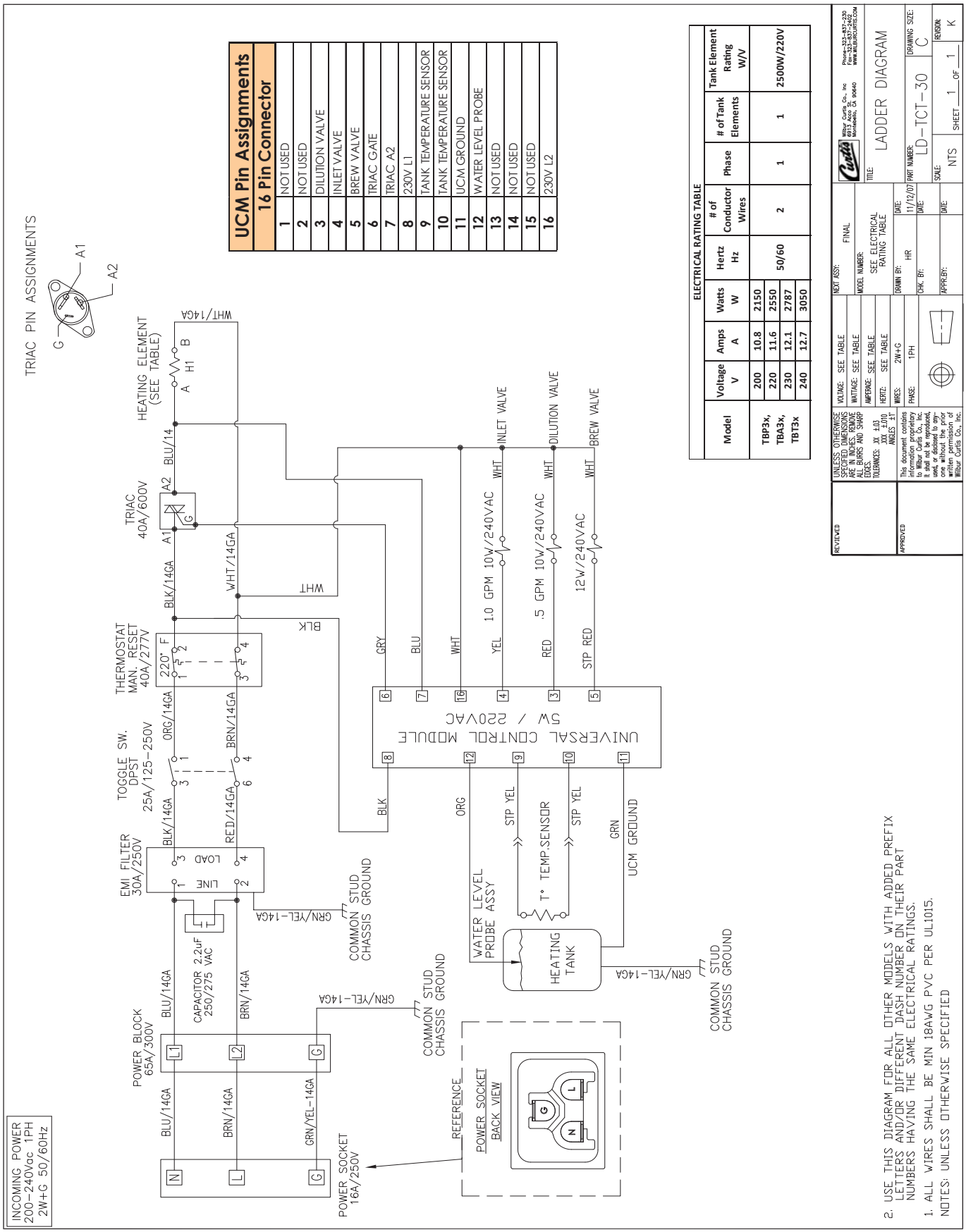

WARNING:

Electric Shock Hazard - the following procedures are to be performed only by a qualified service technician. Disconnect power when replacing components. Lock out and tag the circuit breaker on units without a power plug. Neither Wilbur Curtis Co., Inc. nor the seller can be held responsible for the interpretation of this information, or any liability in connection with its use.

Scald and Burn Hazard - keep body parts clear of hot surfaces during troubleshooting.

IMPORTANT: If it is necessary to replace the G3 universal control module (UCM), always check all inlet, dump (brew), bypass* and dilution* valve coils for a short and replace the valve as necessary, before replacing the module. See the ***Valve Test Procedure***, below to test for defective valves. *Some units do not have this function, see the *ELECTRICAL SCHEMATIC*.

Troubleshooting Guidelines

- If an error message appears on the display, consult the *ERROR CODES* section before troubleshooting.
- A brewer that is not level may not function properly. Make sure the brewer is properly leveled before proceeding.
- This troubleshooting guide identifies some, but not all, of the possible causes for common problems that can occur.
- Use this troubleshooting guide along with the appropriate *ELECTRICAL SCHEMATIC.*

Valve Test Procedure

Use a digital multi-meter to measure the resistance of valve coils.

Measure the resistance across the valve coil terminals with the wiring harness disconnected. Reverse the meter leads on the terminals and measure the resistance in the opposite direction. A resistance of less than 100 ohms, in either direction, indicates a shorted coil. The valve must be replaced.

If a shorted coil is not detected, test for an open coil:

1 Reconnect the valve terminals to the wiring harness.

2 Power up the brewer with the appropriate cover removed to allow access to the valve.

3 Run a brew cycle while monitoring the voltage at the valve coil terminals. If voltage is present on the terminals, you should hear the valve click open/closed at the moment power is applied or removed from the terminals. The inlet valve should open any time the water tank is not full. If the valve does not open, replace the valve. If voltage is not detected, first check the wiring. If the wiring is OK, replace the UCM.

Water Not Hot Enough

1 If the water heats, but is not hot enough, first check for the correct temperature setting on the control panel. Reprogram as necessary.

2 If the temperature setting is OK, and the actual water temperature does not match setting on the control panel, replace the temperature sensor.

Water Heats More Slowly Than Usual

1 Check for power across the terminals of the heating element(s). If power is being supplied, disconnect the heating element(s) and check for continuity. Replace a heating element if the resistance is too high (nominal resistance is 13 Ohms).

2 If there is no power to the heating element(s), check the wiring to any element that does not have the proper voltage across it. Also check for corroded connections anywhere between the power cord and the heating element(s).

Dispenser Overflows <u>During Brewing</u>

1 Check to make sure the control module (UCM) brew, bypass* and dilution* levels are set properly.

2 Check for a missing spray head. Replace as needed.

3 Make sure the dispenser is empty before starting the brew cycle. If not, empty it before brewing.

*Some units do not have this function, see the *ELECTRICAL SCHEMATIC*.

No Power - Display Not Lit

1 Make sure the circuit breaker to the circuit supplying power to the brewer is not tripped and is turned on.

2 On brewers with a power plug, make sure it is connected to the power receptacle.

3 Make sure that the main power toggle switch on the back panel is turned ON.

4 Verify that all wires from the power cord are properly connected inside the unit. Check to make sure the wires are not burned/overheated. Loose connections can create heat. Check chassis ground.

5 Check to make sure power and ground are being supplied to the control module (UCM). If there is power into UCM, but display is blank, UCM is probably bad.

6 If there is no power into the UCM, trace the circuit back (using the wiring diagram) to the power cord to find out where power is lost. If there is power into the thermostat reset switch, but not out, see step 7.

7 If there is power into the thermostat reset switch, but not out, check to make sure that the water tank is not empty. If the tank is empty, the reset switch has probably opened up due to a low water level, go to ***Water Tank Does Not Fill***. If there is water in the tank, but no power out, push in on the reset switch button to see if it restores power. If power is restored, check to make sure that the switch is not opening up at the wrong temperature (the switch should not open up at normal water temperatures). If there is still no power through the switch after pushing the button, replace the thermostat reset switch.

Brewer Does Not Start When Brew Button is Pressed

1 If **Brewing** appears on the display, check for faulty wiring and connections between the universal control module (UCM) and the valves.

2 If **Brewing** does not appear on the display, check for a faulty universal control module (UCM).

Sensor Error Message

This error indicates a malfunction (open circuit) in the temperature sensor system. Once the malfunction is corrected, the error message must be cleared. To reset the brewer and return to normal operation, turn the toggle switch on the back of the brewer to the OFF position for 5 seconds, then back ON.

1 Check the resistance across the leads of the temperature sensor while it is disconnected from the universal control module (UCM). If an open circuit is measured (resistance above 200 k), replace the sensor.

2 If the sensor resistance is less than 200 k check the sensor wires for corrosion and reconnect them to the UCM. Afterward, if the error message comes back after resetting the control and power modules, replace the UCM.

Water Tank Overfills

1 Turn the toggle switch on the back of the brewer ON and OFF. If water continues to flow when the switch is in both positions, replace the inlet valve.

2 If water stops flowing to the water tank when the toggle switch is turned OFF and continues when the switch is turned back ON, remove the orange wire from the water probe on the tank. While power is ON, short the end of the orange wire to the metal surface on the outside of the tank. If the water tank stops filling when the orange wire is shorted to the tank, check for a corroded connection at the water probe.

3 If water does not stop flowing when the orange wire is shorted to the tank, check the tank ground connection and the continuity of the orange wire connecting to the universal control module (UCM). If both are OK, replace the UCM.

Water Tank Does Not Fill

IMPORTANT: No water or low water in the tank can cause the tank to overheat, resulting in the thermostat reset switch opening. If after correcting a tank fill problem there is no power to the control panel, push the reset switch button to reset.

1 Check to make sure the water supply is turned on. Check for a clogged water supply line, water filter or plugged inlet valve.

2 If there are no plugs in the water supply line, check for power across the inlet valve terminals. If power is being supplied, but there is no water flow, replace the inlet valve.

3 If power is not being supplied to the inlet valve, check the wires between the universal control module (UCM) and the inlet valve. Check for corroded connections.

4 If the wiring between the UCM and the inlet valve is OK, but there is no power to the inlet valve, remove the orange wire from the water tank probe. If the water tank starts to fill, replace the water probe. If the water tank does not start to fill, replace the UCM.

Coffee/Tea Too Strong

See *Dispenser Not Filled To Normal Level During Brewing*.

Dispenser Not Filled To Normal Level During Brewing

1 Check to make sure that the universal control module (UCM) brew, bypass* and dilution* levels are set properly.

2 Check to make sure that the flow rate and water pressure from the water supply line meet the minimum specifications for the brewer. See the *SPECIFICATIONS* section.

3 Check to make sure that the spray head is clean and free of debris. Clean or replace as needed. Also make sure that the spray head is correctly aligned and that the tubing is routed properly to allow for maximum water flow (no kinks).

4 Remove the brew basket and place a large container under the dump (brew) and dilution outlet points. Run a brew cycle and confirm that the dump (brew) valve, bypass* valve and dilution* valve open during the brew cycle. Check for flow through any exit point that is slow or non-existent. Not all valves open at the same time. If flow is restricted, check for obstructions in the related tubing or valve. If there are no obstructions, but flow through one particular valve is slow, it can be assumed that the particular valve is not opening all the way and should be replaced. If water does not flow at all through a particular valve during the brew cycle, check to make sure that power is being supplied to the valve in question. Replace any valve that is not opening when power is applied to the terminals. If power is not being supplied to the valve, check the wiring between the valve and the UCM. If the wiring is OK, replace the UCM.

*Some units do not have this function, see the *ELECTRICAL SCHEMATIC*.

Dispenser Overflows <u>All Of The Time</u>

1 Check to see if water continues to flow from the spray head, the bypass* outlet or the dilution* spout when the toggle switch is turned OFF. Replace any valve that is stuck open.
*Some units do not have this function, see the ***ELECTRICAL SCHEMATIC***.

2 If one or more of the valves mentioned in step 1 turns on when the toggle switch on the back is ON and turns off when the switch is OFF, replace the universal control module (UCM).

No Water/Tea Flows From Brewer During Brewing

1 Make sure that the water supply is turned on.

2 Check to see if the water in the tank is level with the water tank probe? If not, see ***Water Tank Does Not Fill***.

3 If the water tank is full, the water is hot and power is on, but NO water flows during a brew cycle, the problem is usually a bad universal control module (UCM). Run a brew cycle and check for power from the UCM to the dump (brew), bypass* and dilution* valves. If there is no power output, replace the UCM.
*Some units do not have this function, see the ***ELECTRICAL SCHEMATIC***.

Low Water Flow Warning

See ***Water Level Error Message***.

Water Level Error Message

Water level fill error or overflow. This error message occurs when the inlet valve solenoid has been on too long during initial fill or tank refill, See the ***ERROR CODES*** section for the maximum times allowed. Once the malfunction is corrected, the error message must be cleared. To reset the unit and return to normal operation, turn the toggle switch on the back of the brewer to the OFF position for 5 seconds, then back ON.

1 Check to make sure that the water filter is not clogged.

2 Check to make sure that the flow rate from the water supply line meets the minimum flow rate specifications for the brewer. Also check the water pressure. See the ***SPECIFICATIONS*** section.

3 Check for blockage at the inlet valve inlet and outlet and that it opens completely. Check for blockage in the tubing between the inlet valve and the water tank.

4 Check the water probe wire for an open condition or corroded connections.

5 If the probe connections are OK, cycle power to the unit by turning the rear toggle switch OFF, then ON. Check to see if power is applied to the inlet valve terminals. If power is applied to the terminals, but there is not water flow, replace the inlet valve.

6 Check for power from the universal control module (UCM) to the inlet valve. If the wiring is OK, replace the UCM.

Water Does Not Heat At All

- Check to see if the water level in the tank is in contact with the water level probe. If not, see *Tank Does Not Fill*. The water will not heat unless it is in contact with the probe.
- If the water heats, but is not hot enough, see *Water Not Hot Enough*.
- If **Ready to brew** appears on the display, but the water is not hot, check the resistance across the leads of the temperature sensor. If the resistance is less than 10 k and the water is not hot, replace the temperature sensor. If the sensor resistance is above 10 k when the water is cool, replace the universal control module (UCM).

If **Heating...** appears on the display, but the water is not hot, follow the steps below. The following steps are performed with the rear toggle switch in the ON position.

1 Check for power across the terminals of the heating element(s). If power is being supplied, remove the wires and check for an open heating element.

2 If there is no power to the element(s), trace the circuit back (using the ELECTRICAL SCHEMATIC) to the power cord to find out where power is lost. If there is power into the triac but not out, see the following step.

3 If there is power into a triac, but not out, check for power at the gate terminal. Also check the wire to A2 from the UCM. If the connections are good and power is being supplied to the triac, but there is no voltage out of A2, replace the triac. If power is not being supplied from the UCM, but **Heating...** appears on the display, check the wiring from the UCM to the triac. If the wiring is OK, replace the UCM.

Water Too Hot (Boiling or Excessive Steaming)

IMPORTANT: Before proceeding, make sure that the control panel temperature is adjusted to compensate for higher elevations. The factory setting is 204°F (96°C). Reduce the temperature setting two degrees for every 1000 ft. (300 m) of elevation above 2000 ft. (600 m).

1 If **Over Temp Sensor** or **Ready to Brew** appears on the display and the water is too hot, go to *Over Temp Sensor Error Message*.

2 If the display reads **Heating** constantly, first check to make sure that the temperature sensor is attached tightly to the tank and that heat sink compound was used. A properly mounted sensor should have a resistance of around 7 k when the water is hot. If not, replace the sensor.

3 Check to see if the universal control module (UCM) constantly has power output to the triac, regardless of the resistance of the temperature sensor. If so, the UCM is probably bad.

4 If the UCM is working properly, check for a bad triac.

Over Temp Sensor Error Message

This error message indicates that the universal control module (UCM) has detected a water overheating problem. The UCM is reading a water temperature in the tank above 210°F (99°C). If the water temperature is too hot, but **Heating...** appears on the display, see *Water Too Hot*. Once the malfunction causing the error is corrected, the error message must be cleared. To reset the brewer and return to normal operation, turn the toggle switch on the back of the brewer to the OFF position for 5 seconds, then back on.

1 Check for power at the gate terminal on the triac. If there is no power at the triac gate terminal but the heating elements are always on, replace the triac.

2 Turn off power to the brewer and allow water tank to cool. Once cool, turn power back on while monitoring the triac gate voltage. During normal operation, power should be applied to the gate terminal, then drop to below 1 Vac. The universal control module (UCM) should be replaced if power is applied to the triac gate constantly even though **Ready to brew** or **Over Temp Sensor** appears on the display.

3 If the UCM is operating normally, check for a false over-temp error caused by the temperature sensor. Check the resistance across the leads of the temperature sensor. If the resistance is less than 10 k when the water is cool, replace the temperature sensor.

System Fault Messages

An error message will appear on the screen in the event of a malfunction under the following conditions:

1 Water level overflow. This error indicates that either there is not enough incoming water flow/pressure or a water overflow condition (unit will stop functioning).

2 Break in temperature control circuit.

3 Excess temperature in heating tank.

If any of the errors below appear on the screen, turn off the main power toggle switch and call for service.

ERROR MESSAGE	WARNING DESCRIPTION	CAUSE
Water Level Error	Fill run error/Overflow	The water inlet valve has either been open for more than 10 minutes on the initial tank fill or has been open for more than 30 seconds* in normal operation.
Sensor Error	Open Probe	Break in the temperature thermistor circuit.
Over Temp. Error	Excess Temperature	The sensor is reading that temperature in the heating tank has risen above 210ºF (99°C).

* 120 seconds for models with water tanks larger than 2 gallons.

Wilbur Curtis Co., Inc. certifies that its products are free from defects in material and workmanship under normal use. The following limited warranties and conditions apply:

3 years, parts and labor, from original date of purchase on digital control boards
2 years, parts, from original date of purchase on all other electrical components, fittings and tubing
1 year, labor, from original date of purchase on all other electrical components, fittings and tubing

Additionally, Wilbur Curtis Co., Inc. warrants its grinding burrs for four (4) years from the date of purchase. Stainless steel components are warranted for two (2) years from the date of purchase against leaking or pitting. Replacement parts are warranted for ninety (90) days from the date of purchase or for the remainder of the limited warranty period of the equipment in which the component is installed.

All in-warranty service calls must have prior authorization. For authorization, call the Technical Support Department at 800-995-0417. Additional conditions may apply. Go to www.wilburcurtis.com to view the full product warranty information.

CONDITIONS & EXCEPTIONS

The warranty covers original equipment at time of purchase only. Wilbur Curtis Co., Inc., assumes no responsibility for substitute replacement parts installed on Curtis equipment that have not been purchased from Wilbur Curtis Co., Inc. Wilbur Curtis Co., Inc. will not accept any responsibility if the following conditions are not met. The warranty does not cover:

- **Adjustments and cleaning:** *The resetting of safety thermostats and circuit breakers, programming and temperature adjustments are the responsibility of the equipment owner. The owner is responsible for proper cleaning and regular maintenance of this equipment.*
- **Replacement of items subject to normal use and wear:** *This shall include, but is not limited to, spray heads, faucets, light bulbs, shear disks, "O" rings, gaskets, silicone tubing, silicone elbows, canister assemblies, whipper chambers and plates, mixing bowls, agitation assemblies and whipper propellers.*

The warranty is void under the following circumstances:

- **Improper operation of equipment:** *The equipment must be used for its designed and intended purpose and function.*
- **Improper installation of equipment:** *This equipment must be installed by a professional technician and must comply with all local electrical, mechanical and plumbing codes.*
- **Improper voltage:** *Equipment must be installed at the voltage stated on the serial plate supplied with this equipment.*
- **Improper water supply:** *This includes, but is not limited to, excessive or low water pressure and inadequate or fluctuating water flow rate.*
- **Damaged in transit:** *Equipment damaged in transit is the responsibility of the freight company and a claim should be made with the carrier.*
- **Abuse or neglect (including failure to periodically clean or remove lime accumulations):** *The manufacturer is not responsible for variation in equipment operation due to excessive lime or local water conditions. The equipment must be maintained according to the manufacturer's recommendations.*
- **Unauthorized repair or modification:** *This equipment must be serviced only by qualified service technicians, using factory specified parts to factory specifications.*
- **Modified/Missing Serial Tag:** *The serial number label (tag) must not be defaced or removed.*

Repairs and/or Replacements are subject to Curtis' decision that the workmanship or parts were faulty and the defects showed up under normal use. All labor shall be performed during regular working hours. Overtime charges are the responsibility of the owner. Charges incurred by delays, waiting time, or operating restrictions that hinder the service technician's ability to perform service is the responsibility of the owner of the equipment. This includes institutional and correctional facilities. Wilbur Curtis Co., Inc. will allow up to 100 miles, round trip, per in-warranty service call.

Return Merchandise Authorization (RMA): All claims under this warranty must be submitted to the Wilbur Curtis Technical Support Department prior to performing any repair work or return of this equipment to the factory. **All returned equipment must be properly re-packaged in the original carton and received by Curtis within 45 days following the issuance of a RMA.** No units will be accepted if they are damaged in transit due to improper packaging. **NO UNITS OR PARTS WILL BE ACCEPTED WITHOUT A RETURN MERCHANDISE AUTHORIZATION (RMA). THE RMA NUMBER MUST BE MARKED ON THE CARTON OR SHIPPING LABEL. All warranty claims must be submitted within 60 days of service. Invoices will not be processed or accepted without a RMA number. Any defective parts must be returned in order for warranty invoices to be processed and approved.** All in-warranty service calls must be performed by an authorized service agent. Call the Wilbur Curtis Technical Support Department to find an agent near you.