# G3 Tea Brewers




**TBP**
Polaris Low Profile Brewer
(Dispenser included)




**TB**
Tea Brewer
(Dispenser sold separately)




**STB**
Sweet Tea Brewer
(Dispenser sold separately)




**RTB**
Rotating Tea Brewer
(Dispensers sold separately)




**TBT**
Tall Tea Brewer
(Dispenser sold separately)

## Features

G3 Digital Control Module – Provides precise control for gourmet fine tuning with pulse-brewing, delay, and all critical brewing functions.

G3 Enhanced Tea Flavor and Clarity – With digital accuracy, two separate precision valves provide unsurpassed control over concentrate brewing and dilution cycles.

“Fast Brew” Option – Program selectable. Shortens brew time by allowing concentrate and dilution cycles to run at the same time.

Scroll-Through Precision Programming – Large, brightly lighted display communicates functions at a glance. Easily adjust time, volume, temperature, brew functions and more.

Cold Water Brew Lock-Out – Prevents brewing when water temperature is below set level.

## STB Features

Complete with electric pump. Program selectable for regular or sweet tea.

## RTB Features



Easily brew multiple teas from one brewer. Dual dilution spouts and rotating brew cone allows for brewing two teas without moving serving vessels.



# G3 Tea Brewers

**TBP**

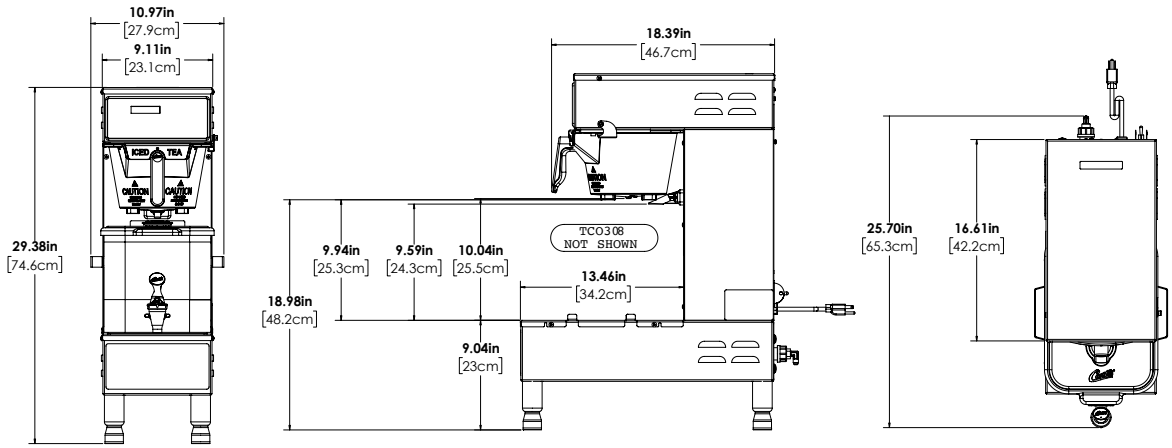


**TB**

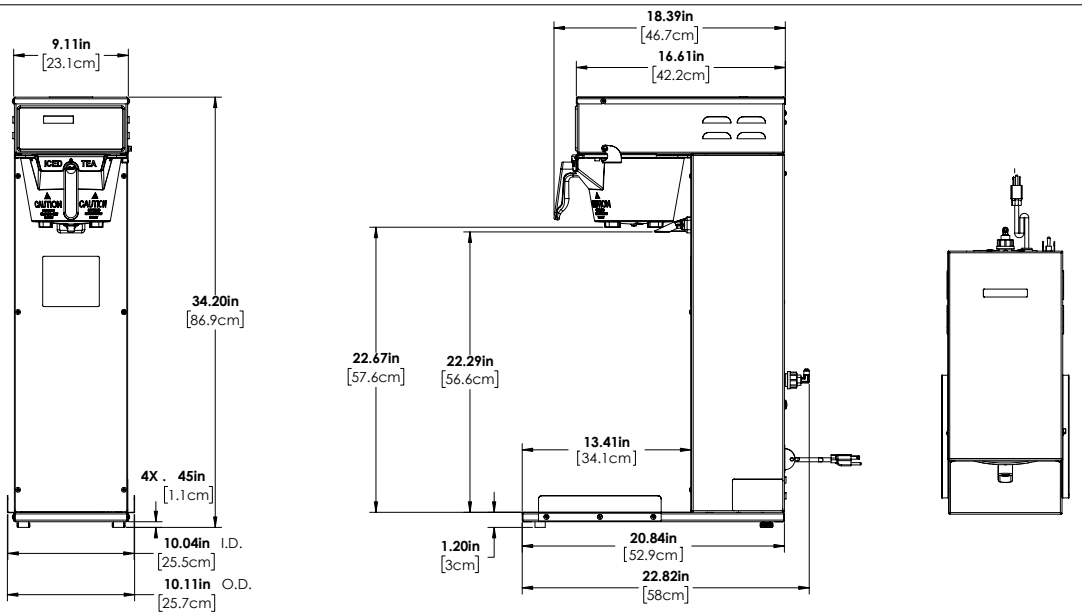


**STB**

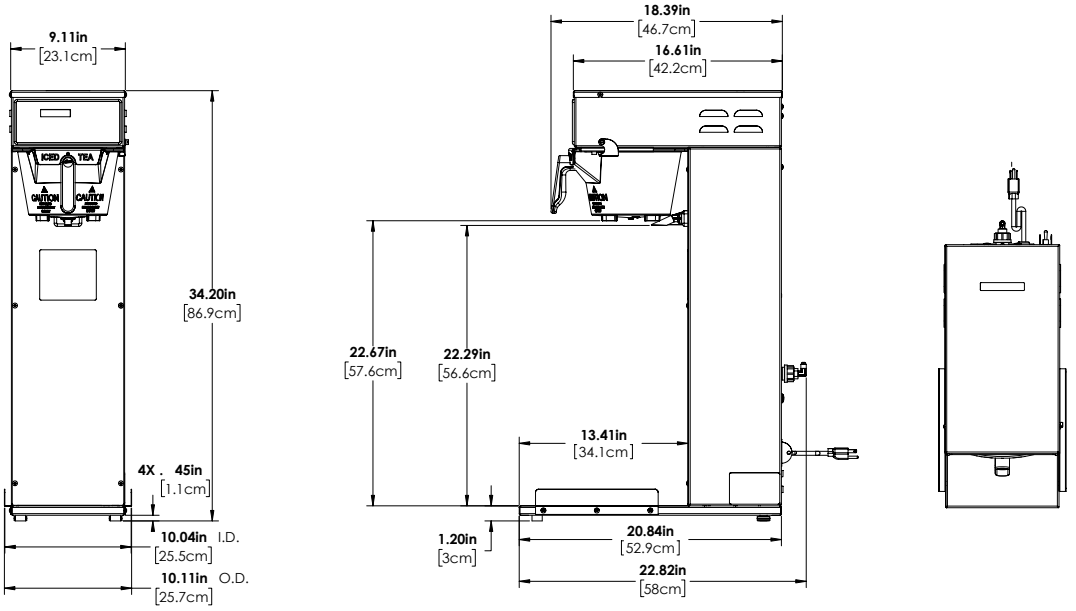

# G3 Tea Brewers

**RTB**

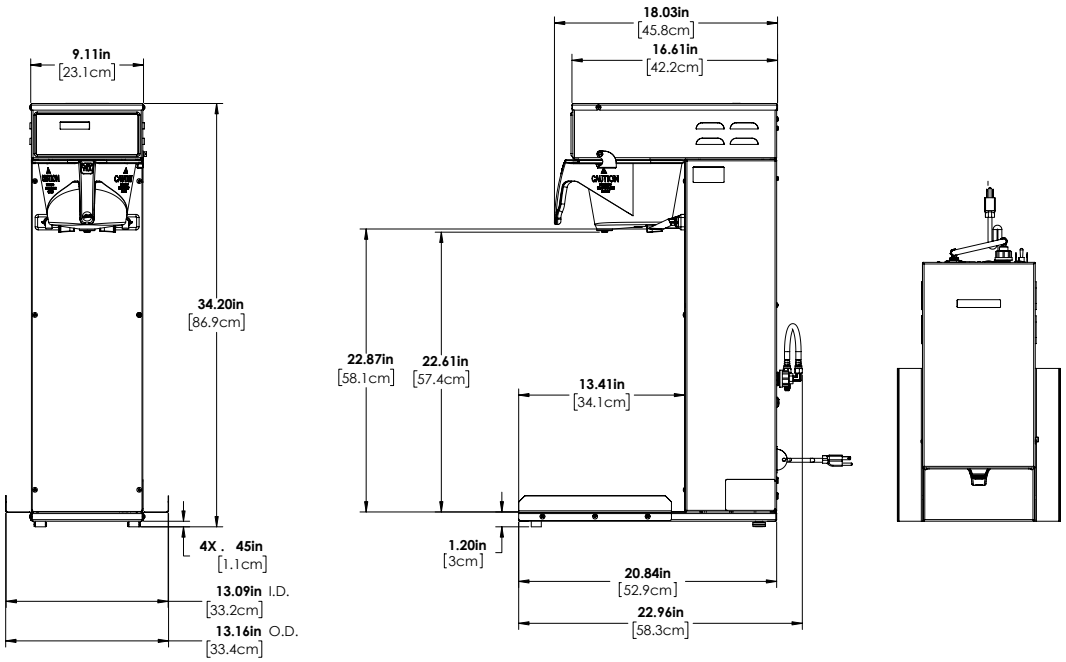


**TBT**

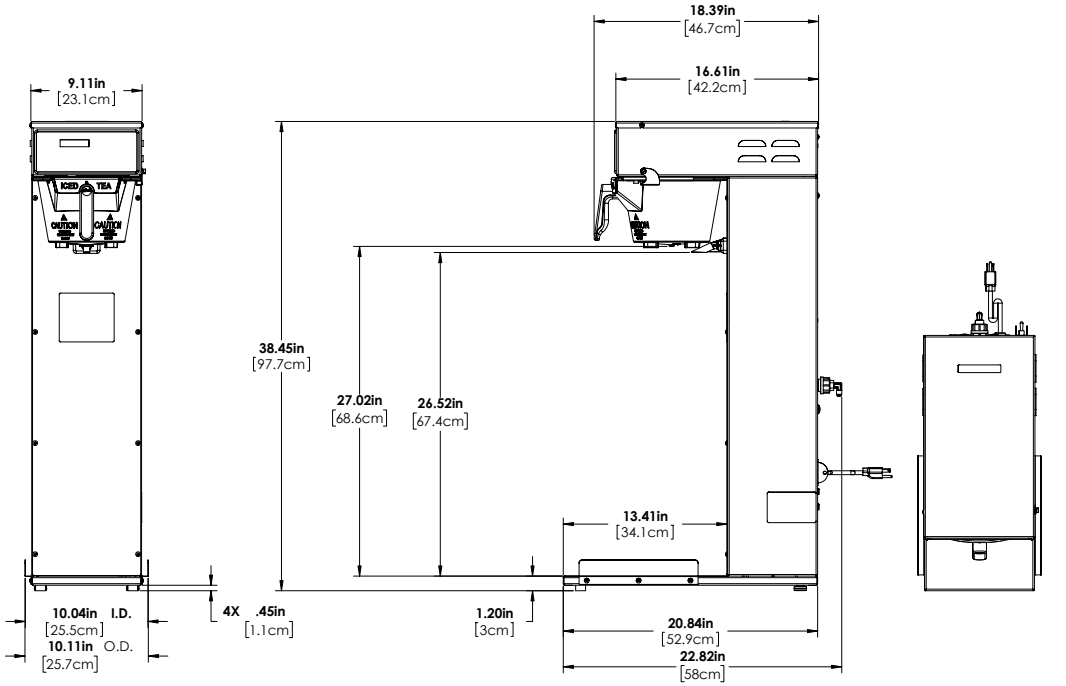

# G3 Tea Brewers

## Dimensions

| MODEL# | DESCRIPTION | HEIGHT x WIDTH x DEPTH | BREWED FILL WEIGHT | BREWED GAL/HR |
|---|---|---|---|---|
| TBP | G3 Tea Brewer, Polaris Low Profile | 29.38” x 10.97” x 25.70” | 144.2 lbs | 12.0 |
| TB | G3 Tea Brewer, Short Tea Brewer | 34.20” x 10.11” x 22.82” | 144.2 lbs. | 12.0 |
| STB | G3 Tea Brewer, Short Sweet Tea Brewer | 34.20” x 10.11” x 22.82” | 280.9 lbs. | 12.0 |
| RTB | G3 Tea Brewer, Rotating Basket Tea Brewer | 34.20” x 13.16” x 22.96” | 280.9 lbs. | 12.0 |
| TBT | G3 Tea Brewer, Tall Tea Brewer | 38.45” x 10.11” x 22.82” | 144.2 lbs. | 12.0 |

## Utility Requirements

| | ELECTRICAL | | | | | | | WATER | | | |
|---|---|---|---|---|---|---|---|---|---|---|---|
| MODEL# | PHASE | VOLTS | AMPS | HEAT CONFIG | WIRE | WATTS | HERTZ | CONNECTOR | PRESSURE | MINIMUM FLOW RATE | TANK VOL. |
| TBP | 1 PH | 120V | 13.8A | 1 x 1600W | 2W+G | 1650W | 50/60Hz | 1/4” Flare | 20 - 90 psi | 1.0 GPM | 1.6 gal. |
| TB | 1 PH | 120V | 13.8A | 1 x 1600W | 2W+G | 1650W | 50/60Hz | 1/4” Flare | 20 - 90 psi | 1.0 GPM | 1.6 gal. |
| STB | 1 PH | 120V | 13.8A | 1 x 1600W | 2W+G | 1650W | 50/60Hz | 1/4” Flare | 20 - 90 psi | 1.0 GPM | 1.6 gal. |
| RTB | 1 PH | 120V | 13.8A | 1 x 1600W | 2W+G | 1650W | 50/60Hz | 1/4” Flare | 20 - 90 psi | 1.0 GPM | 1.6 gal. |
| TBT | 1 PH | 120V | 13.8A | 1 x 1600W | 2W+G | 1650W | 50/60Hz | 1/4” Flare | 20 - 90 psi | 1.0 GPM | 1.6 gal. |



WARNING - These products can expose you to chemicals including Acrylamide and Bisphenol A (BPA), which are known to the State of California to cause cancer and birth defects or other reproductive harm. For more information visit www.P65Warnings.ca.gov