GAMCO
Commercial Restroom Accessories
Technical Data

HAT AND COAT STRIP

HCS SERIES

HCS-1 for strip, 24" (610mm), 3 holders
HCS-2 for strip, 36" (914mm), 4 holders
HCS-3 for strip, 48" (1219mm), 5 holders



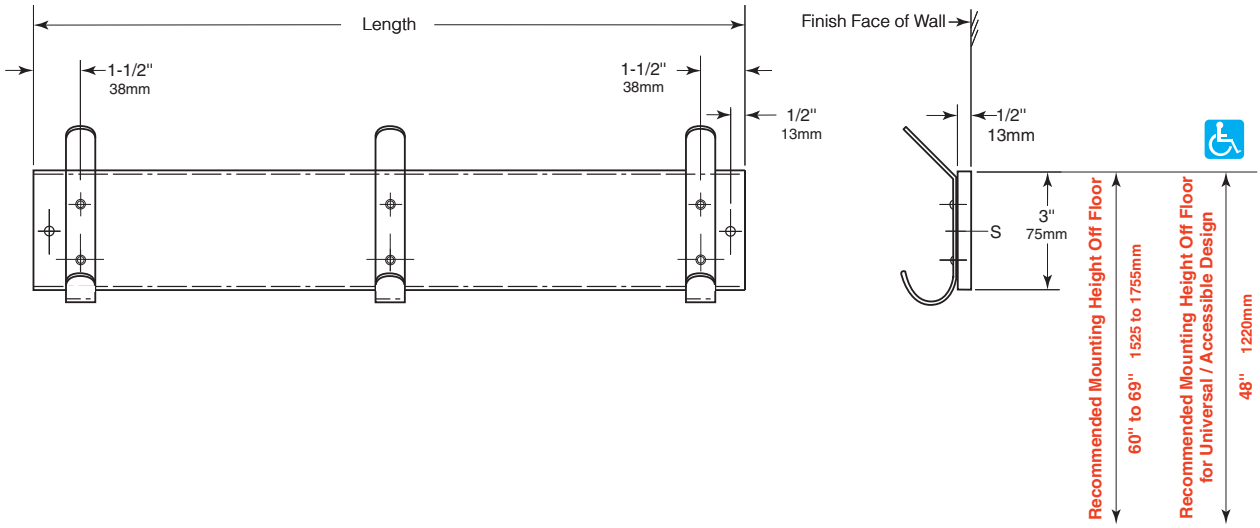

CONSTRUCTION:

Hooks — 18-8, type-304, 12-gauge (2.8mm) stainless steel with satin finish. Each hook attached to mounting strip with two rivets.

Mounting Strip — 18-8, type-304, 18-gauge (1.2mm) stainless steel with satin finish.

INSTALLATION:

Mount unit on wall with screws (not furnished by manufacturer). For plaster or dry wall construction, provide concealed backing to comply with local building codes, then secure unit with screws. For other wall surfaces, provide fiber plugs or expansion shields for use with screws or provide 1/8" (3mm) toggle bolts or expansion bolts.

Hat and Coat Strip shall be Model_____ (insert model number) of Gamco Commercial Restroom Accessories, One Gamco Place, Durant, OK, 74701-1910

The illustrations and descriptions herein are applicable to production as of the date of this Technical Data Sheet.
The manufacturer reserves the right to, and does from time to time, make changes and improvements in designs and dimensions.

Revised 12/23/15 Printed in U.S.A.
© 2015 by Gamco Commercial Restroom Accessories