CONVOTHERM®

Combi oven

Project _____

Item _____

Quantity _____

FCSI section _____

Approval _____

Date _____

C4eD 20.10 GS-N

Convotherm 4

easyDial

- 20.10
  20 slide rails
- Gas
- Injection/Spritzer
- Right-hinged door



Key Features

- Advanced Closed System+ (ACS+) cooking methods: Steam, combi-steam, hot air
- Advanced Closed System+ (ACS+) with extra functions:
  - Crisp&Tasty - 5 moisture-removal settings
  - BakePro – 5 levels of traditional baking
  - HumidityPro - 5 humidity settings
  - Controllable fan – 5 speed settings
- easyDial: all functions are set in one operating level
- Cleaning Management - ConvoClean: Fully automatic cleaning system, optional single-dose dispensing
- HygieniCare
- TriColor indicator ring – indicates the current operating status
- Steam generated by injecting water into the cooking chamber
- Right-hinged door

Standard features

- Cooking methods:
  - Steam (86-266°F) with guaranteed steam saturation
  - Combi-steam (86-482°F) with automatic humidity adjustment
  - Hot air (86-482°F) with optimized heat transfer
- easyDial user interface controls:
  - Convotherm-Dial (C-Dial) central control unit
  - Digital display
- Climate Management
  - Advanced Closed System+ (ACS+), HumidityPro, Crisp&Tasty
- Quality Management
  - Airflow Management, BakePro, multi-point core temperature probe
- Production Management
  - 99 cooking profiles each containing up to 9 steps
  - HACCP data storage
  - USB port
  - Rethermalization function – products are rethermalized at the highest level of quality
  - Preheat and cool down function

Standard features

- Cleaning Management - ConvoClean: Fully automatic cleaning system, optional single-dose dispensing
- HygieniCare:
  - Hygienic handles
- Design:
  - Right-hinged unit door with safety lock, sure-shut function, and venting position
  - Steam generated by injecting water into the cooking chamber
  - Adjustable feet with adjustment range between 4 inches and 5 inches
  - Multi-point core temperature probe
  - Integrated recoil hand shower

GAS-FIRED c UL us LISTED MH49645

NSF

Welbilt Inc.
18301 St. Clair Avenue
Cleveland, OH 44110 USA

Phone 1-800-338-2204

www.convotherm.com

WELBILT

C4eD 20.10 GS-N

Convotherm 4

easyDial

- 20.10
  20 slide rails
- Gas
- Injection/Spritzer
- Right-hinged door





Key Features

- Advanced Closed System+ (ACS+) cooking methods: Steam, combi-steam, hot air
- Advanced Closed System+ (ACS+) with extra functions:
  - Crisp&Tasty - 5 moisture-removal settings
  - BakePro – 5 levels of traditional baking
  - HumidityPro - 5 humidity settings
  - Controllable fan – 5 speed settings
- easyDial: all functions are set in one operating level
- Cleaning Management - ConvoClean: Fully automatic cleaning system, optional single-dose dispensing
- HygieniCare
- TriColor indicator ring – indicates the current operating status
- Steam generated by injecting water into the cooking chamber
- Right-hinged door

Options

- Disappearing door – more space and added safety (see page 3)
- Corrections package
- Ethernet port (LAN)
- Available in various voltages
- Sous-vide probe, external connection
- Core temperature probe, external connection (internal core probe standard)

Accessories

- ConvoLink – HACCP and cooking-profile management PC software
- Signal Tower
- Banquet system (optionally as a package or individually): Plate loading trolley, loading trolley, thermal cover

Accessories and services by partners

- Cleaning chemicals for the fully automatic ConvoClean+ cleaning system (multiple-dose and single-dose dispensing)
- Water filtration and reverse osmosis systems and replacement filters
- Installation services available - details in AutoQuotes - availability may vary by region
- Cooking, baking, and roasting cookware

9758322_07 ENG_USA 06/21, © 2021 Welbilt. Please note that the product is being continuously improved and that, as a result, these specifications are subject to change without notice.

Front view

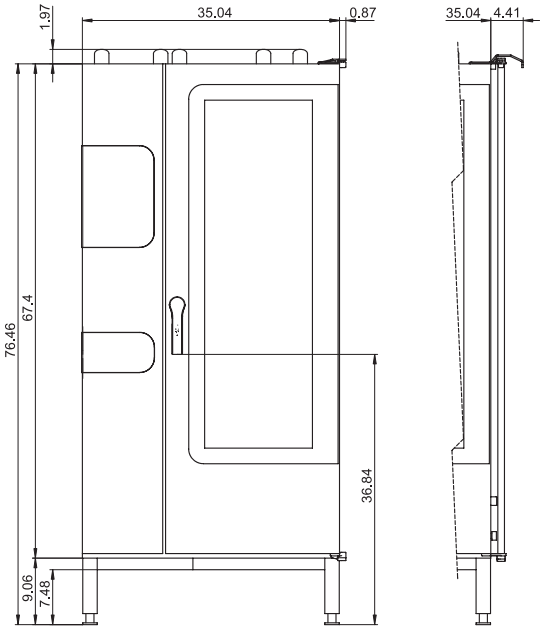

Connection points, bottom of unit

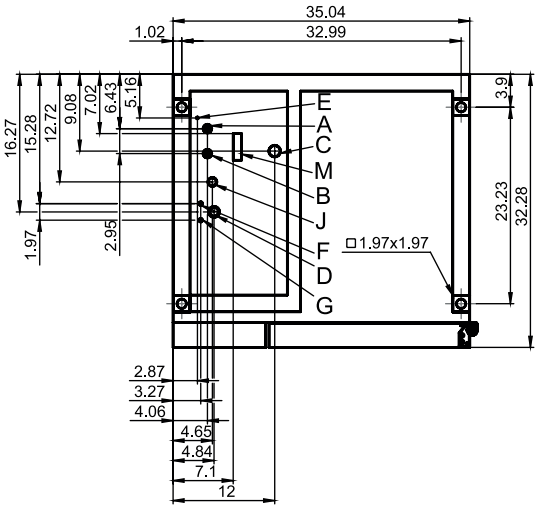

A Water connection (for water injection)
B Water connection (for cleaning, recoil hand shower)
C Drain connection (2" I. D.)
D Electrical connection
E Equipotential bonding
F Rinse-aid connection
G Cleaning-agent connection
H Air vent (2" I. D.)
I Dry air intake (2" I. D.)
J Gas connection
K Exhaust outlet (2" I.D.)
M Safety overflow 3.2" x 1"

View from above with wall clearances

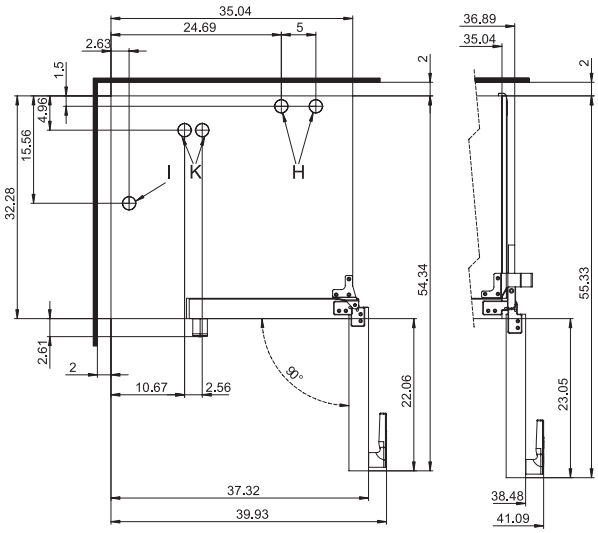

(disappearing door optional)

Installation requirements

Max. absolute appliance inclination during operation*	max. 2° (3.5%)
Clearance from heat sources	min. 20 "
Recommended clearance for servicing on the left side of the unit	min. 20 "

* Adjustable appliance feet as standard.

Dimensions and weights

Dimensions including packaging	
Width x height x depth	46.7" x 85.0" x 39.0"
Weight	
Net weight without options* / accessories	591 lbs
Packaging weight	88 lbs
Safety clearances**	
Rear	2 "
Right (right-hinged door)	2 "
Right (disappearing door pushed back)	6 "
Left (see installation requirements)	2 "
Top***	39"

* Max. weight of options: 33 lbs.

** Required for the unit to work properly.

*** Depends on the type of exhaust system and the ceiling's characteristics.

C4eD 20.10 GS-N

Loading capacity

Max. number of food containers	
[Unit has 20 slide rails; rail spacing 2.68" max.]	
Steam table pans (12"x20"x1")	40
Steam table pans (12"x20"x2.5")	20
Wire shelves, half size (12"x20")	20
Sheet pans, half size (12"x20")	20
Frying baskets, half size (12"x20")	20
Plates (optional plate banquet trolley)	50
Max. loading weight	
Per combi oven	220 lbs
Per shelf level	33 lbs

Electrical supply

120V 1PH 60Hz *	
Rated power consumption	1.0 kW
Rated current	8.3 A
Power supply wire gauge	14 AWG
Conductor insulation rating	194°F / 90 °C

* Prepared for connection to an energy optimizing system.

Electrical supply must be connected to dedicated permanent supply line. Any Ground fault or residual current protection must be rated at least 20mA. Do not connect to residential GFI receptacles as they will cause nuisance trips of the device.

Gas specifications

Type of gas	Natural gas, propane
Gas connection	3/4" NPT
Flow pressure	
Natural gas	7 (5.5 to 14)" WC
Propane	11 (11 to 14)" WC
Heat output	For Natural gas, propane
Convection burner	143000 BTU/h

9758322_07 ENG_USA 06/21, © 2021 Welbilt. Please note that the product is being continuously improved and that, as a result, these specifications are subject to change without notice.

Water connection

Water supply	
Water supply	Two hoses 1/2" inner diameter with one side 3/4" GHT-F to 3/4" BST The unit is designed for a permanent hookup to the water supply that uses a connecting hose with a minimum diameter of 1/2".
Flow pressure	22 - 87 psi / 1.5 - 6 bar
Drain	
Drain version	Naturally ventilated pipe to open pan or drain/channel
Type	2" inside diameter (comes elbow-shaped as standard)
Slope for drainpipe	min. 3.5% (2°)

Water quality

Water connection A* for water injection	
General requirements	Drinking water, typically treated water (install a water treatment system if necessary)
TDS	70 - 125 ppm
Hardness	70 - 125 ppm (4 - 7 gpg)
Water connection B* for cleaning, recoil hand shower	
General requirements	Drinking water, typically untreated water
TDS	70 - 360 ppm
Hardness	70 - 360 ppm (4 - 21 gpg)
Water connections A, B*	
pH value	6.5 - 8.5
Cl^- (chloride)	max. 60 ppm
Cl_2 (free chlorine)	max. 0.2 ppm
SO_4^{2-} (sulfate)	max. 150 ppm
Fe (iron)	max. 0.1 ppm
SiO_2 (silica)	max. 13 ppm
NH_2Cl (monochloramine)	max. 0.2 ppm
Temperature	max. 104°F / max. 40°C

* Please refer to the connection points diagram, p. 2.

NOTICE: The owner/operator/purchaser must ensure that the water quality requirements are met. Otherwise the unit warranty is void.

Water consumption

Water connection A*	
Average consumption for cooking	2.1 gph
Required flow rate	0.2 gpm
Water connections A, B	
Average consumption for cooking**	3.2 gph
Required flow rate	4.0 gpm

* Values intended as guide for specifying the water treatment system.

** Incl. water required for cooling the wastewater.

NOTICE: See connection positions diagram, p. 2.

Emissions

Heat loss	
Latent	6700 BTU/h
Sensible	10500 BTU/h
Drain temperature	max. 140°F / 60°C
Decibel rating	max. 70 dBA