USER GUIDE & SERVICE MANUAL

Model: U-3036WCWCINT-00B

USER GUIDE & SERVICE MANUAL

Click on any section below to jump directly there

Table of Contents

Intro

Safety

Safety and Warning

Disposal And Recycling

Installation

Environmental Requirements

Electrical

Cutout Dimensions

Product Dimensions

Side by Side Installation

Anti-Tip Bracket

General Installation

Integrated Panel Dimensions

Integrated Grille Dimensions

Integrated Panel Installation

Grille / Plinth Installation

Door Swing

Door Stop

Door Adjust

Maintenance

Cleaning

Cleaning Condenser

Extended Non-Use

Operating Instructions

First Use

Control Operation

Sabbath Mode

Airflow and Product Loading

U-Line Wine Guide

Recommended Wine Storage

Service

Wine Rack Installation

Troubleshooting

Wire Diagram

Product Liability

Warranty Claims

Parts

R600a Specifications

System Diagnosis Guide

Compressor Specifications

Troubleshooting Extended

Control Operation - Service

Thermistor

Defrost

Remove Fan and Cover

Warranty

WELCOME TO U-LINE

Congratulations on your U-Line purchase. Your product comes from a company with over five decades of premium modular ice making, refrigeration, and wine preservation experience. U-Line creates products focused on functionality, style, and inspired innovations — paying close attention to even the smallest details. Applications include residential, outdoor, ADA height compliant, marine, and commercial. Complete product categories include Beverage Centers, Wine Refrigerators, Ice Machines, Refrigerators, Freezers, and Dispensers.

Our advanced refrigeration systems, large and flexible capacities, and Built-In to Stand Out® clean integrated look allow you to preserve the right product, in the right place, at the right temperature. Since 2014, U-Line has been part of the Middleby family of brands. All products are designed, engineered, and assembled in Milwaukee, Wisconsin, USA, and select products are available worldwide. U-Line - RIGHT PRODUCT. RIGHT PLACE. RIGHT TEMPERATURE®.

PRODUCT INFORMATION

Looking for additional information on your product? User Guides, Spec Sheets, CAD Drawings, Compliance Documentation, and Product Warranty information are all available for reference and download at u-line.com.

PROPERTY DAMAGE / INJURY CONCERNS

In the unlikely event property damage or personal injury is suspected related to a U-Line product, please take the following steps:

1. U-Line Customer Care must be contacted immediately at +1.414.354.0300.
2. Service or repairs performed on the unit without prior written approval from U-Line is not permitted. If the unit has been altered or repaired in the field without prior written approval from U-Line, claims will not be eligible.

GENERAL INQUIRIES

U-Line Corporation
8900 N. 55th Street
Milwaukee, Wisconsin 53223 USA
Monday - Friday 8:00 am to 4:30 pm CST
T: +1.414.354.0300
Email: sales@u-line.com
u-line.com

SERVICE & PARTS ASSISTANCE

Monday - Friday 8:00 am to 4:30 pm CST
T: +1.800.779.2547
Service Email: onlineservice@u-line.com
Parts Email: onlineparts@u-line.com

CONNECT WITH US

blog

Designed, engineered and assembled in WI, USA

Safety and Warning

NOTICE

Please read all instructions before installing, operating, or servicing the appliance.

Use this appliance for its intended purpose only and follow these general precautions with those listed throughout this guide:

SAFETY ALERT DEFINITIONS

Throughout this guide are safety items labeled with a Danger, Warning or Caution based on the risk type:

⚠ DANGER

Danger means that failure to follow this safety statement will result in severe personal injury or death.

⚠ WARNING

Warning means that failure to follow this safety statement could result in serious personal injury or death.

⚠ CAUTION

Caution means that failure to follow this safety statement may result in minor or moderate personal injury, property or equipment damage.

⚠ DANGER

This unit contains R600a (Isobutane) which is a flammable hydrocarbon. It is safe for regular use. Do not use sharp objects to expedite defrosting. Do not service without consulting the "R600a specifications" section included in the User Guide. Do not damage the refrigerant circuit.

⚠ WARNING

Service must be done by factory authorized service personnel. Any parts shall be replaced with like components. Failure to comply could increase the risk of possible ignition due to incorrect parts or improper service.

Disposal and Recycling

DANGER

RISK OF CHILD ENTRAPMENT. Before you throw away your old refrigerator or freezer, take off the doors and leave shelves in place so children may not easily climb inside.

If the unit is being removed from service for disposal, check and obey all federal, state and local regulations regarding the disposal and recycling of refrigeration appliances, and follow these steps completely:

1. Remove all consumable contents from the unit.

2. Unplug the electrical cord from its socket.

3. Remove the door(s)/drawer(s).

Environmental Requirements

This model is intended for indoor/interior applications only and is not to be used in installations that are open/ exposed to natural elements.

This unit is designed to operate between 50°F (10°C) and 100°F (38°C). Higher ambient temperatures may reduce the unit's ability to reach low temperatures and/or reduce ice production on applicable models.

For best performance, keep the unit out of direct sunlight and away from heat generating equipment.

In climates where high humidity and dew points are present, condensation may appear on outside surfaces. This is considered normal. The condensation will evaporate when the humidity drops.

⚠ CAUTION

Damages caused by ambient temperatures of 40°F (4°C) or below are not covered by the warranty.

Electrical

⚠ WARNING

SHOCK HAZARD — Electrical Grounding Required. Never attempt to repair or perform maintenance on the unit until the electricity has been disconnected.

Never remove the round grounding prong from the plug and never use a two-prong grounding adapter.

Altering, cutting or removing power cord, removing power plug, or direct wiring can cause serious injury, fire, loss of property and/or life, and will void the warranty.

Never use an extension cord to connect power to the unit.

Always keep your working area dry.

NOTICE

Electrical installation must observe all state and local codes. This unit requires connection to a grounded (three-prong), polarized receptacle that has been placed by a qualified electrician.

The unit requires a grounded and polarized 115 VAC, 60 Hz, 15A power supply (normal household current). An individual, properly grounded branch circuit or circuit breaker is recommended. A GFCI (ground fault circuit interrupter) is usually not required for fixed location appliances and is not recommended for your unit because it could be prone to nuisance tripping. However, be sure to consult your local codes.

See CUTOUT DIMENSIONS for recommended receptacle location.

Cutout Dimensions

PREPARE SITE

Your U-Line product has been designed exclusively for a built-in installation. When built-in, your unit does not require additional air space for top, sides, or rear. However, the front grille must NOT be obstructed.

The product is designed and manufactured for seamless integration in the specified cutout opening shown, which requires precise measurements. The opening must be square and plumb front to back. Although not required, you may choose to increase the overall cutout width for ease of installation.

The Modular 3000 Series units are engineered with a variety of adjustment features to help ensure a seamless installation. Adjustable doors, leveling legs and grille will assist in fine tuning the installation.

All 3000 Series models fully integrate into overlay/face frame, inset or European/frameless cabinet styles and install seamlessly into standard 24" (610 mm) depth cabinet base.

⚠ CAUTION

Unit can NOT be installed behind a closed cabinet door.

CUTOUT DIMENSIONS

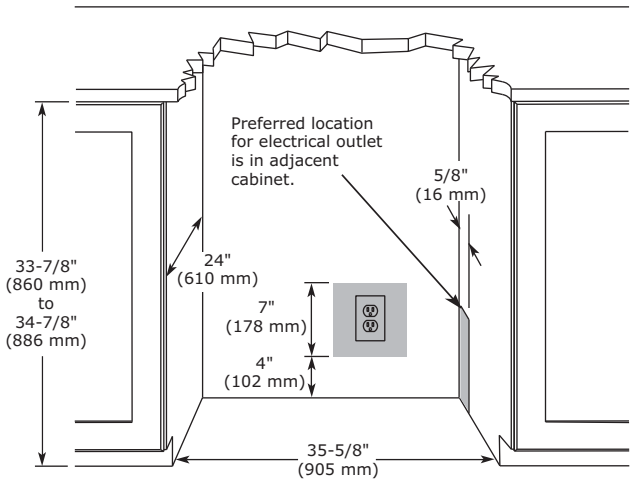

Metric measurements rounded and optimized.

Product Dimensions

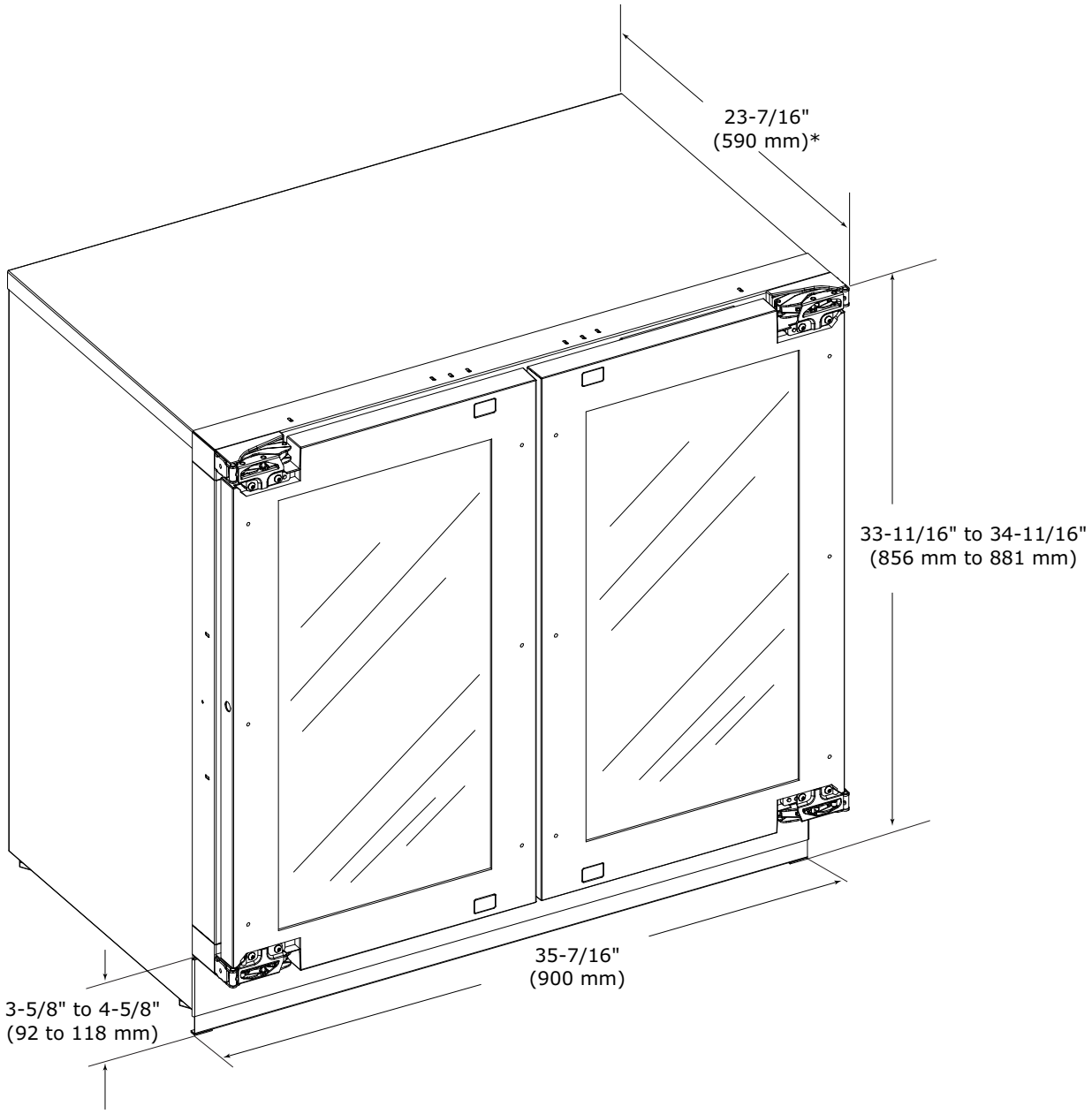

*Includes 3/4" (20 mm) integrated panel

Side-by-Side Installation

OTHER SITE REQUIREMENTS

Side-by-Side Installation

Units must operate from separate, properly grounded electrical receptacles placed according to each unit's electrical specifications requirements.

Cutout width for a side-by-side installation is the total of the widths listed under Cutout Dimensions in each unit's Installation Guide. Each door can be opened individually (one at a time) without interference.

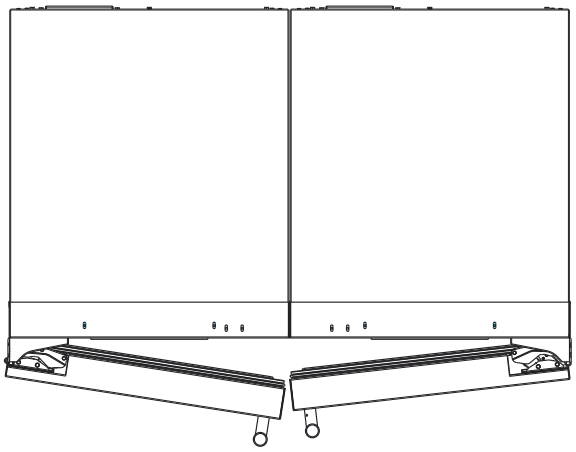

However, to ensure unobstructed door swing (opening both doors at the same time), 1/4" (6.4 mm) of space needs to be maintained between the units.

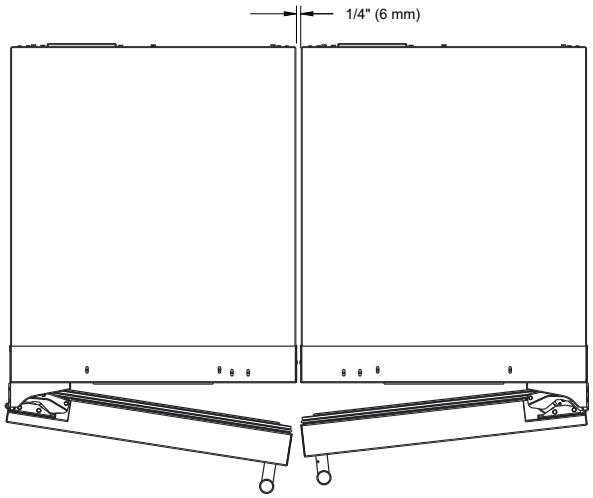

Hinge-by-Hinge Installation (Mullion)

When installing two units hinge-by-hinge, 13/16" (22 mm) is required for integrated models. Additional space may be needed for any knobs, pulls or handles installed.

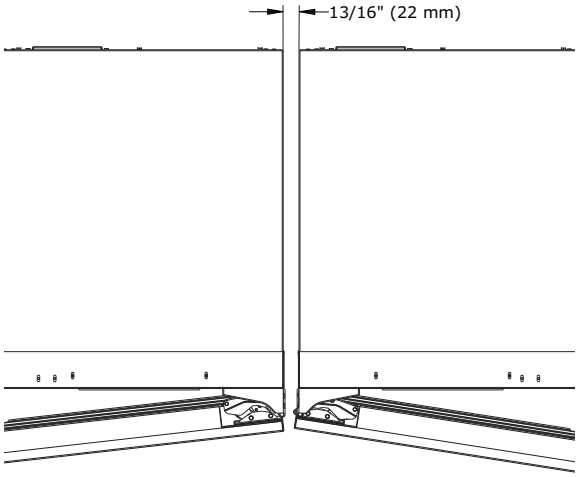

Stainless steel models which include the standard stainless handle will require 4-9/16" (116 mm) to allow both doors to open to 90° at the same time.

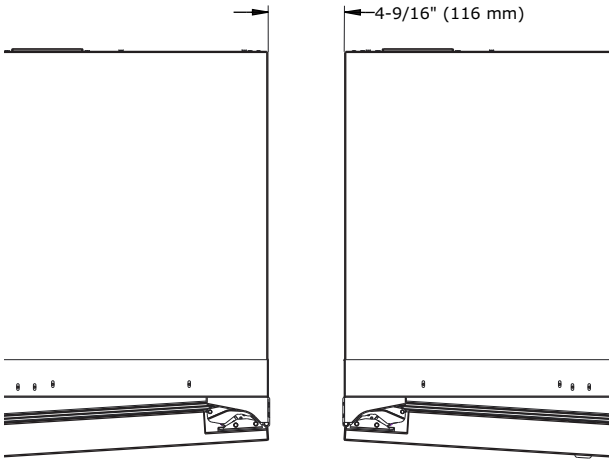

Anti-Tip Bracket

⚠ CAUTION

The anti-tip bracket must be installed to prevent the unit from tipping when doors are fully opened or excess weight is placed on the front of the unit.

The anti-tip brackets have multiple mounting options. Mounting will depend on your particular cabinet configuration. Locate 6 #8x5/8" screws included with your unit.

TOP MOUNT

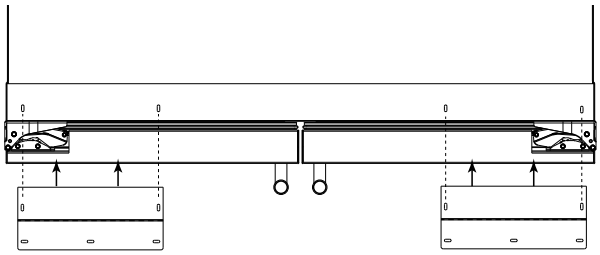

For ease of installation the anti-tip brackets are pre-installed in the top mount position.

1. Completely slide the unit into its position in the opening. Be certain unit height is properly adjusted. (See GENERAL INSTALLATION).

2. Open both doors completely. Make certain doors clear surrounding cabinetry.

3. Using a 3/32" (2.50 mm) drill bit, drill 6 pilot holes (3 for each bracket) 5/8" (16 mm) deep into bottom of countertop. Use the anti-tip brackets as a template.

4. Install 6 #8x5/8" screws into the plate using a #2 Phillips head screwdriver.

SIDE MOUNT

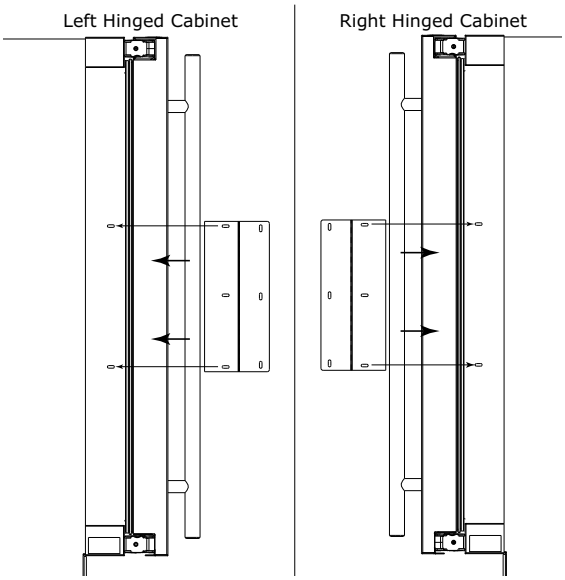

Side mount position is used when you are unable to mount the brackets to the underside of your countertop.

1. Remove the pre-installed anti-tip brackets from the top mount position and align to the side mounting holes on the hinge side of your model as shown.

2. Reinstall 2 screws into each anti-tip bracket, mounting the bracket to your unit.

3. Completely slide the unit into its position in the opening. Be certain unit height is properly adjusted. (See GENERAL INSTALLATION).

4. Open both doors completely to gain access to the anti-tip brackets. Make certain doors clear surrounding cabinetry.

5. Using a 3/32" (2.50 mm) drill bit, drill 6 pilot holes (3 for each bracket) 5/8" (16 mm) deep into cabinetry frame using the anti-tip brackets as a template.

6. Install 6 #8x5/8" screws into the plate using a #2 Phillips head screwdriver.

General Installation

1. Use a level to confirm the unit is level. Level should be placed along top edge and side edge as shown.

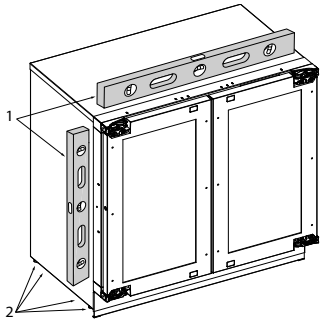

2. If the unit is not level, remove grille and adjust legs as necessary. Use included tool to adjust the height of the rear legs.

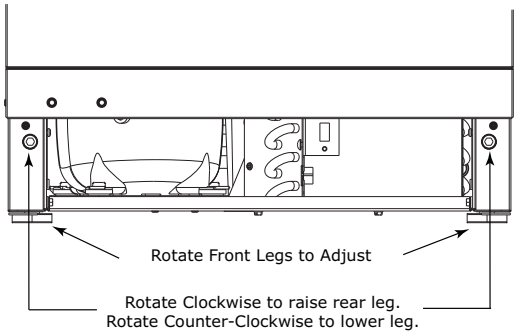

3. Confirm the unit is level after each adjustment and repeat the previous steps until the unit is level.

INSTALLATION TIP

If the room floor is higher than the floor in the cutout opening, adjust the rear legs to achieve a total unit rear height of 1/8" (3 mm) less than the opening's rear height. Shorten the unit height in the front by adjusting the front legs. This allows the unit to be gently tipped into the opening. Adjust the front legs to level the unit after it is correctly positioned in the opening.

INSTALLATION

1. Plug in the power/electrical cord.

2. Gently push the unit into position. Be careful not to entangle the cord.

3. Re-check the leveling, from front to back and side to side. Make any necessary adjustments. The unit's top surface should be approximately 1/8" (3 mm) below the countertop.

4. Install the anti-tip bracket.

5. Remove the interior packing material and wipe out the inside of the unit with a clean, water-dampened cloth.

Integrated Panel Dimensions

Metric measurements rounded and optimized.

INTEGRATED FRAME

NOTICE

Due to differences in surrounding cabinetry the panel may not perfectly align with door. The procedure below is designed to provide a finished integrated panel that seamlessly integrates with surrounding cabinetry.

Panel Preparation

A full integrated door panel completely covers the door frame and provides a built-in appearance.

NOTICE

The door panel must not weigh more than 20 lbs (10 kg).

It is important to ensure that all drilled holes are drilled to the correct depth in order to avoid splits in the wood when hardware is installed.

1. Cut the panels to the dimensions listed in the diagram below. Unit requires two complete panels.

2. Optional: Stain or finish panel to desired stain or color. Be sure to closely follow the instructions provided by the manufacturer.

3. Optional: Install handles and hardware.

NOTICE

When applying an integrated frame to a unit, ensure that both sides are finished in order to prevent warping. In some overlay panel/frame installations, the panel may be visible through the glass while the door is open.

Integrated Frame Dimensions

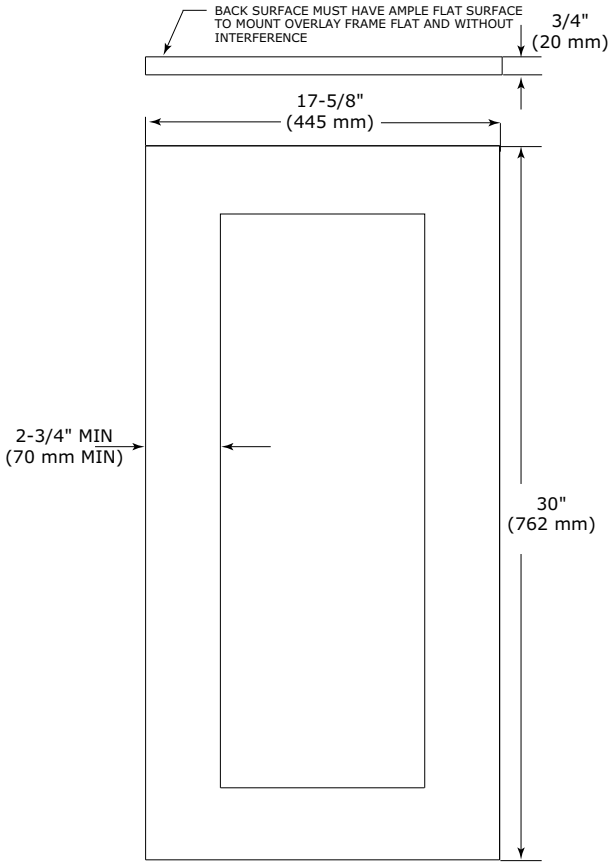

Integrated Frame

HANDLELESS INTEGRATED FRAME

The following procedure is designed to provide a finished, handleless frame for an 18" (450 mm) door that seamlessly integrates with its surrounding cabinetry. Prepare two 18" (450 mm) panels for 36" (900 mm) units.

NOTE: Many cabinet manufacturers provide a ready solution for a handleless, integrated design that can be easily applied to your U-Line 3000 Series model. Consult your cabinet manufacturer for applicable design and installation details. The cabinet manufacturer's solution to this design and integration detail will often result in an integrated frame solution wherein the size of the panel/ frame may result in a height dimension taller than what we specify. This can be achieved provided the additional height is positioned above the appliance door.

NOTICE

The integrated frame aligns with the surrounding cabinetry and, due to differences in cabinetry, may not align perfectly with the door.

The appliance will need up to 34-1/2" (876 mm) to the underside of the counter to leave room for leveling adjustments.

A single prepared overlay with insert must not weigh more than 20 lbs (10 kg).

Integrated Frame Preparation

1. Cut the main panels to the dimensions below. For details, see the drawings on the next page. Unit requires two complete panels.

Main panel width	Main panel height
17-5/8" (445 mm)	28-13/16" (732 mm)

2. Create the top design for the handleless feature and the 1/8" (3 mm) notch for the insert(s) indicated on the Top Detail drawing, on the next page.
3. Prepare the insert(s) that will back up the handleless design. **Wooden Insert –** Cut 1/8" (3 mm) thick wooden insert(s) to the appropriate dimensions below.

Wooden insert width	Wooden insert height
17-5/8" (445 mm)	3-1/2" (89 mm)

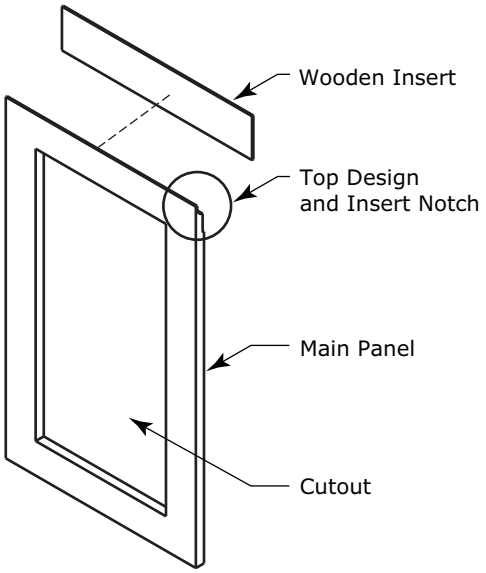

Integrated Frame

4. Optional: Stain or finish frame and wooden insert to desired stain or color. Be sure to closely follow the instructions provided by the manufacturer.

NOTICE

If finishing panel or wooden insert, all sides must be finished to prevent warping.

5. Attach the insert to the frame. Wood glue or equivalent adhesive should be used to attach insert to frame.

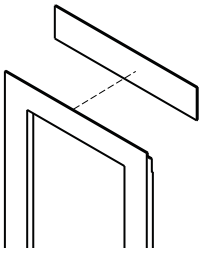

Attach Wooden Insert

Handleless Integrated Frame Dimensions

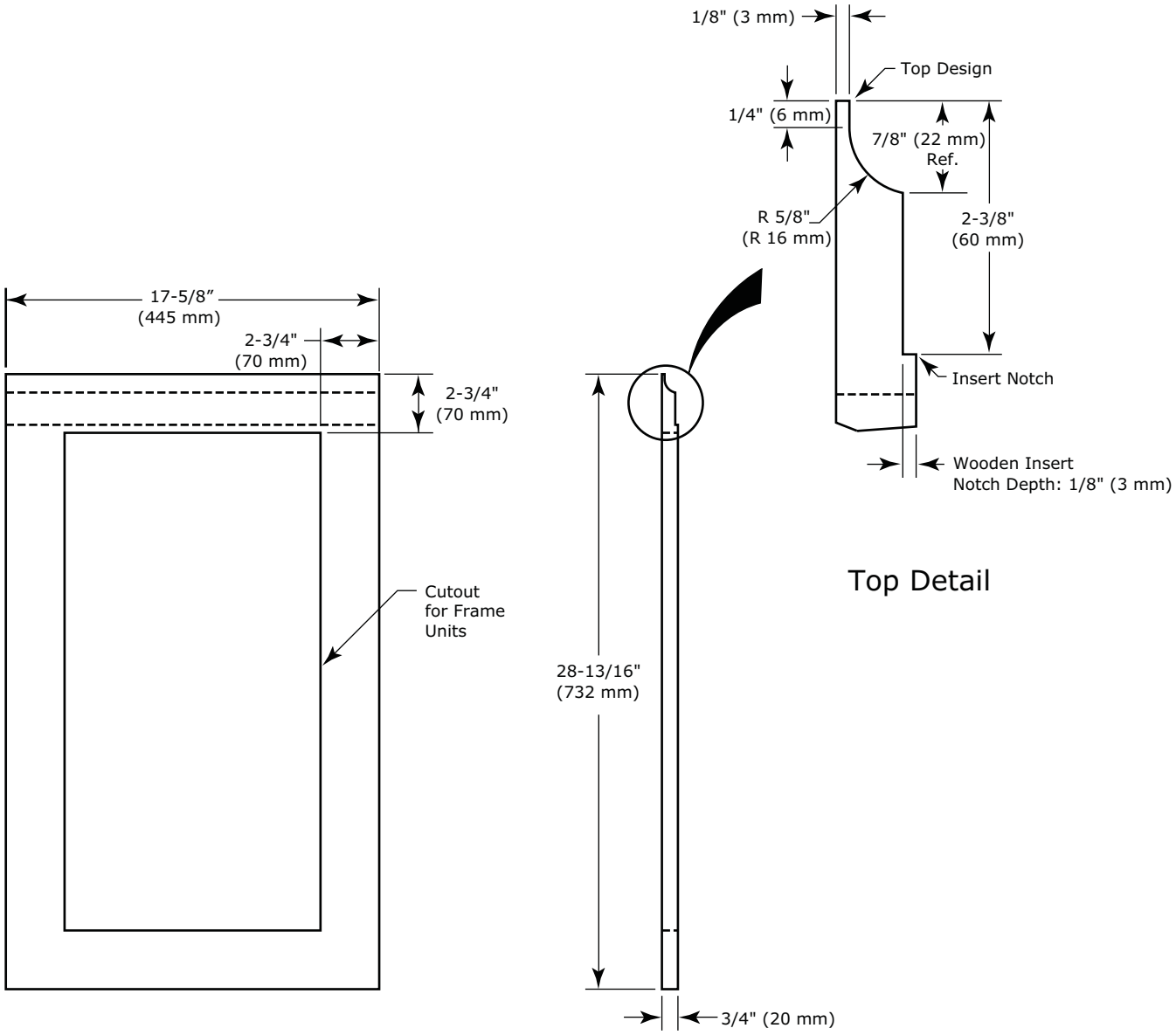

Wooden Insert Dimensions

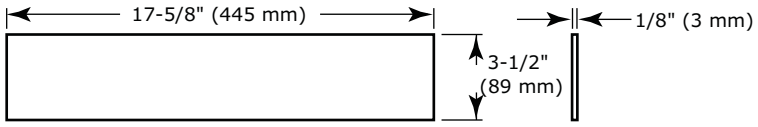

EXTENDED INTEGRATED FRAME

NOTICE

Due to differences in surrounding cabinetry the panel may not perfectly align with door. The procedure below is designed to provide a finished panel that seamlessly integrates with surrounding cabinetry.

Panel Preparation

An extended integrated panel can be used to maintain alignment with an adjacent extended cabinet height or a reduced toe-kick/grille application.

1. Cut the panels to the dimensions listed in the appropriate diagram on the next page. Unit requires two complete panels.

2. Optional: Stain or Finish panel to desired stain or color. Be sure to closely follow the instructions provided by the manufacturer.

3. Optional: Install handles and hardware.

NOTICE

The door panel must not weigh more than 20 lbs (10 kg).

It is important to ensure that all drilled holes are drilled to the correct depth in order to avoid splits in the wood when hardware is installed.

Appliance will need up to 34-1/2" (876 mm) to the underside of the counter to leave room for leveling adjustments.

When applying an integrated frame to a unit, ensure that both sides are finished in order to prevent warping. In some installations, the panel may be visible through the glass while the door is open.

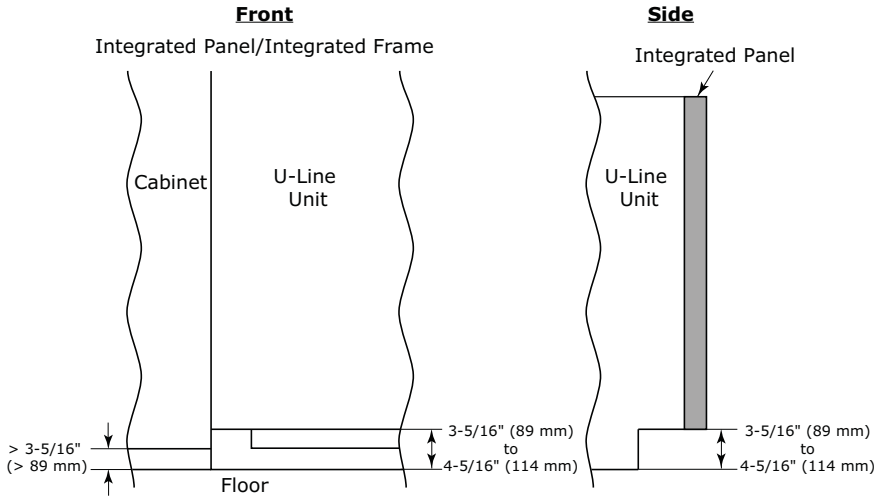

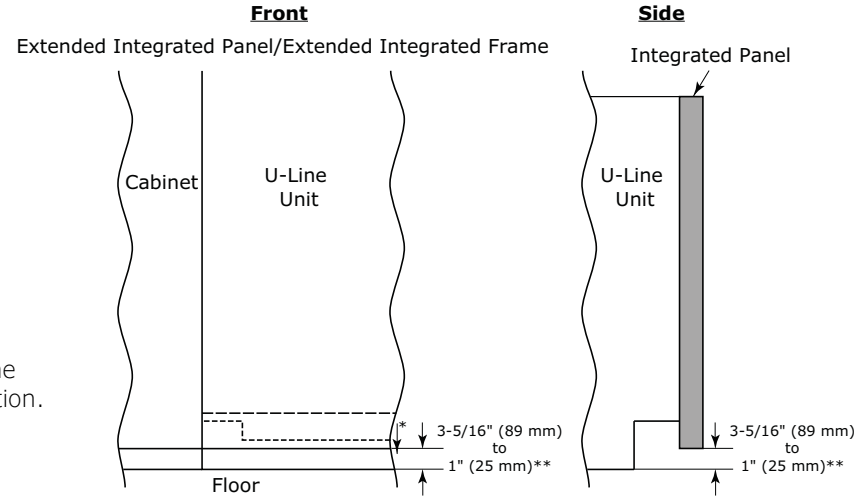

* Panel can extend beyond the door frame.

** A minimum of 1" (25 mm) from the floor is required for proper ventilation.

Extended Integrated Frame Dimensions

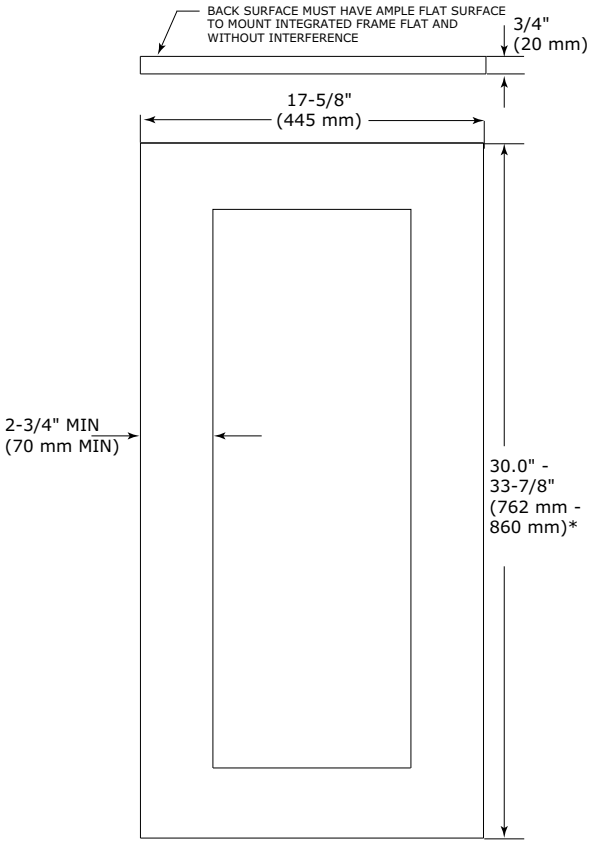

Integrated Frame

* A minimum of 1" (25 mm) is required from the floor to the bottom of the extended integrated panel/frame for proper ventilation.

NOTICE

The minimum border thickness for a 30" (762 mm) tall integrated frame is 2-3/4" (70 mm). The top/bottom border of the frame must account for any additional length.

Integrated Grille - Plinth Dimensions

The 3000 series grille (plinth strip/base fascia) is fully adjustable and can be set to match your surrounding furniture dimensions. In addition to it's adjustability, an integrated grille may also be installed to truly provide a seamless appearance.

PREPARE AND INSTALL INTEGRATED GRILLE (PLINTH STRIP/BASE FASCIA)

1. Use the dimensions provided in the diagram to cut and shape your integrated grille (plinth strip/base fascia) panel. Recommended panel thickness is between 1/4" (6 mm) and 3/8" (9 mm). Height will vary from 3-5/16" (84 mm) to 4-5/16" (110 mm) based on your grille (plinth strip/base fascia) height.

2. Finish or stain your grille (plinth strip/base fascia) panel to match your surrounding furniture. Finish front, back and edges to prevent warping. Carefully follow the manufacturer's recommendations for finish application and cure times.

3. Apply double sided tape to the backside of the integrated grill (plinth strip/base fascia). Use the diagram below for reference. U-Line recommends 3M™ VHB™ tape, a high strength bonding tape.

Apply Tape To Shaded Area

4. Remove backing paper from double sided tape.

5. Carefully align grille (plinth strip/base fascia) over integrated panel and press into position.

INTEGRATED GRILLE (PLINTH STRIP/BASE FASCIA) DIMENSIONS

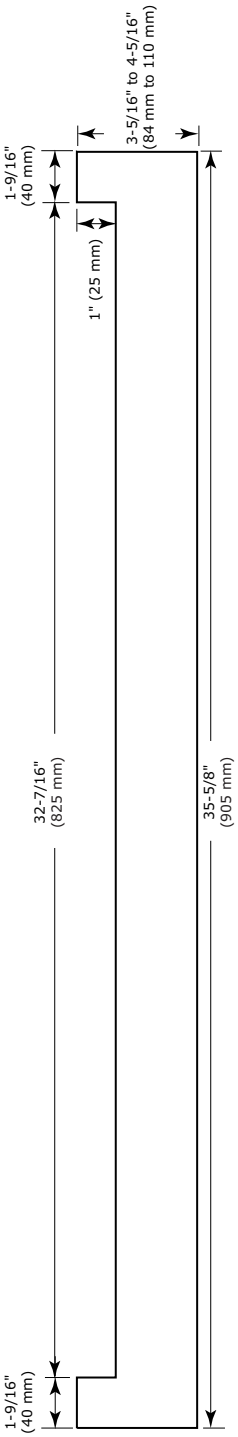

Integrated Panel Installation

1. Fully open door.

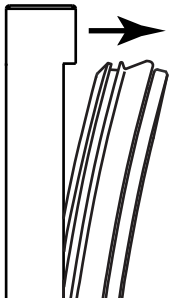

2. Starting at corner, pull gasket away from door.

3. Continue to pull gasket free from gasket channel.

4. Upon removal, lay gasket down on a flat surface.

5. Align top of panel with top edge of door. Center panel on door. (For 3036/3090 models, align panel on the hinge side-edge of door.)

NOTICE

Due to differences in floor construction or surrounding cabinetry, the panel may not sit flush with the top of the door.

6. Secure integrated panel to door using clamps. A robust tape may also be used. U-Line recommends the use of bar clamps to secure the panel to the door. If using tape, be certain the tape will not damage panel finish upon removal.

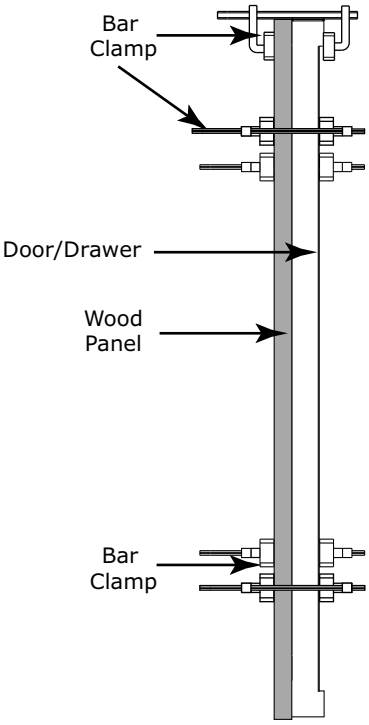

7. Using a 7/64" (3 mm) drill bit, drill 6 pilot holes into the wood panel 1/2" (12 mm) deep using the holes in the door frame as a guide.

NOTICE

It is important to ensure that all drilled holes are drilled to the correct depth in order to avoid splits in the wood when hardwood is installed.

8. Locate 6 of the #6x 1-1/2" (38 mm) screws provided with your unit.

9. Using a Phillips screwdriver, place one screw into each of the 6 pilot holes and screw down. Do not overtighten screws.

10. Ensure the screws sit flush against the bottom of the channel.

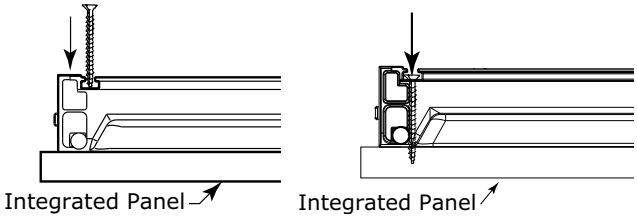

11. Remove clamps from door.

NOTICE

If panel requires additional adjustment after removing clamps, slightly loosen each screw and adjust panel as necessary. Tighten screws upon completion.

12. Starting at the corners, re-install the gasket into the gasket channel in the frame. Make sure the gasket is fully seated.

Grille - Plinth Installation

REMOVING AND INSTALLING GRILLE (PLINTH STRIP/BASE FASCIA)

⚠ WARNING

Disconnect electrical current to the unit before removing the grille (plinth strip/base fascia).

When using the unit, the grille (plinth strip/base fascia) must be installed.

Edges of sheet metal may be sharp.

Removing the grille (plinth strip/base fascia)

1. Disconnect electrical current to unit.

2. Using the included 7/64" Allen wrench, loosen (but do not remove) both grille (plinth strip/base fascia) lock screws. See below.

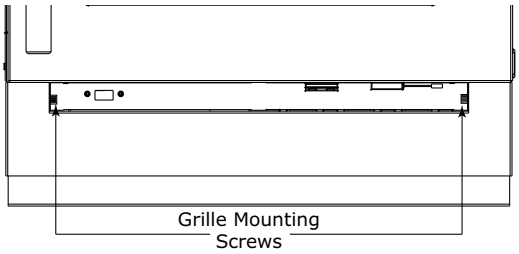

3. Gently pull grille (plinth strip/base fascia) away from unit until it stops.

4. Push grille (plinth strip/base fascia) rails towards the center of the unit to lift rails off lock screws.

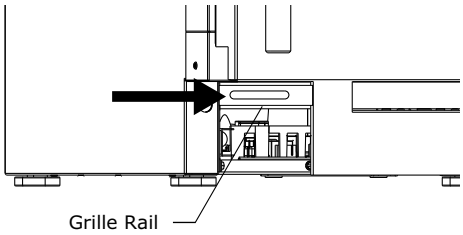

5. Pull grille (plinth strip/base fascia) free from unit.

Installing the grille (plinth strip/base fascia)

1. Align slots in grille (plinth strip/base fascia) rail with screw heads in base of unit

2. Push grille (plinth strip/base fascia) rails towards the center of the unit and set rails over screw head.

3. Slide grille (plinth strip/base fascia) into position. Using included 7/64" Allen wrench tighten grille (plinth strip/base fascia) lock screws.

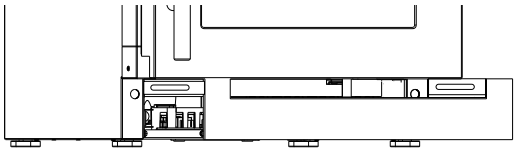

ADJUSTING GRILLE (PLINTH STRIP/BASE FASCIA)

The grille (plinth strip/base fascia) has an automatic vertical plane adjustment and can also be adjusted on its horizontal plane as well. To adjust your grille (plinth strip/base fascia) to match your surrounding furniture, follow the instructions below.

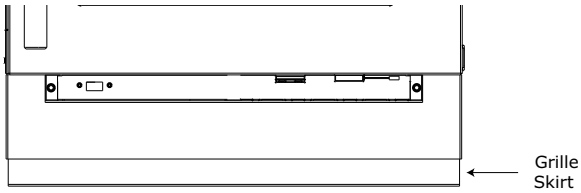

1. Loosen, but do not remove, the lock screws on the inside of the grille (plinth strip/base fascia) rails. Lock screws are located on the inside of each grille (plinth strip/base fascia) rail.

2. The grille (plinth strip/base fascia) can be extended horizontally by pulling out a maximum of 1-1/2" (38 mm). Do not exceed 1-1/2" (38 mm). Secure the lock screws after adjusting.

3. The grille (plinth strip/base fascia) skirt may be manually adjusted to the height of your floor. Simply raise or lower the skirt as needed.

Door Swing

For models that are installed adjacent to a wall, 1/2" (13 mm) clearance is recommended from wall on hinge side to allow the door to open 90°. Allow for additional space for any knobs or pulls installed on the integrated panel/frame.

Units have a zero clearance when installed adjacent to cabinets.

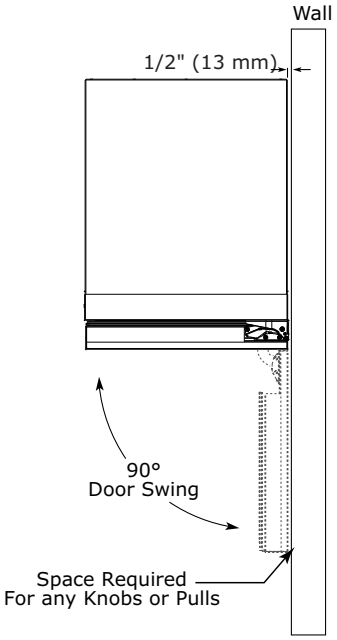

Door Stop

Your U-Line unit was shipped to you with the optional 90° pin.

Your unit's door(s) will open 115° straight from the factory. If you would like the door stop at 90° follow these instructions.

NOTICE

If your unit is already undercounter, it will need to be moved out to access the hinge. With the 90° stop pin in place, you will not be able to replace the hinge cover.

1. Open door approximately 90°.

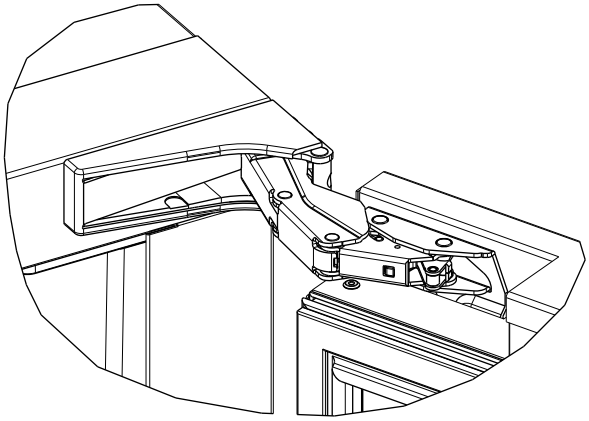

2. Remove hinge cover by lifting top and bottom of hinge cover and sliding the cover inwards to remove from hinge.

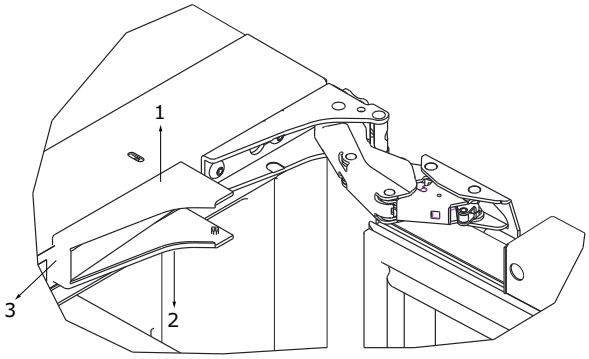

3. Once cover is removed, slide hinge pin into hole as shown. Pin should slide into place, stopping the door at 90°; if the pin does not go into the hole shown, hold the door less than 90° open and try again.

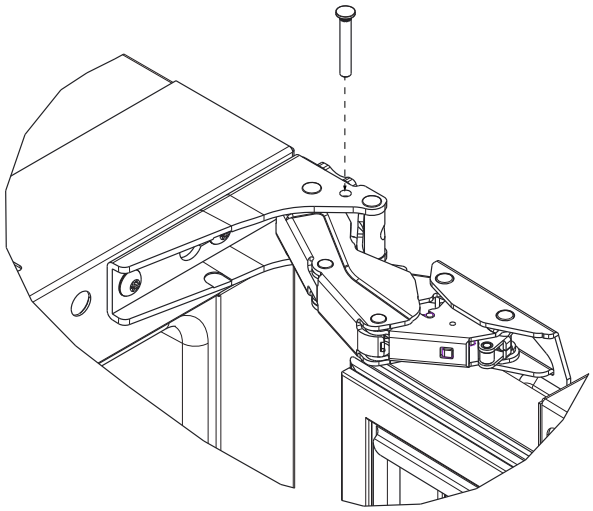

4. To fully seat the pin, tap it lightly with a hammer.

5. Carefully slide your unit back in place.

NOTICE

The pin can be removed to return the door swing back to its original 115° swing by tapping the pin out from the bottom of the hinge.

CLOSER

The door hinge has a self-closing feature that engages when the door is open approximately 6" (150 mm) (about 25°).

Door Adjustments

DOOR ALIGNMENT AND ADJUSTMENT

Align and adjust the door if it is not level or is not sealing properly. If the door is not sealed, the unit may not cool properly, or excessive frost or condensation may form in the interior.

NOTICE

Properly aligned, the door's gasket should be firmly in contact with the cabinet all the way around the door (no gaps). Carefully examine the door's gasket to ensure that it is firmly in contact with the cabinet. Also make sure the door gasket is not pinched on the hinge side of the door.

⚠ CAUTION

Do not attempt to use the door to raise or pivot your unit. This would put excessive stress on the hinge system.

Alignment and Adjustment Procedure

1. Open door and remove gasket near the hinges.
2. Using a T-25 Torx Bit, loosen each pair of Torx head screws on both the upper and lower hinge plates.
3. Square and align door as necessary.
4. Tighten Torx head screws on hinge.
5. Reinstall gasket into the channel starting at the corner.

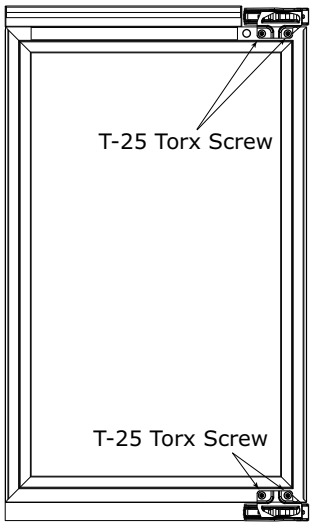

REVERSING THE DOOR

1. Open door.
2. Remove top hinge cover by lifting top and bottom flaps and slide inwards. Repeat on bottom hinge.

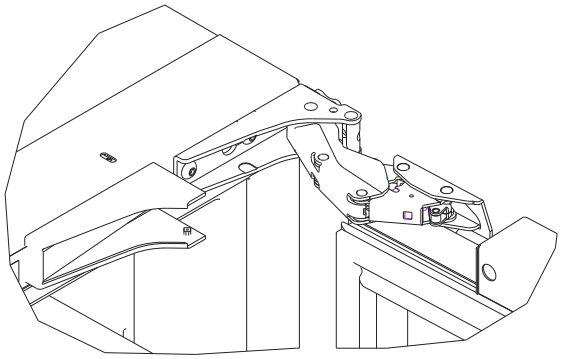

3. Using T-25 Torx bit loosen screw #1 and remove screw #2 on top and bottom hinge. Slide and remove the door from unit. Completely remove screw #1 on top and bottom.

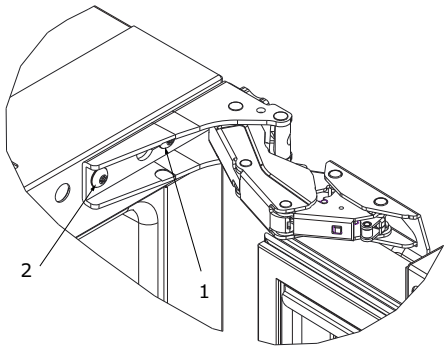

4. Remove caps from screw heads on opposite side (2 on top and 2 on bottom). Using #2 Phillips bit remove the 4 underlying screws. Reinstall the screws and caps on the opposite side.

5. Partially install screw #1 in the outer most holes on top and bottom. Rotate door 180°, align hinge over screw #1 and slide/seat into position. Reinstall screw #2 on top and bottom. Tighten both screws and install hinge cover.

Align and adjust the door:

Align and adjust the door (see DOOR ALIGNMENT AND ADJUSTMENT).

First Use

All U-Line controls are preset at the factory. Initial startup requires no adjustments.

NOTICE

U-Line recommends allowing the unit to run overnight before loading with product.

When plugged in, the unit will begin operating under the factory default setting. Follow the on screen prompt for language selection and temperature units.

To turn the unit off, press ⏻ and hold for 5 seconds and release. The display will show a countdown to switching the unit off.

To power your unit on, simply press ⏻ and the unit will immediately switch on.

Control Operation

Your unit is equipped with two zones. Each zone can be set to a different mode.

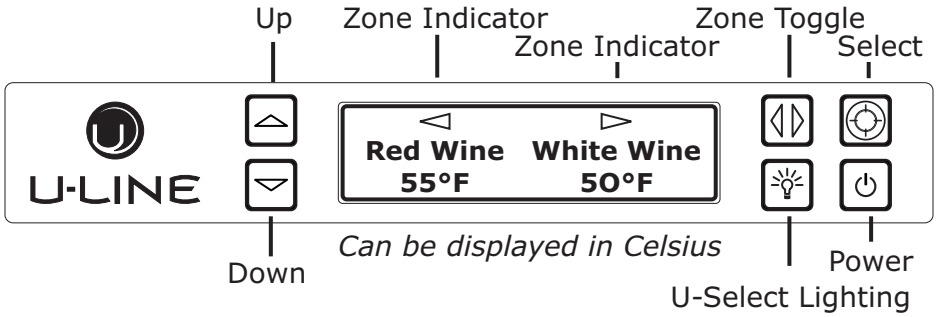

CONTROL FUNCTION GUIDE

FUNCTION	COMMAND	DISPLAY/OPTIONS
OFF	Press ⏻ and hold	Display will count down from 5 to off.
ON	Press ⏻ and release	Unit will come on immediately.
Adjust mode	Press ◁▷ to select zone. Press ⊕ and release to scroll through the modes.	Modes available in table below. Press △ or ▽ to confirm mode or wait 5 seconds.
Adjust temperature	Press ◁▷ to select zone. Press ⊕ to select mode. Press △ or ▽ to set temperature.	Press ⊕ to confirm temperature or wait 5 seconds.
Adjust lighting	Press 💡 to adjust lighting	Press ◁▷ to select zone. Press △ or ▽ to set low, medium or high.
Light ON/OFF with door	Press 💡 to have light ON/OFF with door	Press 💡 and release to scroll through timer settings. Both zones will default to the same timer setting.
Customer menu	Press ⊕ and hold for 5 seconds	Press △ or ▽ to scroll through menu.

Mode	Set Point °F (°C)	Temperature Range °F (°C)
Red Wine	55 (12)	55 - 65 (12 - 18)
White Wine	50 (10)	45 - 55 (7 - 12)
Sparkling Wine	45 (7)	38 - 50 (3 - 10)
Beverage/Drinks	38 (3)	34 - 65 (1 - 18)
Market/Fresh	38 (3)	34 - 40 (1 - 4)
Root	50 (10)	45 - 55 (7 - 12)
Pantry	42 (5)	34 - 70 (1 - 21)
Deli	36 (2)	34 - 40 (1 - 4)

U-SELECT® CONTROL

Digital Display

The 3000 Series units are controlled by a feature rich, advanced OLED display control unit. The control panel allows adjustment to temperature set point, access to Energy Saver Mode, internal temperature readings, and many other features.

Zone Control

Your model has a single control module for both zones. Each side of the control refers to a specific zone.

Adjusting Temperature Settings

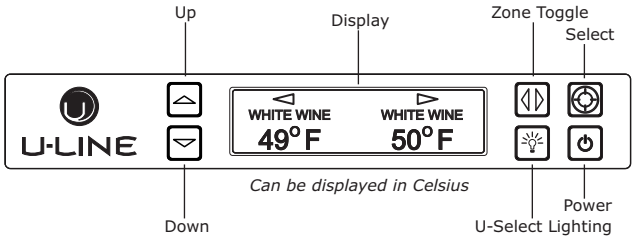

Each zone has a series of Mode Settings with a default value for each setting. Each Mode Setting can be further customized by fine tuning the temperature set point. See the chart below for a description of each mode and mode temperature ranges. Mode selection will vary by model.

Mode Settings Chart

Setting	Default °F (°C)	Range °F (°C)
Red Wine	55 (12)	55 - 65 (12 - 18)
White Wine	50 (10)	45 - 55 (7 - 12)
Sparkling Wine	45 (7)	38 - 50 (3 - 10)
Beverage/Drinks	38 (3)	34 - 65 (1 - 18)
Market/Fresh	38 (3)	34 - 40 (1 - 4)
Root	50 (10)	45 - 55 (7 - 12)
Pantry	42 (5)	34 - 70 (1 - 21)
Deli	36 (2)	34 - 40 (1 - 4)

Many food types have an optimum storage temperature. Storing your food properly will help maintain its freshness and flavor. The Food Storage Chart contains food types and their respective optimum storage temperatures.

Food Storage Chart

Mode	Food Types
Deli	Meats, Fish, Cheeses, Dairy, Butter, Garlic, Oils, Nuts, Condiments
Market/Fresh	Fruits, Vegetables, Berries, Lettuce
Pantry	Dry Goods, Breads, Baking Items, Spices, Seasonings
Root	Root Vegetables, Potatoes, Onions, Lemon, Lime, Melon, Peppers, Beans, Cucumber, Cut Vegetables

Each zone may have its own mode and set point. Available Mode Settings will vary with model.

1. In order to adjust temperatures, you must first select a zone to adjust. To select a zone, press . The left side Mode Setting will flash. Pressing again will select the right side, and the right side Mode Setting will flash. For 3018 Models simply press to alter Mode Settings.

2. Pressing will cycle through the available modes for your model. Reference the Mode Settings Chart for each setting's default set point and range.

3. Once your have selected your desired mode the default set temperature will display. You may further fine tune the temperature by pressing or .

Quick Chill

⚠ CAUTION

A number of zones include a quick chill feature. Quick chill is designed to quickly pull warm beverages and foods down to optimum storage temperature. It is important to only initiate quick chill modes when the unit has been fully loaded with warm product. Failure to follow this notice could result in food or beverages that are cooled to a point below optimum or frozen.

The following chart lists modes which include the quick chill feature and the time which quick chill will run.

Mode	Run Time
Red Wine	Not Available
White Wine	1 Hour
Sparkling Wine	1 Hour
Beverage/Drinks	4 Hours
Market/Fresh	4 Hours
Root	1 Hour
Pantry	4 Hours
Deli	5 Hours

To initiate quick chill:

1. Press to select the desired zone, left or right.

2. Press to select the desired mode setting.

3. Press until the temperature set point reads “Quick”.

The quick chill feature will then begin for the period of time dictated by the mode type. To cancel quick chill, simply select a set point other then “quick”.

NOTE: There may be a delay before quick chill is activated. If the opposite zone is currently in a cooling cycle while quick chill is selected, the cooling cycle on the opposite zone will first be completed.

NOTE: Please note, that when quick chill is activated in a 3036, the zone opposite the active quick chill zone will not return to a cooling cycle until quick chill is complete. If storing product in the opposite zone it is important to limit the number of times the door is opened in the zone not currently under quick chill.

INTERIOR LIGHTING

Your U-Line 3000 Series unit uses a state of the art LED lighting system. The 3036 model dual zone’s lighting can be independently controlled or set as a group.

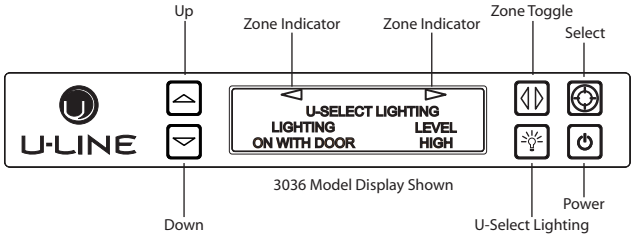

1. To begin, press to enter the lighting menu.

2. The unit initially defaults to control the lighting in both Zones simultaneously. To select a single zone press . Notice the arrows on top of the display changing state. Pressing once will select the left side zone, pressing it again will select the right side zone, and pressing it a third time will select both zones.

3. Press or to cycle through each available brightness setting (Low, Medium or High).

4. Press to cycle through each available timer setting. Selections include “On With Door”, “On 3 Hours”, “On 6 Hours”, or “On 24 Hours”.

5. To exit, press or simply wait for the menu to time out.

ERROR NOTIFICATION

The 3000 model series continuously monitors a series of inputs and parameters to ensure proper and efficient operation of your unit. Should the system detect a fault, an error notification will be displayed on the user interface. See below for a list of errors.

NOTE: Singe zone models will not use (L) left or (R) right zone indicators in error notification.

ID	Description	Solution
No Comm	Unit lost communication to the display.	Disconnect and reconnect power to unit. Contact Customer Care if persistent.
(L) (R) Zone T Open	Left or right zone thermistor circuit open.	Contact Customer Care.
Amb Thrm Open	Ambient thermistor circuit open.	Contact Customer Care.
(L) (R) Zone T Short	Left or right zone thermistor circuit shorted.	Contact Customer Care.
Amb Thrm Short	Ambient thermistor circuit shorted.	Contact Customer Care.
(L) (R) Temp Hi 6H+	Left or right zone temperature +10° over set point for over 6 hours.	Verify door is closed and sealing. Contact Customer Care if persistent.
(L) (R) Temp Hi 12H+	Left or right zone temperature +10° over set point for over 12 hours.	Verify door is closed and sealing. Contact Customer Care if persistent.
(L) (R) Temp Lo 6H+	Left or right zone temperature -10° under set point for over 6 hours.	Verify door is closed and sealing. Contact Customer Care if persistent.
(L) (R) Temp Lo 12H+	Left or right zone temperature -10° under set point for over 12 hours.	Verify door is closed and sealing. Contact Customer Care if persistent.
(L) (R) Door Open 5M	Left or right door switch open for more then 5 minutes.	Verify door is closed and sealing. Contact Customer Care if persistent.

CUSTOMER MENU

The 3000 Series of U-Line undercounter refrigeration appliances contains a feature rich customer menu. The Customer Menu allows access to a series of advanced features including Energy Saver Mode, Sabbath Mode, actual temperature readings as well a method to restore factory defaults.

3000 SERIES - CUSTOMER MENU

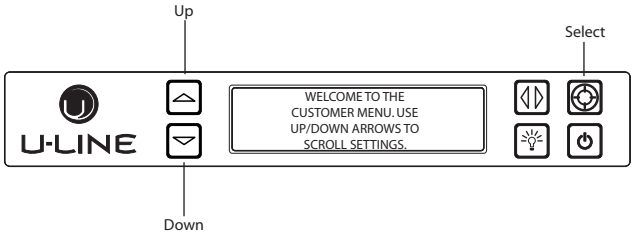

6. To access the Customer Menu hold for 5 seconds.

7. Press or to scroll through available selections.

8. Press to enter selected sub-menu.

9. To exit Customer Menu, press to scroll to the bottom of the display and press to select “Exit”.

Actual Temps

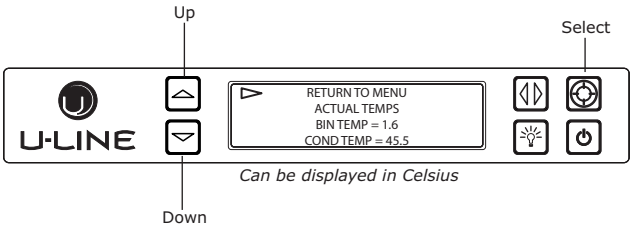

The Actual Temps option displays the actual temperature of each zone and evaporator, as well as ambient temperature.

1. To view actual temperature, press and select "Actual Temps" from the Customer Menu.

2. Press or to scroll through available information.

3. To return to the Customer Menu, press and select "Return to Menu".

Energy Saver Mode

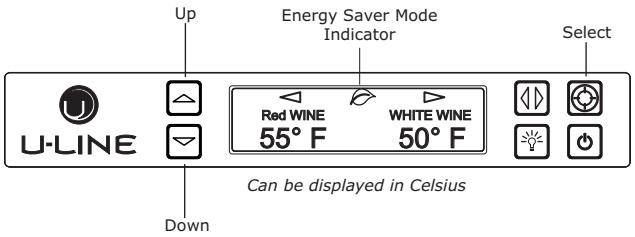

Energy Saver Mode reduces overall energy consumption by altering user set point, differential, lighting and tone settings. When in Energy Saver Mode a small leaf icon will be displayed on the main screen.

1. To enter Energy Saver Mode, first select Energy Saver from the Customer Menu.

2. Press to select "Off" in the menu.

3. Press .

4. Press or to change the selection from Off to On.

5. Press to confirm your selection.

6. To return to the Customer Menu, press and select "Return to Menu".

7. To cancel Energy Saver Mode simply return to the Customer Menu, select Energy Saver and change "On" to "Off".

Languages

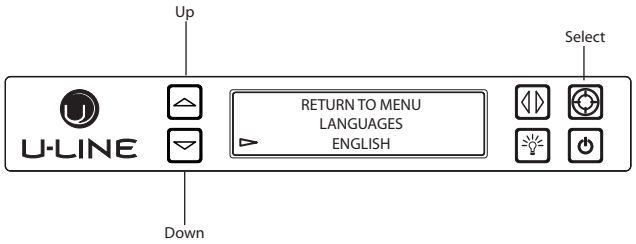

The U-Line 3000 Series of models supports a number of display languages including English, Spanish, French, Dutch and German.

1. To change display language select Languages from the Customer Menu.

2. Press to select "English".

3. Press . "English" will begin to flash.

4. Press or to cycle through the available Languages.

5. Press to confirm your choice.

Sound Level

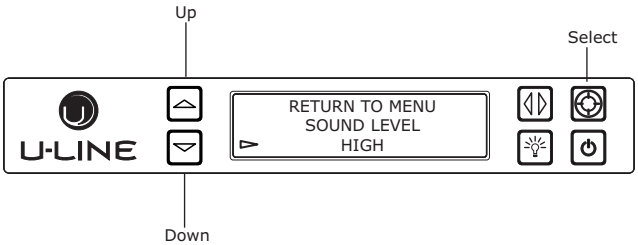

Audible alarms and alert tones support four different Sound Level settings, High, Medium, Low, and Off.

To select a new sound level, enter the Sound Level Menu from the Customer Menu.

1. Press ▽ to select the current sound level.

2. Press ◎. The current setting will begin to flash.

3. Press △ or ▽ to select a different level.

4. Press ◎ to confirm your choice.

Fahrenheit/Celsius

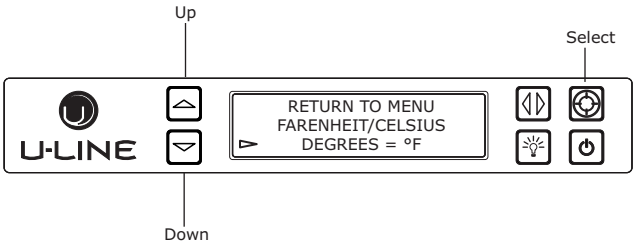

Temperature and set point information can be displayed in either Fahrenheit or Celsius.

To change from Fahrenheit to Celsius, enter the Fahrenheit / Celsius Menu from within the Customer Menu.

1. Press ▽ to select “Degrees”.

2. Press ◎. The selection will begin to flash.

3. Press △ or ▽ to select between °F (Fahrenheit) or °C (Celsius).

4. Press ◎ to confirm your choice.

Factory Default

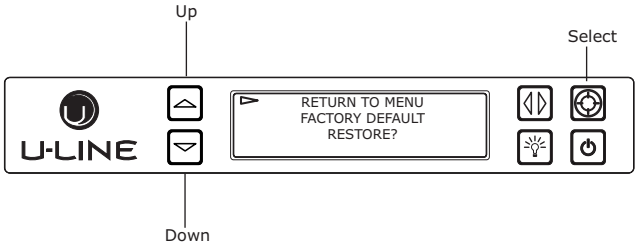

Factory Default will restore all settings to their factory default.

To access Factory Default:

1. Press ▽ to select “Factory Default”.

2. Press ◎.

To restore settings to their factory default:

3. Press ▽ to select “Restore?” and press ◎.

4. “Restore?” will change to “Restoring...” while settings are restored. When restoration is complete, “Restoring...” will return to “Restore?”.

To exit Factory Default, press △ to select “Return to Menu” and press ◎ to confirm.

Help

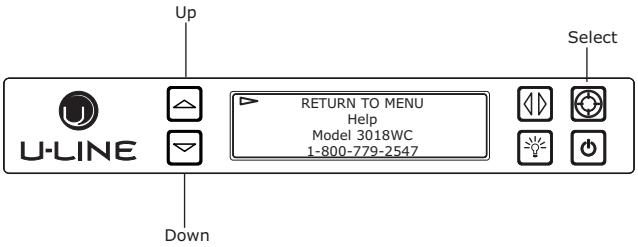

To access the Help Menu, select Help from the Customer Menu. Press ⌃ or ⌄ to scroll through available information. The Help screen displays the following:

- Model.
- U-Line contact information.
- Software version.
- Serial Number.

To exit the Help menu, press ⌃ to select “Return to Menu” and press ◎ to confirm.

Sabbath Mode

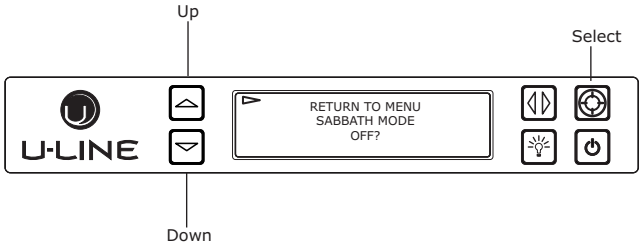

This unit offers a Sabbath mode for users who require this functionality during Sabbaths. Sabbath mode disables system responses to user initiated activities and all external functions, including lighting, display and audible alarms. The unit will still maintain internal temperatures and set points.

To enable Sabbath Mode:

1. Open the unit's door to activate the display.
2. To access the Customer Menu, hold for 5 seconds.
3. Press or to scroll through available selections.
4. Select Sabbath Mode from the Customer Menu by pressing .
5. Press to select "Off".
6. Press . "Off" will begin to flash.
7. Press or to change "Off" to "On".
8. Press to confirm your selection.

The Display will fade out as the unit enters Sabbath Mode. Sabbath

Mode remains active until is quickly pressed and released.

Airflow and Product Loading

NOTICE

The unit requires proper airflow to perform at its highest efficiency. Do not block the front grille, internal fans or vents at any time, or the unit will not perform as expected. When loading your unit, leave space between the internal fans or vents and product loaded. Anything blocking the required airflow/circulation will result in uneven temperature distribution in the cabinet and can also freeze product. Do not install the unit behind a door.

When properly loaded, your U-Line unit will store up to 62 (750 ml) bottles of wine.

Door Removed For Illustration Purposes

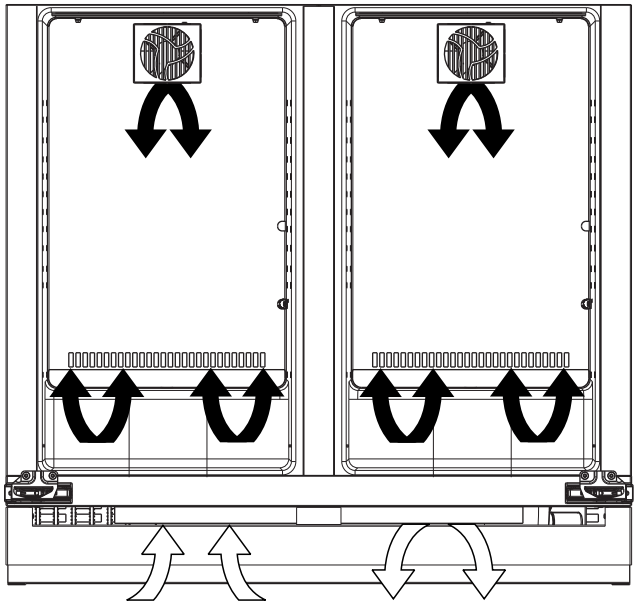

U-Line Wine Guide

LOOKING BEHIND THE LABEL

To most, wine is a delicious mystery. We purchase it, uncork it, and savor its taste and beauty. But there is so much more to true wine appreciation. Many secrets are simply too good to keep bottled up.

WINE SELECTIONS SUGGESTIONS

Selecting the right wine for the right occasion can sometimes be a seemingly awkward or difficult task for the beginning wine enthusiast. We would therefore like to present you with a few suggestions which may provide a little more confidence and enjoyment when choosing and serving your wines.

When selecting wines, keep an open mind and do not be afraid to be adventurous. Do not view the subject of wine so seriously it discourages you from learning and discovering for fear of embarrassment if something is incorrect. Wine is best viewed as a hobby and enjoyed.

When assembling your collection, try not to become obsessed with "Vintages." Although a chart can be a useful tool, generalizations about a specific year have led more than one collector to disappointment. Often an "Off Year" will provide a better value and more drinking enjoyment.

The primary guideline to the subject of wine is your own palate. Do not be afraid to make mistakes. Experiment, discover, but most of all, enjoy yourself and your new U-Line product.

Guide To Common Styles Of Wine

Red Wines		
Full-Bodied Dry	California French Italian	Zinfandel, Cabernet Rhone, Chateauneuf-du-Pape Barbaresco, Barolo
Medium-Bodied Dry	California French	Pinot Noir Bordeaux, Burgundy
Light-Bodied Dry	French Italian	Beaujolais Chianti, Bardolino
White Wines		
Full-Bodied Dry	California French	Chardonnay Montrachet, Meursault Puligny-Montrachet
Medium-Bodied Dry	California French	Sauvignon-Blanc Pouilly-Fuisse, Sancerre, Vouvray, Graves
Light-Bodied Dry	French	Chablis, Muscadet, Pouilly-Fume
Full-Bodied, Very Sweet	Germany French Hungary	Beerenauslese Sauternes Tokay
Medium-Bodied, Semi-Sweet	California Germany	Gewurtztraminer Liebfraumilch
Light-Bodied Off Dry	Germany	Rhine, Mosel, Riesling

Matching Food and Wine

Although there are no hard fast rules for matching wine to food, observe some guidelines. Delicate dishes should be accompanied by lighter more delicate wines. Full-flavored foods should be matched with fuller-bodied wines.

As a general rule, one should aim to ascend in flavor and quality of wines served.

Serve a:	Before a:
DRY wine	SWEET wine
WHITE wine	RED wine
YOUNG wine	OLD wine
LIGHT-BODIED wine	FULL-BODIED wine

Any step back in quality will be noticed. If a fine wine is tasted prior to a lesser wine, many of the fine wine's subtle qualities may be missed.

Common Food and Wine Matches

Foods	Wines
Fish, Shell Fish, Crab, Oysters	Dry White Wines, Light Sparkling or Extra Dry Champagne
Beef, Venison	Full-Bodied Red Wines
Pork, Veal, Lamb and Poultry	Light-Bodied Red Wines
Fruit	Sweet White and Sparkling Wines

A Toast to Wine Truths

Like the grapes themselves, many wine myths have been cultivated over the centuries.

Myth 1: Most wines taste better when aged.

Truth: In fact, less than 5% of wines produced today are meant to be aged. Most wines are crafted to be consumed within the first one to two years.

Myth 2: Wines should be uncorked and decanted allowing them to "breathe."

Truth: To breathe or not breathe? While it is better to allow a young tannic Red to breathe in a glass or decanter to soften the tannins, an old Red reaches a stage in its life where it should be enjoyed soon after opening. Allow an old Red to breathe for a short time to dissipate any off odors. Most white wines can be served, ideally, 10-15 minutes after opening.

Myth 3: When age worthy wines peak, they must be consumed almost immediately.

Truth: Most great wines reach a plateau period rather than a peak. Great Bordeaux's may have as much as a 10-year plateau before fading.

Myth 4: Wine color does not change with aging.

Truth: As red wines age they get lighter in color while whites get darker.

The Cork: A Mystery on Its Own

Cork Presentation. The ritual of the presentation of the cork has a rich and fascinating history dating back to the late 1800's. A phylloxera (root louse) devastation to the vineyards severely limited the supply of great wines. Restaurateurs would remove labels on inferior wines and replace them with labels from superior wines. This made it necessary for patrons to protect themselves by checking the branding on the cork to ensure that what they ordered was, in fact, what they were served.

When presented with a cork today, feel it to check for its integrity, read and match the branding on the cork to the bottle and set it aside. There is little to be learned from the cork. The proof is in the wine.

"Corked" wines. If you've ever had a wine that smelled or tasted of mold, you've experienced a wine that may have been "corked." Today, between five and eight percent of wines are tainted with Trichloroanisole (TCA). This substance, found naturally in plants and trees, is imparted to the wine through the cork. Corked wines are a major concern for winemakers as it destroys millions of cases per year and puts reputations at stake. Amazing as it may seem twist-off caps may offer a better alternative and many great wineries in California, Australia and New Zealand are pioneering the trend.

Common Tasting Terms

Terminology	Description
Acidity	A critical element of wine that is responsible for preserving the wines freshness. Excess acidity results in an overly tart and sour wine.
Balance	A desired trait where tannin, fruit and acidity are in total harmony. Wines with good balance tend to age gracefully.
Body	The weight and presence of wine in the mouth provided by the alcohol and tannin level. Full-bodied wines tend to have this strong concentration.
Bouquet	The blending of a wine's aroma within the bottle over a period of time, caused by volatile acidity.
Complex	A subjective term often used in tasting. A wine is said to be complex if it offers a variety of flavors and scents that continue to evolve as it develops.
Flabby	A wine that lacks structure, or is heavy to the taste, lacks acidity.
Full-Bodied	Wine high in alcohol and extract, generally speaking, fills the mouth, powerful.
Lean	Generally describes wines that are slim, lacking of generosity or thin.
Oaky	A desirable flavor imparted to wine if done in moderation. Most wines are aged in oak barrels one to three years, thereby receiving this toasty oak characteristic. However, if a weak wine is left in contact too long with an oak barrel it will tend to be overpowered with an oaky taste.
Tannin	Tannins are extracted from the grape skins and stems and are necessary for a well-balanced red wine. Tannins are easily identified in wine tasting as the drying sensation over the gums. Tannins generally fade as a wine ages.

IDEAL WINE STORAGE CONSIDERATIONS

Temperature: The most important element about storage temperature is stability. If wine is kept in a stable environment between 40°F (7°C) and 65°F (21°C), it will remain sound. A small 1-2 degree temperature fluctuation within a stable environment is acceptable. Larger temperature fluctuations can affect the corks ability to seal, allowing the wine to "leak" from the bottle.

Humidity: The traditional view on humidity maintains that wines should be stored on their sides in 50% - 80% relative humidity to ensure cork moisture and proper fit in the bottle. Contemporary wisdom suggests that the cork surface is too small to be impacted by humidity. Further the cork is sealed with a metal or wax capsule making humidity penetration impossible. The concept of a humid storage environment was derived from the necessity of wineries to maintain moisture in their cellars to keep wooden barrel staves swollen, preventing wine evaporation and product loss. In fact, vineyards estimate as much as a 10% product loss per year due to evaporation while wine is aging in the wooden barrels. Humidity, however, was not intended for the modern home cellar where wine is stored in glass bottles with sealed corks.

Light: UV rays are not only harmful to people, they are damaging to wines - especially those in clear bottles. Since oxygen molecules in wine absorb UV rays, wine should never be stored in direct light for long periods of time.

Vibration: Provided that sediment is left undistributed and particles are not suspended, vibration in a storage environment is not an issue. Wines can become flat or tired when voids and vacuums are created inside the wine bottle. In order to create voids and vacuums within a liquid, aggressive motion or shaking of the wine bottle would have to occur.

The Right Temperature for Wine

Temperature	Wines
Approximately 60°F (15°C)	Red
50°F - 55°F (10°C -12°C)	White
Approximately 45°F (7°C)	Sparkling

Wine Captain® Models - A Touch of Elegance

In 1985 U-Line was the first North American appliance manufacturer to develop a residential wine storage unit, the Wine Captain®. Each U-Line Wine Captain® model is designed to impress and inspire anyone with an interest in wine by providing cellar conditions in stylish, undercounter units. U-Line Wine Captain® models offer stable storage temperatures, a 50% internal relative humidity and protection from UV light rays. U-Line has the largest product offering available, making storing, presenting, and sharing your wine effortless and elegant.

Recommended Wine Storage

Specially designed horizontal wine racks properly position the bottles so the wine remains in contact with the cork, which ensures the cork does not become dry.

U-Line recommends arranging wine bottles as shown in the illustrations below.

Racks 1 through 5:

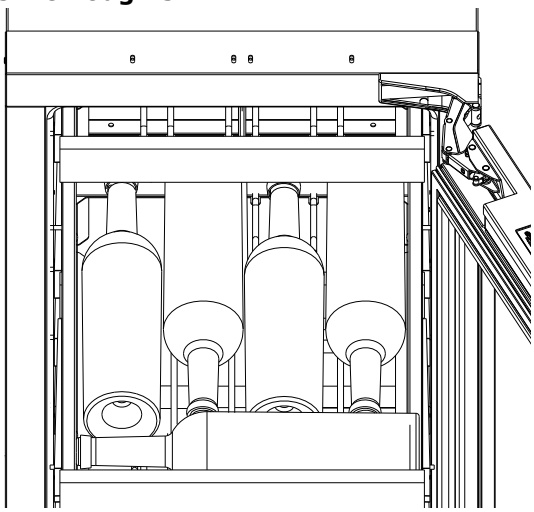

Rack 6:

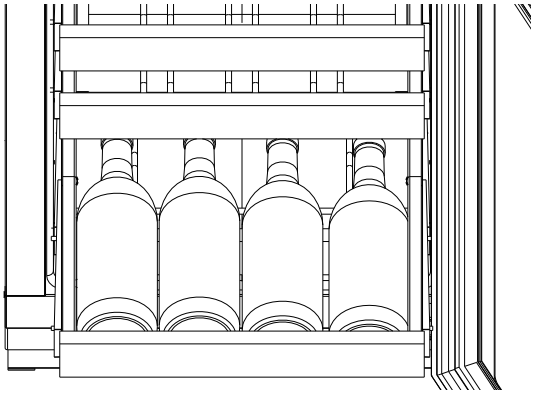

Rack 7:

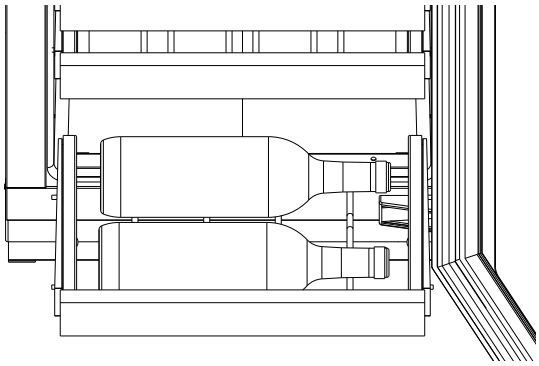

Larger diameter bottles may be stored on the shaded racks, illustrated below.

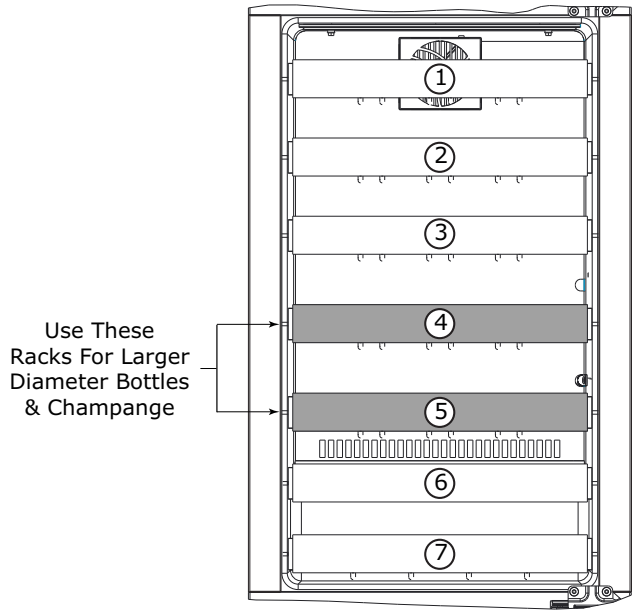

NOTE: After stocking, allow unit to stabilize product temperatures for 24 hours.

Cleaning

EXTERIOR CLEANING

Stainless Models

Stainless door panels and handles can discolor when exposed to chlorine gas, pool chemicals, saltwater or cleaners with bleach.

Keep your stainless unit looking new by cleaning with a good quality all-in-one stainless steel cleaner and polish monthly. For best results use Claire® Stainless Steel Polish and Cleaner. Comparable products are acceptable. Frequent cleaning will remove surface contamination that could lead to rust. Some installations may require cleaning weekly.

Do not clean with steel wool pads.

Do not use stainless steel cleaners or polishes on any glass surfaces.

Clean any glass surfaces with a non-chlorine glass cleaner.

Do not use cleaners not specifically intended for stainless steel on stainless steel surfaces (this includes glass, tile and counter cleaners).

If any surface discoloring or rusting appears, clean it quickly with Bon-Ami® or Barkeepers Friend Cleanser® and a nonabrasive cloth. Always clean with the grain. Always finish with Claire® Stainless Steel Polish and Cleaner or comparable product to prevent further problems.

Using abrasive pads such as Scotchbrite™ will cause the graining in the stainless steel to become blurred.

Rust not cleaned up promptly can penetrate the surface of the stainless steel and complete removal of the rust may not be possible.

Integrated Models

To clean integrated panels, use household cleaner per the cabinet manufacturer's recommendation.

INTERIOR CLEANING

Disconnect power to the unit.

Clean the interior and all removed components using a mild nonabrasive detergent and warm water solution applied with a soft sponge or non-abrasive cloth.

Rinse the interior using a soft sponge and clean water.

Do not use any solvent-based or abrasive cleaners. These types of cleaners may transfer taste to the interior products and damage or discolor the lining.

DEFROSTING

Under normal conditions this unit does not require manual defrosting. Minor frost on the rear wall or visible through the evaporator plate vents is normal and will melt during each off cycle.

If there is excessive build-up of 1/4" (6 mm) or more, manually defrost the unit.

Ensure the door is closing and sealing properly.

High ambient temperature and excessive humidity can also produce frost.

⚠ CAUTION

DO NOT use an ice pick or other sharp instrument to help speed up defrosting. These instruments can puncture the inner lining or damage the cooling unit. DO NOT use any type of heater to defrost. Using a heater to speed up defrosting can cause personal injury and damage to the inner lining.

NOTICE

The drain pan was not designed to capture the water created when manually defrosting. To prevent water from overflowing the drain pan and possibly damaging water sensitive flooring, the unit must be removed from cabinetry.

To defrost:

1. Disconnect power to the unit.
2. Remove all products from the interior.
3. Prop the door in an open position (2 in. [50 mm] minimum).
4. Allow the frost to melt naturally.
5. After the frost melts completely clean the interior and all removed components. (See INTERIOR CLEANING).
6. When the interior is dry, reconnect power and turn unit on.

Cleaning Condenser

INTERVAL - EVERY SIX MONTHS

To maintain operational efficiency, keep the front grille (plinth strip/base fascia) free of dust and lint, and clean the condenser when necessary. Depending on environmental conditions, more or less frequent cleaning may be necessary.

⚠ WARNING

Disconnect electric current to the unit before cleaning the condenser.

NOTICE

DO NOT use any type of cleaner on the condenser unit. Condenser may be cleaned using a vacuum, soft brush or compressed air.

1. Remove the grille (plinth strip/base fascia). (See GRILLE-PLINTH INSTALLATION).

2. Clean the condenser coil using a soft brush or vacuum cleaner.

3. Install the grille (plinth strip/base fascia).

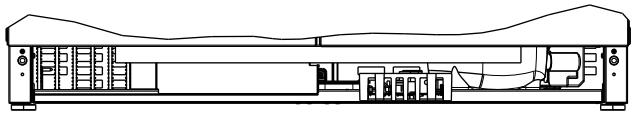

Wine Rack Installation

To remove wine racks for cleaning:

1. Remove any bottles stored on the rack.

2. Grasp the end of the rack and gently slide it out until it stops.

3. The release levers are located on the inside of the rack rails. Press the left rack release lever down. At the same time, lift the matching right rack release lever up. Pull the rack out until it is free of the tracks and the cabinet.

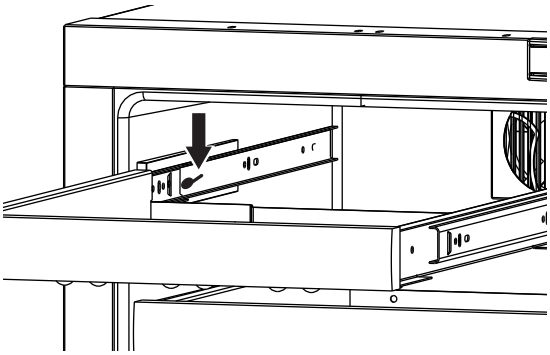

NOTICE

Do not remove the track rails from the cabinet.

To insert wine racks in the cabinet:

1. Align the left and right rack channels with the tracks in the cabinet. Ensure an even track engagement on both sides by gently pushing the rack into the cabinet until it stops.

2. Before reloading the rack, ensure proper movement of the travel stops in the left and right track rails by pulling the rack out gently until it stops.

To clean wine racks:

1. Saturate a soft cloth with a soapy, warm water solution.

2. Wring excess water from cloth and wipe racks down.

NOTICE

The wine racks are greased. This white lithium grease helps provide smooth operation of the slide mechanism. It is important not to remove grease.

Extended Non-Use

VACATION/HOLIDAY, PROLONGED SHUTDOWN

The following steps are recommended for periods of extended non-use:

1. Remove all consumable content from the unit.
2. Disconnect the power cord from its outlet/socket and leave it disconnected until the unit is returned to service.
3. If ice is on the evaporator, allow ice to thaw naturally.
4. Clean and dry the interior of the unit. Ensure all water has been removed from the unit.
5. The door must remain open to prevent formation of mold and mildew. Open door a minimum of 2" (50 mm) to provide the necessary ventilation.

WINTERIZATION

If the unit will be exposed to temperatures of 40°F (5°C) or less, the steps above must be followed.

For questions regarding winterization, please call U-Line at 414.354.0300.

⚠ CAUTION

Damage caused by freezing temperatures is not covered by the warranty.

Troubleshooting

BEFORE CALLING FOR SERVICE

If you think your U-Line product is malfunctioning, read the CONTROL OPERATION section to clearly understand the function of the control.

If the problem persists, read the NORMAL OPERATING SOUNDS and TROUBLESHOOTING GUIDE sections below to help you quickly identify common problems and possible causes and remedies. Most often, this will resolve the problem without the need to call for service.

IF SERVICE IS REQUIRED

If you do not understand a troubleshooting remedy, or your product needs service, contact U-Line Corporation directly at +1.414.354.0300.

When you call, you will need your product Model and Serial Numbers. This information appears on the Model and Serial number plate located on the interior of your product or can be accessed through “Help” in the Customer Menu.

NORMAL OPERATING SOUNDS

All models incorporate rigid foam insulated cabinets to provide high thermal efficiency and maximum sound reduction for its internal working components. Despite this technology, your model may make sounds that are unfamiliar.

Normal operating sounds may be more noticeable because of the unit’s environment. Hard surfaces such as cabinets, wood, vinyl or tiled floors and paneled walls have a tendency to reflect normal appliance operating noises.

Listed below are common refrigeration components with a brief description of the normal operating sounds they make. NOTE: Your product may not contain all the components listed.

- Compressor: The compressor makes a hum or pulsing sound that may be heard when it operates.
- Evaporator: Refrigerant flowing through an evaporator may sound like boiling liquid.
- Condenser Fan: Air moving through a condenser may be heard.
- Automatic Defrost Drain Pan: Water may be heard dripping or running into the drain pan when the unit is in the defrost cycle.
- Solenoid Valves: An occasional clicking sound may be heard as solenoid valves are operated.

TROUBLESHOOTING GUIDE

⚠ DANGER

ELECTROCUTION HAZARD. Never attempt to repair or perform maintenance on the unit before disconnecting the main electrical power.

Troubleshooting - What to check when problems occur:

Problem	Possible Cause and Remedy
Digital Display and Light Do Not Work.	Ensure power is connected to the unit. If the unit is cooling, it may be in Sabbath mode.
Interior Light Does Not Illuminate.	If the unit is cooling, it may be in Sabbath mode or manually set to off.
Light Remains on When Door Is Closed.	Lighting may be set to on; reset to with door.
Unit Develops Frost on Internal Surfaces.	Frost on the rear wall is normal and will melt during each off cycle. If there is excessive build-up of 1/4" or more, manually defrost the unit. Ensure the door is closing and sealing properly. High ambient temperature and excessive humidity can also produce frost.
Unit Develops Condensation on External Surfaces.	The unit is exposed to excessive humidity. Moisture will dissipate as humidity levels decrease.

Problem	Possible Cause and Remedy
Digital Display Functions, But Unit Does Not Cool.	Ensure the unit is not in "Showroom Mode." Momentarily unplug or interrupt power supply to the unit.
Digital Display Shows an Error.	"Door" indicates the door may be opened too long. Ensure the door is closing properly. For other error codes contact U-Line Customer Service.
Product Is Freezing.	Because product in contact with the rear wall may freeze, ensure no product is touching the rear wall. Adjust the temperature to a warmer set point.
Product Is Not Cold Enough.	Air temperature does not indicate product temperature. Adjust the temperature to a cooler set point. Ensure unit is not located in excessive ambient temperatures or in direct sunlight. Ensure the door is closing and sealing properly. Ensure nothing is blocking the front grille, found at the bottom of the unit. Ensure the condenser coil is clean and free of any dirt or lint build-up.

ERROR NOTIFICATION

The 3000 model series continuously monitors a series of inputs and parameters to ensure proper and efficient operation of your unit. Should the system detect a fault, an error notification will be displayed on the user interface. See below for a list of errors.

NOTE: Single zone models will not use (L) left or (R) right zone indicators in error notification.

ID	Description	Solution
No Comm	Unit lost communication to the display.	Disconnect and reconnect power to unit. Contact Customer Care if persistent.
(L) (R) Zone T Open	Left or right zone thermistor circuit open.	Contact Customer Care.
Amb Thrm Open	Ambient thermistor circuit open.	Contact Customer Care.
(L) (R) Zone T Short	Left or right zone thermistor circuit shorted.	Contact Customer Care.
Amb Thrm Short	Ambient thermistor circuit shorted.	Contact Customer Care.
(L) (R) Temp Hi 6H+	Left or right zone temperature +10° over set point for over 6 hours.	Verify door is closed and sealing. Contact Customer Care if persistent.
(L) (R) Temp Hi 12H+	Left or right zone temperature +10° over set point for over 12 hours.	Verify door is closed and sealing. Contact Customer Care if persistent.
(L) (R) Temp Lo 6H+	Left or right zone temperature -10° under set point for over 6 hours.	Verify door is closed and sealing. Contact Customer Care if persistent.
(L) (R) Temp Lo 12H+	Left or right zone temperature -10° under set point for over 12 hours.	Verify door is closed and sealing. Contact Customer Care if persistent.
(L) (R) Door Open 5M	Left or right door switch open for more then 5 minutes.	Verify door is closed and sealing. Contact Customer Care if persistent.

CHECKING PRODUCT TEMPERATURE

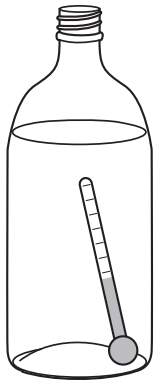

To check the actual product temperature in the unit:

1. Partially fill a plastic (nonbreakable) bottle with water.
2. Insert an accurate thermometer.
3. Tighten the bottle cap securely.
4. Place the bottle in the desired area for 24 hours.
5. Avoid opening the unit during the testing period.

6. After 24 hours, check the temperature of the water. If required, adjust the temperature control in a small increment (see CONTROL OPERATION).

Causes which affect the internal temperatures of the cabinet include:

- Temperature setting.
- Ambient temperature where installed.
- Installation in direct sunlight or near a heat source.
- The number of door openings and the time the door is open.
- The time the internal light is illuminated. (This mainly affects product on the top rack or shelf.)
- Obstruction of front grille or condenser.

Wire Diagram

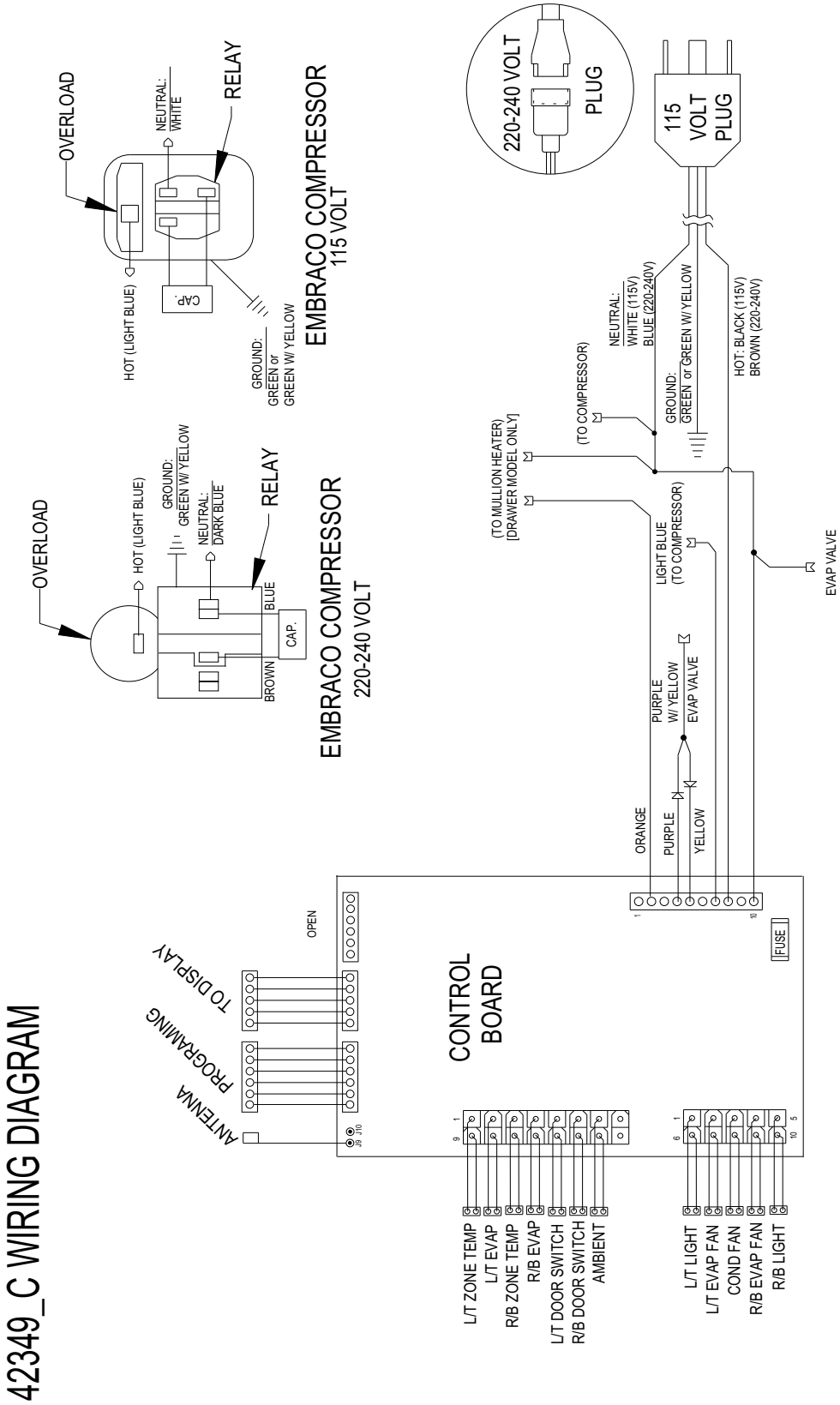

Product Liability

Field service technicians are authorized to make an initial assessment in the event of reported damages. If there are any questions about the process involved, the technician should call U-Line for further explanation.

While inspecting for defects or installation issues, photos should be taken to document any damages or issues found.

During the assessment, if the service technician is able to find the source of the damage and it can be resolved by replacement of a part, the servicer is authorized to replace the part in question. The part that caused the damage must be returned to U-Line in its entirety. The part must be clearly labeled with the serial number of the unit it was removed from, the date, and the servicer who removed the part.

If the service technician determines the damage is the result of installation issues (water connection/drain, etc.), the consumer would be notified and the issues shall be resolved at the direction of the consumer.

If damage is evident and the service technician is unable to find the source, U-Line must be contacted at 1-800-799-2547 for further direction

8900 N. 55th Street • Milwaukee, WI 53223
T: +1.414.354.0300 • F: +1.414.354.354.5696
Website: www.u-line.com

Right product. Right place.
Right temperature Since 1962.

Warranty Claims

The following information defines the parameters for filing a warranty claim:

- Valid serial number needed
- Valid model number needed
- Narda (or equivalent) form or submitted online at www.u-line.com
- 60 day submittal deadline from date of completed service
- Only one repair or unit per warranty claim
- Refrigerant should be labeled and included on the labor submittal
- Door and water level adjustments are covered 30 days from install date.

Serial Number Requirements:

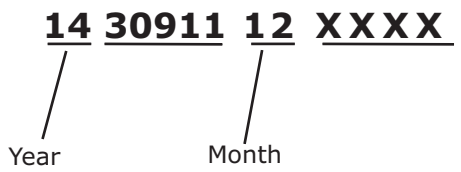

A typical serial number is shown above. The first two digits of the first segment, 14, represents the production year. The number between the dashes, 12, represents the production month. In most cases, warranty status can be verified by the production date information within the serial number.

- Alternatively, a Proof of Purchase (or equivalent) may submitted with the warranty claim to document warranty status. We also accept the following information to verify warranty status:
- New Construction Occupancy Documents
- Closing Paperwork
- Final Billing – Remodel

Noting all of the following on the warranty claim will be considered proof of purchase, hard copy will not be required:

- Name of the selling Dealer
- Date of purchase/installation
- Order or Invoice number (if available)
- Description of document reviewed (i.e. store receipt, closing paperwork, etc)

Parts and labor claims are paid separately. Indicate part numbers and description for parts used in the warranty repair. Include the purchase invoice and name of the parts supplier used to procure the parts.

Parts

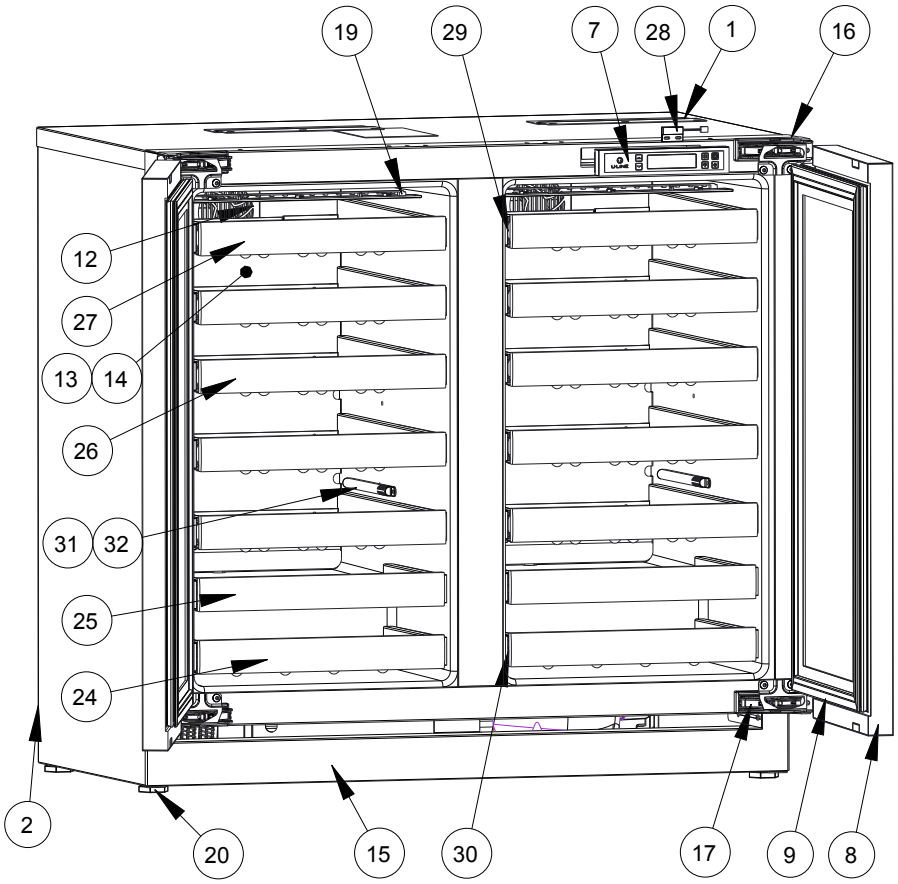

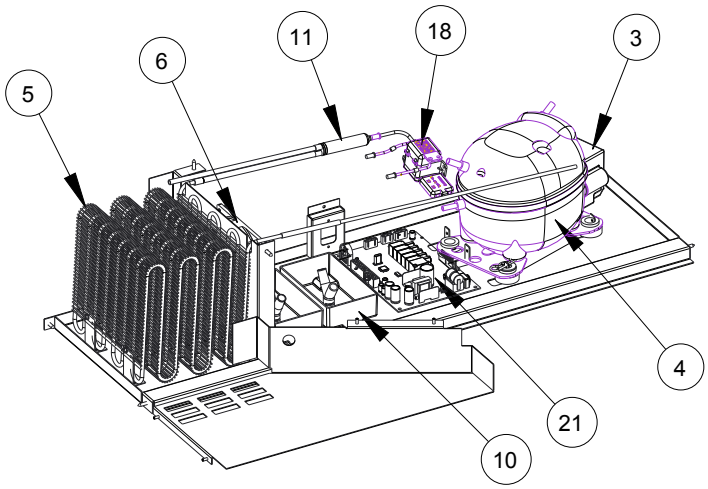

U-3036WCWCINT-00B		
Item	Description	U-Line P/N
1	Anti tip bracket w/screws	80-54012-00
2	Back panel	80-54126-00
3	Compressor electricals only	80-54149-00
4	Compressor w/electricals	80-54150-00
5	Condenser	80-54090-00
6	Condenser fan w/screws	80-54014-00
7	Display module	80-54032-00
8	Door assembly w/o hinges	80-54018-00
9	Door gasket	80-54003-00
10	Drain pan w/double sided tape	80-54002-00
11	Drier	80-54076-00
12	Evap fan w/cover and screws	80-54151-00
13	Evaporator	80-54125-00
14	Evaporator cover	80-54021-00
15	Grille w/screws	80-54123-00
16	Hinge covers(2 pcs)	80-54001-00
17	Hinges(2) w/screws and covers	80-54013-00
18	By-pass valve	80-54180-00
19	LED light strip and cover assy	80-54000-00
20	Leg Levelers (4)	80-54019-00
21	Main board(no wires or case)	80-54008-00
22	Packaging	80-54127-00
23	Power cord	80-54178-00
24	Rack Assembly Bottom	80-54036-00
25	Rack Assembly Lower	80-54035-00
26	Rack Assembly Middle	80-54034-00
27	Rack Assembly Top	80-54033-00
28	Reed switch	80-54134-00
29	Slide Assembly Long	80-54049-00
30	Slide Assembly short	80-54048-00
31	Thermistor (1 piece)	80-54006-00
32	Thermistor cover and pin	80-54023-00
33	Wire Harness, dual	80-54179-00

R-600A Specifications

For R-600a refrigerant service tips and more videos, go to: www.u-line.com/videos.

WARNING

Flammability warnings for a pure-iso-butane refrigerant.

Technician must observe all federal, state and local laws regarding refrigerants.

Gloves and Eye Protection must be used.

R-600a is considered non-toxic, but is flammable when mixed with air.

Keep a dry powder type fire extinguisher in the work area.

R-600a is heavier than air, do not allow any leakage/migration to low areas such as basements and stairs.

Never use a torch on a fully charged refrigeration system.

Never substitute U-Line OEM replacement parts or methods of construction.

R-600a must be stored and transported in approved containers.

⚠ WARNING

Only skilled and well trained service technicians permitted to service R-600a equipped products.

All tools and equipment must be approved for use with R-600a refrigerant.

Local, state and federal laws, standards must be observed along with proper certification and licensing.

Ventilation is required during servicing.

No conversions to R-600a from any other refrigerants. OEM R-600a equipped unit only.

Service area must be free of ignition sources.

No smoking is allowed in the service area.

All replacement electrical components must be OEM and installed properly (sealed and covered).

If the evaporator is cold prior to service, it must be thawed prior to service.

When using a vacuum pump, start pump before opening refrigeration system.

Vacuum pump and recovery equipment should be at least 10 feet from the work area.

It is recommended that a simple LPG gas detector is on site during service.

Ensure that all R-600a is removed from the system prior to brazing any part of the sealed system.

Only a clean, dry leak free system should be charged with R-600a.

R-600A SPECIFICATIONS/LABELING

R-600a equipped products are labeled (both the unit and the compressor).

R-600a is colorless and odorless.

R-600a is considered non-toxic, but is flammable when mixed with air.

Do not remove or alter any R-600a labeling on the product.

Use only a refrigerant grade R-600a from a properly labeled container.

RECOVERING/RECLAIMING R-600A

(R-600a has been exempted from recovery/reclaiming requirements by the US EPA)

Recovery/Reclaiming equipment must be approved for use with R-600a.

Ensure the evaporator is at room temperature prior to recovery/reclaiming R-600a.

Use a common piercing pliers or piercing valve to remove R-600a from the compressor process tube. (Note: Piercing devices must not be left on the system and must be replaced with a Schrader type valve.)

Evacuate/reclaim via the piecing pliers to ensure the system is empty of R-600a before any system work is performed.

The recovery cylinder must be evacuated (no air inside) prior to accepting R-600a.

The recovery cylinder must not be filled more than 45% safe fill level and refrigerants must not be mixed.

The recovery cylinder must be clearly marked with R-600a and Flammable Warning labels.

Ensure proper ventilation during recovery/reclaiming of R-600a.

Start vacuum pump/recovery pump prior to piercing the compressor process tube.

Follow recovery/reclaim OEM instructions for the specific equipment used.

SYSTEM REPAIR

Ensure no residual R-600a refrigerant is left within the system prior to repair (simple venting is not sufficient).

Evacuate and charge with dry nitrogen for leak checks.

Repair leaks or replace system parts as required.

When re-brazing, the system must be purged with dry nitrogen and at least one access point open to the atmosphere.

When re-brazing, proper ventilation is required along with constant monitoring for the presence of R600a refrigerant.

The filter dryer must be replaced any time the sealed system is serviced.

No system should be open to the atmosphere for longer than 15 minutes to avoid moisture migration into the system components.

LEAK DETECTION

After removal of the R-600a, the unit can be charged with dry nitrogen or helium.

Electronic leak detection or soap solution can be used to check for nitrogen/helium leaks.

Never use a halide torch or lighted match to check the system for leaks at any time.

The high side of the refrigeration system (compressor discharge to outlet of drier) must be leak tested with the compressor running.

The low side of the refrigeration system (evaporator, compressor and suction line) must be leak tested with the compressor off (equalized pressure).

RECHARGING

No air is ever to be allowed inside the refrigeration system (R-600a refrigerant or dry nitrogen only).

Never use a torch on a fully charged refrigeration system.

Install a Schrader Type access port on the compressor process stub.

Evacuate the system to 100 microns prior to charging.

Weigh in the R-600a charge using a refrigerant scale. (run compressor an extra two minutes to clear the charging hoses).

Seal the Schrader Type access port, a proper cap and seal must be used to close the system.

SUMMARY

Safely handling R-600a requires proper procedures and training.

R-600a approved service tools must be used.

R-600a labeling must not be removed or altered.

Proper ventilation during service is required.

Never apply a torch to a charged R-600a refrigeration system.

Use OEM replacement service parts and do not alter the construction of the unit.

System Diagnosis Guide

REFRIGERATION SYSTEM DIAGNOSIS GUIDE

System Condition	Suction Pressure	Suction Line	Compressor Discharge	Condenser	Capillary Tube	Evaporator	Wattage
Normal	Normal	Slightly below room temperature	Very hot	Very hot	Warm	Cold	Normal
Overcharge	Higher than normal	Very cold may frost heavily	Slightly warm to hot	Hot to warm	Cool	Cold	Higher than normal
Undercharge	Lower than normal	Warm-near room temperature	Hot	Warm	Warm	Extremely cold near inlet - Outlet below room temperature	Lower than normal
Partial Restriction	Somewhat lower than normal vacuum	Warm - near room temperature	Very hot	Top passes warm - Lower passes cool (near room temperature) due to liquid	Room temperature (cool) or colder	Extremely cold near inlet - Outlet below room temperature backing up	Lower than normal
Complete Restriction	In deep vacuum	Room temperature (cool)	Room temperature (cool)	Room temperature (cool)	Room temperature (cool)	No refrigeration	Lower than normal
No Gas	0 PSIG to 25"	Room temperature (cool)	Cool to hot	Room temperature (cool)	Room temperature (cool)	No refrigeration	Lower than normal

Compressor Specifications

DANGER

Electrocution can cause death or serious injury. Burns from hot or cold surfaces can cause serious injury. Take precautions when servicing this unit.

Disconnect the power source.

Do not stand in standing water when working around electrical appliances.

Make sure the surfaces you touch are not hot or frozen.

Do not touch a bare circuit board unless you are wearing an anti-static wrist strap that is grounded to an electrical ground or grounded water pipe.

Handle circuit boards carefully and avoid touching components.

To measure the start winding resistance, measure across the C and S pins.

To measure the run winding resistance, measure across the C and R pins.

Also check S to R and you should get the sum of the run and start windings.

To ensure the windings are not shorted, check the S and R to ground.

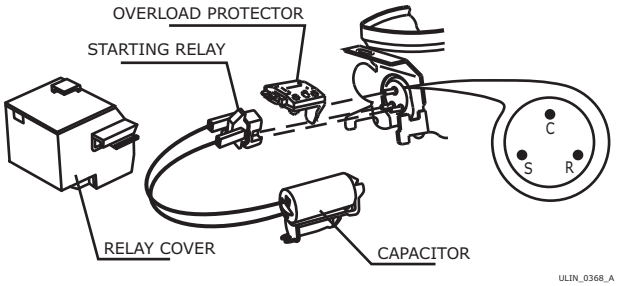

	EMX20CLC
Refrigerant	R600a
Voltage	115 - 127 VAC
Frequency	60 Hz
Run Cap	12μF/165 VAC
Start Winding	6.7 Ohm at 77°F
Run Winding	12.6 Ohm at 77°F
LRA	3.7 A
FLA	0.5 A
Starting Device	8EA14C
Overload	4TM142RFBYY-53

* All resistance readings are ±10%

Troubleshooting - Extended

SPECIFIC ERRORS AND ISSUES

The technically advanced diagnostic capabilities of the electronic controls utilized on the 3000 series units allows for easy and thorough trouble shooting.

Navigation of the control is the key and is explained in the CONTROL OPERATION section of the manual, along with control button layout, control function descriptions, a service mode menu and service menu selection explanations.

Verification of temperature and thermistor performance can be identified by directly viewing actual temperature readings in the service mode.

Component failure issues can be identified through service mode menu selection, “Relay Toggle” Individual components can be switched on and off to check for both proper function of a specific component and also delivery of supply voltage to the components through the relays and DC outputs located on the relay/power board.

Included in this section is some diagnostic tips and as always, if additional help is required please contact the U-Line Corp, “Customer Care Facility” at +1.800.779.2547 for assistance.

⚠ CAUTION

Never attempt to repair or perform maintenance on the unit until the main electrical power has been disconnected from the unit.

TROUBLESHOOTING GUIDE

Concern	Potential Causes	Suggested Remedy
Not Cooling	Compressor overheating	Verify proper air flow through condenser (Refer to Airflow/General Information Section).
		Confirm condenser fan operation (Refer to Airflow/General Information Section).
		Confirm proper compressor operating voltage (Refer to Toggle/ Compressor Information Section).
	Compressor not operating	Confirm proper compressor operating voltage (Refer to Toggle/ Compressor Information Section to initiate power to the compressor).
		Test overload and relay, replace as needed.
	Compressor operating - no cooling	Refer to System Diagnosis Guide.
	Evaporator fan not operating	Refer to Convection Cooling Section.
Frozen Product	Ensure proper use of Quick Chill mode	Refer to Control Operation Section.
	Control set too cold	Refer to Adjusting Temperature Settings Section
	Review logged error codes	Refer to Fault System Diagnosis Guide.
	Thermistor failure	Refer to Thermistor Failure Section
Frost Buildup Inside Unit	Door Ajar or Restricted from Closing	Check door clearance to adjoining cabinetry. Check distribution of product in unit.
	Evaporator fan not operating	Use #19, Component Testing in Service Mode.
	Thermistor failure	Refer to Thermistor Failure Section.
Display Not Working	Unit placed in Sabbath mode?	Refer to Sabbath Mode Section.
	Display unplugged	Verify that both ends of the display wiring are firmly connected.
	Display wiring broken or damaged	Perform continuity test of wiring and replace as needed.
Internal Lights Not Working	Control Setting	Refer to the Interior Lighting Section.
		Unit set to Sabbath Mode. Refer to the Sabbath Mode Section.
	Door switch misaligned or defective	Refer to Reed Switch Section.
Noisy	Refrigeration tubing touching cabinet	Carefully reposition tubing.
	Fan blade obstruction (wiring, foam insulation, packaging material)	Remove obstruction.

MAIN CONTROL

The main control board is very robust and is rarely the cause of system issues. It is important to fully diagnose the board for any suspected failures before attempting to remove the board for replacement or service. Follow the guidelines below to fully test and diagnose the main control.

Power Fault

If the unit does not (or seems to not) power on, follow the flow chart below to help diagnose the issue. Before beginning it is important to first verify the unit is not simply set to sabbath mode.

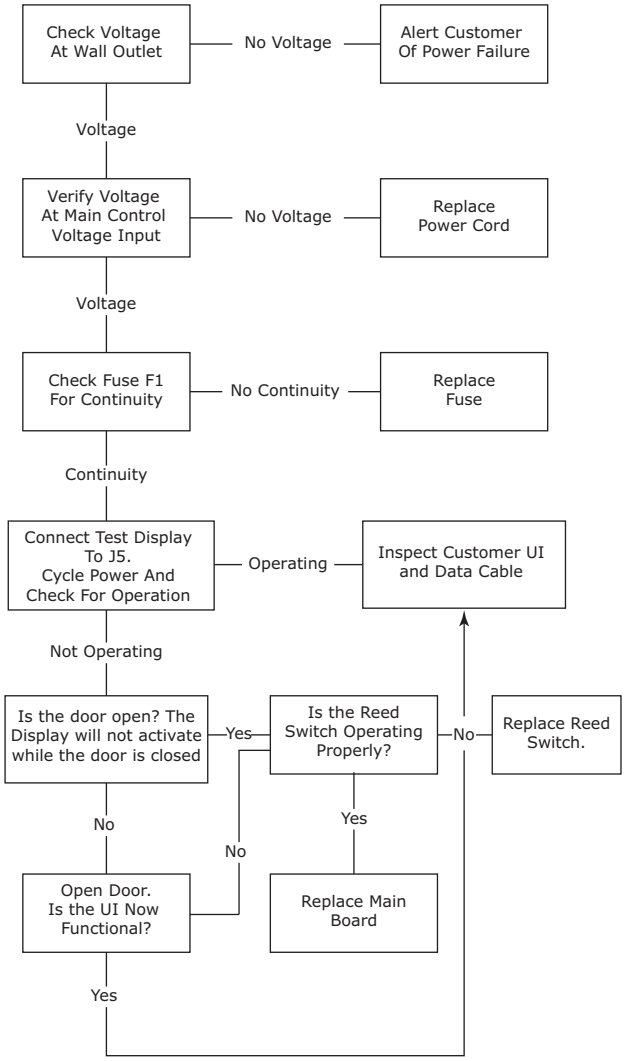

Testing The Main Control

If the main control is suspected of being faulty, the following procedure should be performed to verify main control for functionality.

Relay & DC Outputs

One of the primary functions of the main control is to operate the multiple relay and DC outputs during each cycle. Verify proper operation of these relays using the following procedure.

1. Enter “Relay Toggle” through the service menu.

NOTICE

Frequently toggling the compressor relay could force the compressor into overload. The compressor will automatically deactivate during an overload and will remain deactivated until the overload switch cools. This could take some time. It is important to allow the compressor at least 5 minutes off time between relay cycles.

2. Toggle the relay. Its related component should activate / deactivate with the switching of the relay. If it does not, see “Component Testing.”

Inputs

The main control monitors a number of thermistor inputs and switch states during operation. It would be unlikely that an error in reading an input would be at the board level. Always attempt to replace the faulty switch or thermistor input with a known working sample to verify proper board operation.

Other Suspected Main Control Faults

If other components have been ruled out as being faulty but the unit continues to have operating issues, it is most likely due to a configuration error. Configuration errors can be cleared by restoring the unit to its factory default setting. Factory defaults may be restored through the service menu.

⚠ CAUTION

Precautions must be taken while working with live electrical equipment. Be sure to follow proper safety procedures while performing tests on live systems.

CONVECTION COOLING

All 3000 series units are equipped with an advanced convection cooling system. Convection cooling stabilizes cabinet temperature, cools product faster and increases energy efficiency.

Evaporator Fan

The evaporator fan is responsible for circulating warm air from the refrigeration zone, past the evaporator and back into the refrigerated zone.

The evaporator fan is factory set to have a 1 minute delay at the beginning of a cooling cycle. This delay gives the evaporator time to cool properly before warm air is passed over it. The fan will continue to run for an additional 2 minutes at the end of a cooling cycle. Fan delay times can be modified through the service menu.

Evaporator fan operation is also determined by door switch state. If the door switch circuit opens the fan will stop. When the door switch circuit is closed the fan will either continue running with the cooling cycle, or if not currently cooling, the fan will run for 1 minute to circulate air and clear any condensation that may have appeared on glass doors and shelves.

NOTE: If the unit is set to sabbath mode the evaporator fan will no longer respond to the state of the door switch.

In order to operate efficiently the evaporator fan blade and vents should be unobstructed and free of any dust buildup.

FAULT SYSTEM DIAGNOSIS GUIDE

Error	Solution 1	Solution 2	Solution 3
No Comm	Inspect Customer UI and Data Cable (if defective replace entire door)		
Zone T Open	Inspect zone thermistor connection. Replace if necessary.	Inspect main control wire harness for splits or breaks. Repair split or cut cabling.	
Evap T Open	Inspect evaporator thermistor connection. Replace if necessary.	Inspect main control wire harness for splits or breaks. Repair split or cut cabling.	
Amb Thrm Open	Inspect ambient thermistor connection. Replace if necessary.	Inspect main control wire harness for splits or breaks. Repair split or cut cabling.	
Zone T Short	Inspect thermistor cable for pinch points or damage. Replace if necessary.	Inspect wire harness from main control board for pinch points or damage. Repair split or pinched cabling.	
Evap T Short	Inspect thermistor cable for pinch points or damage. Replace if necessary.	Inspect wire harness from main control board for pinch points or damage. Repair split or pinched cabling.	
Amb Thrm Short	Inspect thermistor cable for pinch points or damage. Replace if necessary.	Inspect wire harness from main control board for pinch points or damage. Repair split or pinched cabling.	
Temp Hi 6H+	If excessive frost is also noted, inspect door and door gasket for proper seal and alignment.	Inspect evaporator fan for proper operation.	Inspect refrigeration system. Reference the System Diagnosis Guide.
Temp Hi 12H+	If excessive frost is also noted, inspect door and door gasket for proper seal and alignment.	Inspect evaporator fan for proper operation.	Inspect refrigeration system. Reference the System Diagnosis Guide.
Temp Lo 6H+	Inspect main control for proper relay operation.	Inspect refrigeration system. Reference the System Diagnosis Guide.	
Temp Lo 12H+	Inspect main control for proper relay operation.	Inspect refrigeration system. Reference the System Diagnosis Guide.	
Door Open 5M	Verify door closes properly.	Inspect cable arm, verify presence of magnet, verify proper operation and movement or arm.	Inspect reed switch wiring.

THERMISTORS

Thermistors are used for various temperature readings. Thermistors provide reliable temperature readings using a resistance which varies based on surrounding temperatures. If a faulty thermistor is suspected it may be tested using an accurate ohmmeter. In an ice water bath (32°F) resistance should measure 16.1 kilohms.

5K OHMS @ 77°
16.1K OHMS - 32°F ambient

THERMISTOR FAILURE

Limp Mode Data Table

Mode	ON	OFF
Beverage/Drinks	10 min.	45 min.
Market/Fresh	10 min.	45 min.
Root	5 min.	90 min.
Pantry	10 min.	45 min.
Deli	10 min.	45 min.

Zone Thermistor

If the zone thermistor fails, the unit will continue to operate in a timed limp mode which varies by model. The unit will otherwise operate normally. The error will be displayed in the error log.

Evaporator Thermistor

If the evaporator thermistor fails, the unit will rely on a preset defrost time during defrost cycles. The unit will otherwise operate normally. Evaporator thermistor errors will be displayed in the error log.

Always assure that all thermistor connections are clean and dry. Whenever opening a thermistor connection be sure to apply a fresh dab of die electric grease.

REED SWITCH

A reed switch is used to monitor door state. When the door is closed magnetic force pulls the reed to its contact and closes the circuit which turns the light and display off. When the door is open the reed pulls away from the contact and opens the circuit. If the door is left open for longer than 5 minutes, the switch will trigger an error code and set an audible warning.

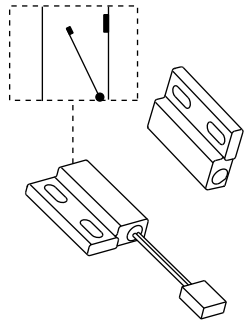

Magnet Away From Switch
(Door Open)
(Switch Open)

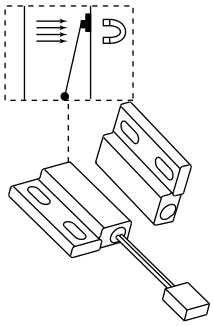

Magnet Close To Switch
(Door Closed)
(Switch Closed)

Control Operation - Service

TO ENTER THE MAIN SERVICE MENU

PRESS AND HOLD FOR 5 SECONDS AND

TO GO TO NEXT SUB-MENU ITEM
YOU MUST ARROW UP TO "RETURN TO MENU"

TOUCH AND RELEASE TO RETURN TO THE MAIN MENU

SCROLL THROUGH MENU

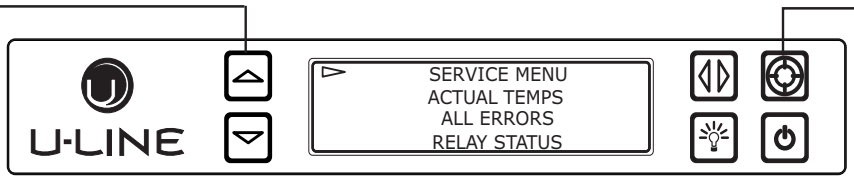

ENTER & EXIT SUB-MENU ITEM

ACTUAL TEMPS	SHOWS TEMPERATURES WITHOUT OFFSETS. EACH ZONE HAS AN EVAP AND AIR THERMISTOR. EACH UNIT HAS AN AMBIENT THERMISTOR	RETURN TO MENU ACTUAL TEMPS LEFT ZONE = 52° LEFT EVAP = 52°
ALL ERRORS	DISPLAYS THE NUMBER OF TIMES AN ERROR HAS OCCURRED SCROLL TO THE END TO ERASE THE ERROR CODES	RETURN TO MENU ALL ERRORS NO COMM 3 L ZONE T OPEN 0
RELAY STATUS	DISPLAYS THE CURRENT STATUS OF THE RELAYS ON THE BOARD (not all relays are used on all models)	RETURN TO MENU RELAY STATUS MULL COND DEF LVLV OFF OFF OFF ON
RELAY TOGGLE	ALLOWS THE RELAYS TO BE TOGGLED ON/OFF TO CHECK RELAY & COMPONENT YOU CAN TURN ON MULTIPLE RELAYS TO CHECK A ZONE, (COMP FAN ETC)	RETURN TO MENU RELAY TOGGLE MULL OFF COND OFF
INPUT STATUS	DISPLAYS DOOR SWITCH STATE, TEST INPUT, AND USB STATE	RETURN TO MENU INPUT STATUS LEFT DOOR CLOSED RIGHT DOOR OPEN
OUTPUTS	MONITORS THE STATE OF DC OUTPUTS (evap & condenser fans 0 - 100% and lighting off - low - med - high)	RETURN TO MENU OUTPUTS L EVAP FAN = 0% R EVAP FAN = 0%
OFFSETS	OFFSETS ARE USED TO ADJUST OR CORRECT THERMISTOR READINGS CORRECTED VALUES MAY BE VIEWED THROUGH THE CUSTOMER MENU	RETURN TO MENU OFFSETS RIGHT ZONE = -18°C RIGHT EVAP = -17°C
SELF TEST	SELF TEST IS USED TO DIAGNOSE THE BOARD IF NO ERRORS ARE PRESENT "NO ERRORS" WILL BE DISPLAYED, THE MAIN BOARD IS FUNCTIONING PROPERLY	RETURN TO MENU SELF TEST NO ERRORS
DIFFERENTIALS	DIFFERENTIALS ARE USED TO DETERMINE AT WHAT TEMPERATURE THE UNIT CYCLES. "O" SETTING IS +/- 2° DIFFERENTIAL	RETURN TO MENU DIFFERENTIALS LEFT = -16°C RIGHT = -16°C
EVAP FAN	THIS MENU IS USED TO SET THE DURATION THE EVAPORATOR FAN WILL RUN AFTER THE COMPRESSOR CYCLES OFF	RETURN TO MENU EVAP FAN EVAP FAN ON = 1 EVAP FAN OFF = 60
MULLION	THIS MENU IS USED TO SET THE DURATION THE MULLION HEATER WILL BE ON AFTER THE COMPRESSOR CYCLES OFF	RETURN TO MENU MULL MULL ON=5 MULL OFF=30
FACTORY DEFAULT	FACTORY DEFAULT IS USED TO RESTORE ALL SETTINGS TO THE FACTORY DEFAULT FOR THE SELECTED MODEL	RETURN TO MENU FACTORY DEFAULT RESTORE?
RE-SELECT MODEL #	RE-SELECT MODEL IS USED TO MODIFY THE MODEL INFORMATION CHANGING THE MODEL COMPLETELY REPROGRAMS AVAILABLE ZONES	RETURN TO MENU RE-SELECT MODEL 3090WCWC
FACTORY Wi Fi	THIS SETTING IS FOR FACTORY USE ONLY AND SHOULD REMAIN OFF	RETURN TO MENU FACTORY WiFi OFF
SET POINTS	THE SET POINTS MENU IS USED TO MODIFY BOTH THE ZONE AND EVAP SET POINTS THE EVAP SET POINT IS USED DURING DEFROST, IT MUST REACH 42°F (6°C)	RETURN TO MENU SET POINTS LEFT ZONE = 12°C LEFT EVAP = 7°C
FAN DELAY	FAN DELAY ALLOWS MODIFICATION OF FAN RUN TIMES BOTH AT THE START OF A COOLING CYCLE AND AT THE END AFTER THE COMPRESSOR STOPS	RETURN TO MENU FAN DELAY FAN 1 DELAY OFF = 1 FAN 2 DELAY ON = 2
SHOWROOM MODE	RANDOMLY SCROLLS THROUGH ZONES, MODES, TEMPERATURES AND OTHER FEATURES. TOUCH AND HOLD TO EXIT SHOWROOM MODE	RETURN TO MENU SHOWROOM MODE OFF
EXIT	SCROLL DOWN TO "EXIT". TOUCH AND RELEASE TO EXIT SERVICE MODE	FAN DELAY USB PORT SHOWROOM MODE EXIT

SERVICE MENU

In addition to a feature rich customer menu, the 3000 series also offers a service menu with the ability to fine tune and monitor unit operation.

To initiate the Service menu hold both ⌃ and ◫ for 5 seconds.

Actual Temps

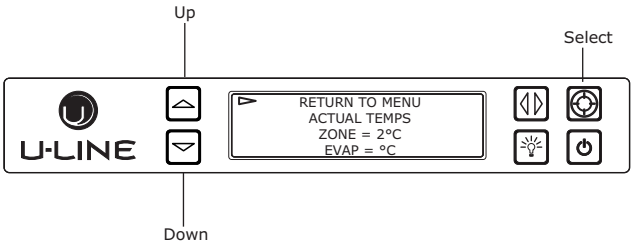

The Actual Temp option in the service menu will display raw thermistor readings without calculating offsets.

1. Press ⌄ to select “Actual Temps”.

2. Press ◎.

3. Use ⌃ and ⌄ to scroll through available thermistor readings.

To exit the Actual Temps menu press ⌃ to select “Return to Menu” and press ◎ to confirm.

All Errors

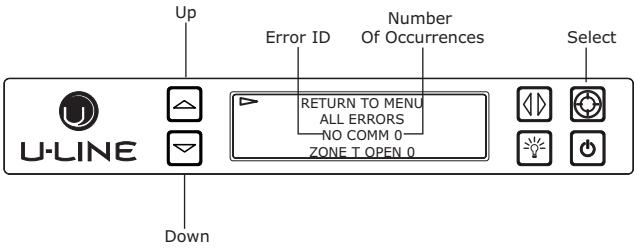

The All Errors option keeps record of any system errors. When an error occurs it is recorded to all errors. The number next to the error indicates the number of recorded instances. Errors in the log may not be currently active. The error log memory is non volatile and is persistent should power be lost and restored to the unit. See below for a list of logged errors and their respective descriptions.

ID	Description	Solution
No Comm	Unit lost communication to the display	Check connection to Display board and Main board. Check integrity of wires. If unit not operational, replace wire, if functioning properly, then software re-set and no adjustments are needed.
L Zone T Open	Left Zone thermistor circuit open	Check thermistor connection to harness for moisture or corrosion. Also check connection where thermistor harness attaches to main board. If connections are valid replace the thermistor. NOTE: DWR/ZWC models, L indicates TOP zone, R indicates BOTTOM zone.
R Zone T Open	Right Zone thermistor circuit open	
L Evap T Open	Left Evaporator thermistor circuit open	
R Evap T Open	Right Evaporator thermistor circuit open	
Amb Thrm Open	Ambient thermistor circuit open	
L Zone T Short	Left Zone thermistor circuit short	
R Zone T Short	Right Zone thermistor circuit short	
L Evap T Short	Left Evaporator thermistor circuit short	
R Evap T Short	Right Evaporator thermistor circuit short	
Amb Thrm Short	Ambient thermistor circuit short	
L Temp Hi 6H+	Left Zone temperature +10°F (+5°C) over set point for over 6 hours	Is condenser coil clean? Is condenser fan operating? Check zone thermistor for correct resistance. Verify thermistor connections are clean and intact. Check zone valve operation. Sealed system issue? NOTE: DWR/ZWC models, L indicates TOP zone, R indicates BOTTOM zone.
R Temp Hi 6H+	R Zone temperature +10°F (+5°C) over set point for over 6 hours	
L Temp Hi 12H+	Left Zone temperature +10°F (+5°C) over set point for over 12 hours	
R Temp Hi 12H+	R Zone temperature +10°F (+5°C) over set point for over 12 hours	
L Temp Lo 6H+	Left Zone temperature -10°F (-5°C) over set point for over 6 hours	Verify thermistor connections are clean and dry. Verify thermistor resistance. Verify correct operation of zone valve. NOTE: DWR/ZWC models, L indicates TOP zone, R indicates BOTTOM zone.
R Temp Lo 6H+	R Zone temperature -10°F (-5°C) over set point for over 6 hours	
L Temp Lo 12H+	Left Zone temperature -10°F (-5°C) over set point for over 12 hours	
R Temp Lo 12H+	R Zone temperature -10°F (-5°C) over set point for over 12 hours	
L Door Open 5M	Left door switch open for more than 5 minutes.	Check door switch magnet reed switch alignment when door is in closed position. Check reed switch connection at the harness and the main board. NOTE: DWR models, L indicates TOP drawer, R indicates BOTTOM drawer. NOTE: ZWC models indicate L Door for the only door present.
R Door Open 5M	Right door switch open for more than 5 minutes.	

To access All Errors follow the steps below.

1. Press to select “All Errors”.
2. Press .
3. Press and to scroll through available information.

To clear the error log press to select “Clear Errors” and press to confirm.

To exit the Actual Temps menu press to select “Return to Menu” and press to confirm.

Relay Status

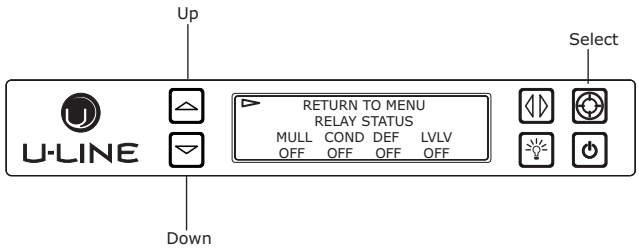

Relay status displays the current state of each relay. While all available relays are displayed, only a portion are used.

ID	Description	Availability
Mull	Mullion Heater	Drawer Models
N/A	N/A	N/A
LVLV	Left (top) valve	All Models
RVLV	Right (bottom) valve	All Models
Cond	Condenser Fan	All Models
Comp	Compressor	All Models

NOTE: The Cond (Condenser Fan) will switch state with the compressor relay, however the condenser fan is actually powered through a DC output. Condenser fan status can be viewed through the “Output” service menu option.

To access Relay Status

1. Use to select “Relay Status”.
2. Press .
3. Press and to scroll through available information.

To exit the Relay Status simply press to exit.

Relay Toggle

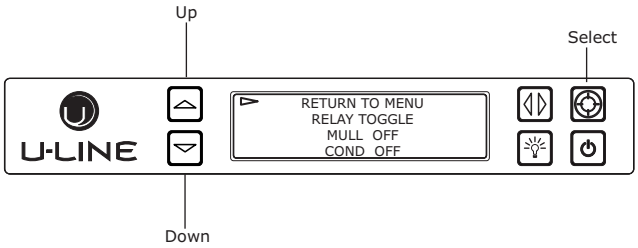

Relay toggle is used to manually switch the state of each relay to test for proper operation. In addition to the AC relays, DC switches may also be toggled. Relay toggle can also be used to force the unit into a particular state.

ID	Description	Voltage
Mull	Mullion Heater (Drawers)	AC
N/A	N/A	N/A
LVLV	Left (top) valve	AC
RVLV	Right (bottom) valve	AC
Cond	Condenser fan (Not Used)	AC
Comp	Compressor	AC
Fan 1	Left/Top Condenser Fan (Excludes ZWC)	DC
Fan 2	Condenser Fan	DC
Fan 3	Right/Bottom Evaporator Fan (Excludes ZWC)	DC
Light 1	Left (top) light	DC
Light 2	Right (bottom) light	DC

To access Relay Toggle

4. Press to select “Relay Toggle”.

5. Press .

6. Press and to scroll through each relay and DC output.

7. Press to toggle.

To exit the Relay Toggle menu press to select “Return to Menu” and press to confirm.

Input Status

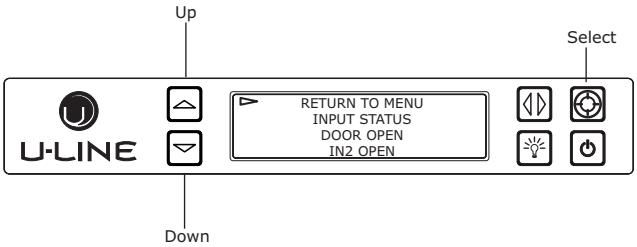

Input status displays the current state of each available input.

ID	Description	State
Left Door	Left (top) Door Switch	Open - Closed
Right Door	Right (bottom) Door Switch (excludes ZWC)	Open - Closed

To access Input Status

1. Press to select “Input Status”.

2. Press .

3. Press and to scroll through available information.

To exit the Input Status menu press to select “Return to Menu” and press to confirm outputs.

Outputs

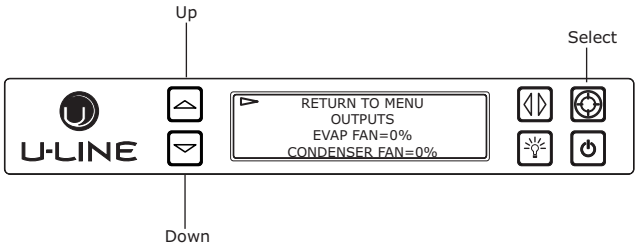

Outputs is used to monitor the state of DC outputs.

ID	Description	Value
L Evap Fan	Left (top) Evaporator Fan (excludes ZWC)	On - Off
R Evap Fan	Right (bottom) Evaporator Fan (excludes ZWC)	On - Off
Condenser Fan	Condenser Fan	On - Off
L Light	Left (top) Light	Off - Low - Med - High
R Light	Right (bottom) Light	Off - Low - Med - High

To access Outputs

1. Press to select “Outputs”.

2. Press .

3. Press and to scroll through available information.

To exit the Input Status menu, press to select “Return to Menu” and press to confirm.

Offsets

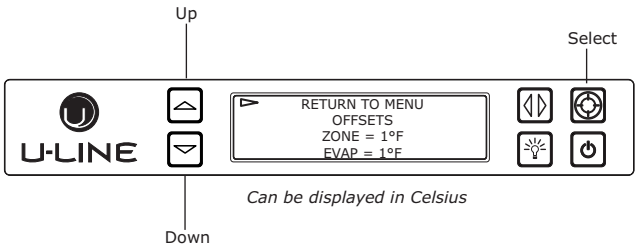

NOTICE

Do not make an adjustment to this without first contacting the tech line: (800) 779-2955.

Offsets are used to adjust or correct thermistor readings. Offset values are added to the current thermistor reading and are then used by the control board to determine cooling and defrost cycle times. Offsets have a range of +/- 10°F. Corrected values may be viewed through the customer "All Temps" menu.

To access Offsets

1. Press to select "Offsets".
2. Press .
3. Press and to scroll through available thermistors.

To change offsets

4. Press , the selected thermistor will begin to flash.
5. Press or to modify offset value.
6. Press to confirm setting.

To exit the Offset menu, press to select "Return to Menu" and press to confirm.

Self Test

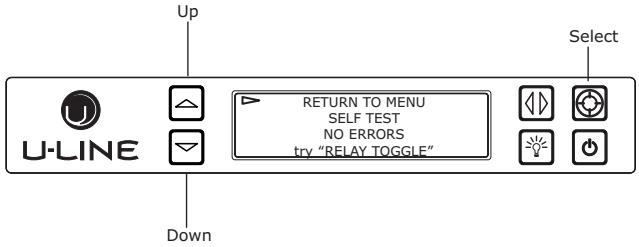

Self test is used to initiate a self diagnostic report. Any system faults will be displayed under Self test. If no errors are present "no errors" will be displayed and the main control board is functioning properly. The main control board is extremely robust and should rarely require service. Most issues are external to the control. Reference troubleshooting for more information.

To access Self Test

1. Press to select "Self Test".
2. Press .
3. Press and to scroll through available information.

To exit the Self Test, Press to select "Return to Menu" and press to confirm.

Differentials

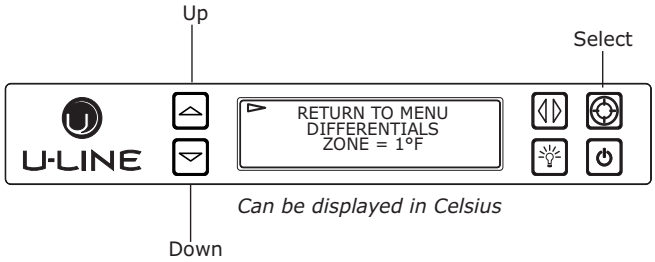

(DO NOT MAKE AN ADJUSTMENT TO THIS WITHOUT CONTACTING TECH LINE: 800-779-2955)

Differentials are used to determine the maximum variation from set point and have a range of 0 through 10. The table below shows the effect of differentials on cooling cycles with a set point of 45°F (7°C).

NOTE: Air temperature does not reflect product temperatures.

Differential	Cycle Start °F (°C)	Cycle End °F (°C)
0	45° (7°)	43° (6°)
1	46° (8°)	43° (6°)
2	47° (8°)	41° (5°)
3	48° (9°)	41° (5°)
4	49° (10°)	39° (4°)
5	50° (10°)	37° (3°)

The graph below shows a unit's cooling cycle over time with various differentials.

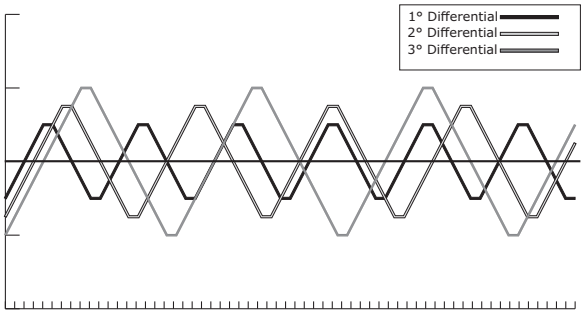

Evap Fan (excludes ZWC)

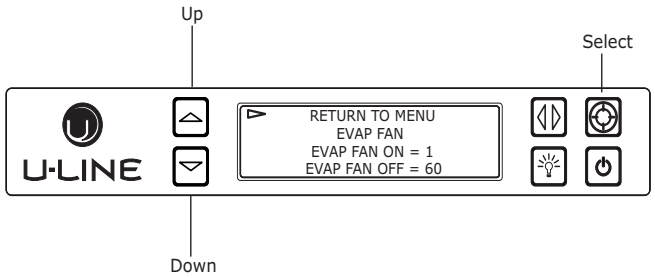

The Evap Fan option in the service menu allows servicers to change the Evaporator Fan runtime (in minutes) from 0 to 98 and OFF cycle time 0 to 98.

To access Evap Fan

1. Press ▽ to select "Evap Fan".
2. Press ◎.
3. Press △ and ▽ to scroll through available settings.

To exit the Evap Fan menu, press △ to select "Return to Menu" and press ◎ to confirm.

Mullion (Drawer Models)

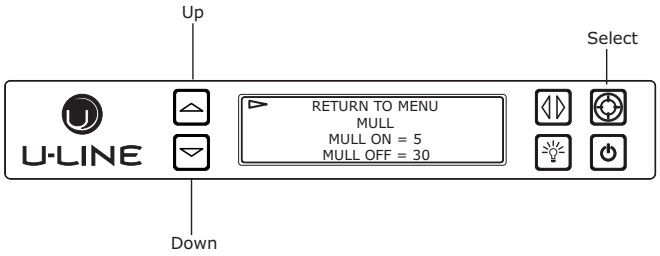

The Mullion (MULL) option in the service menu allows servicers to change the ON/OFF time in minutes of the MULL heater (DWR only) from 0 to 98.

To access Mullion

1. Press ▽ to select "MULL".
2. Press ◎.
3. Press △ and ▽ to scroll through available settings.

To exit the MULL menu, press △ to select "Return to Menu" and press ◎ to confirm.

Factory Default

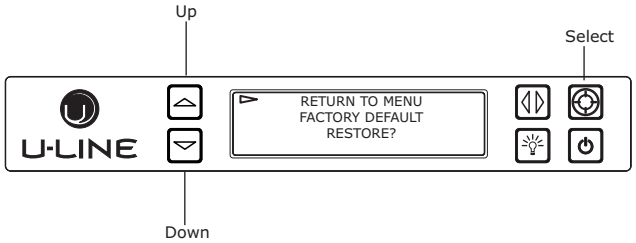

Factory Default will restore all settings to their factory default.

To access Factory Default

1. Press ▽ to select "Factory Default".
2. Press ◎.

To restore settings to their factory default.

3. Press ▽ to select "Restore?" and press ◎
4. "Restore?" will change to "Restoring..." while settings are restored. When restoration is complete, "Restoring..." will return to "Restore?".

To exit Factory Default, press △ to select "Return to Menu" and press ◎ to confirm.

Re-Select Model

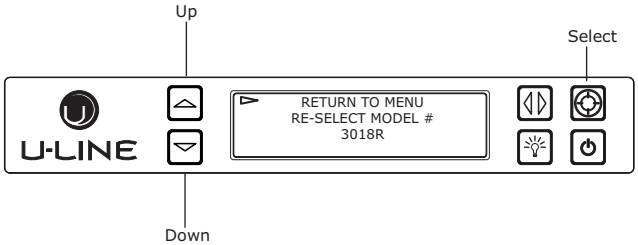

NOTICE

Before altering model selection U-Line customer service must be notified. Failure to notify customer service will result in voiding of the manufacturer warranty.

Re-Select Model allows the units model information to be modified. Changing the units model completely reprograms available zones, relay assignments, DC output assignments etc.

To access Re-Select Model

1. Press ▽ to select "Re-Select Model".

2. Press ◎.

To change model setting

3. Press ▽ to select "Model=" and press ◎. "Model" will begin to flash.

4. Press △ or ▽ to scroll through each available model.

5. Press ◎ to confirm. While processing, the ► will momentarily change to ✳ .

To exit Re-Select Model, press △ to select "Return to Menu" and press ◎ to confirm. (Power cycling unit is recommended after re-selecting model.)

Factory Wi Fi

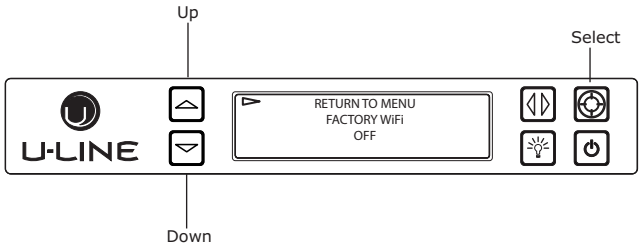

The Factory Wi-Fi option is only used in manufacturing and should always be OFF.

1. Press ▽ to select "Factory Wi Fi".

2. Press ◎.

3. Press △ or ▽ select "OFF".

To exit the Factory Wi Fi menu press △ to select "Return to Menu" and press ◎ to confirm outputs.

Set Points

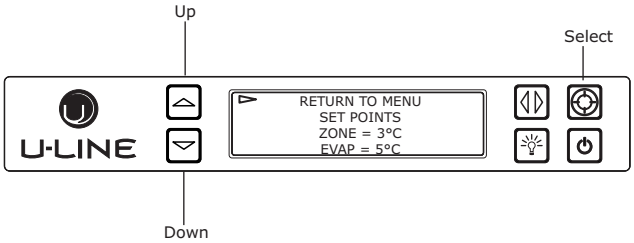

The Set points menu contains options to modify both the Zone and Evap set points. Changes to the zone set point will be reflected on the main screen. Changes to the evap set point alter the temperature the evaporator needs to meet during a defrost cycle.

To access Set Points

1. Press ▽ to select "Set Points".

2. Press ◎.

3. Press △ and ▽ to scroll through available set points.

To change set points

4. Press ◎, the selected set point will begin to flash.

5. Press △ or ▽ to modify the value.

6. Press ◎ to confirm setting.

To exit the Set Points menu, press △ to select "Return to Menu" and press ◎ to confirm.

Fan Delay (excludes ZWC)

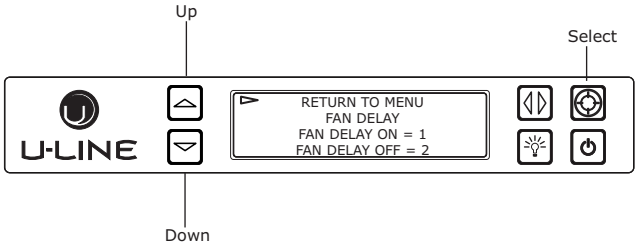

The Fan Delay menu option allows the modification of fan run times during and after a cooling cycle. In order to allow time for the evaporator to properly cool, the evaporator fan is delayed from starting with the cooling cycle for a given amount of time. In order to remove as much warmth as possible from the cabinet the evaporator fan will continue to run at the end of the cooling cycle for a given amount of time.

Fan Delay On=

"Fan Delay On" is the amount of time in minutes the fan will be delayed from starting from the beginning of a cooling cycle.

Fan Delay Off=

"Fan Delay Off" is the amount of time in minutes the fan will continue to run at the end of a cooling cycle.

To access Fan Delay

1. Press to select "Fan Delay".
2. Press .

To change fan delay

3. Press to select either "Fan Delay On" or "Fan Delay Off" and press . The chosen option will begin to flash.
4. Press or to change settings.
5. Press to confirm.

To exit Fan Delay, press to select "Return to Menu" and press to confirm.

Showroom Mode

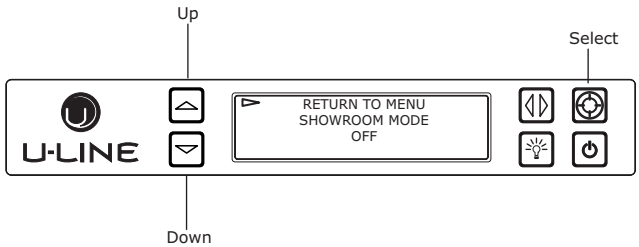

Showroom displays a number of features and allows the unit to be powered on without running the cooling system.

To toggle showroom mode

1. Press to select "Showroom Mode".
2. Press .
3. Press to select "Off" and press . "Off" will begin to flash.
4. Press or to toggle between off and on.
5. Press to confirm.

If set to "on" showroom mode will begin immediately. To exit showroom mode press and hold for 5 seconds and release. The display will show a countdown to switching the unit off. Press again and the unit will immediately switch on retaining the presets from before it entered showroom mode.

To exit the showroom mode menu, press to select "Return to Menu" and press to confirm.

Thermistors

Thermistors are used for various temperature readings. Thermistors provide reliable temperature readings using a resistance which varies based on surrounding temperatures. If a faulty thermistor is suspected it may be tested using an accurate ohmmeter.

All thermistors in the unit are identical. If a thermistor is suspected of being defective the resistance can be verified. Place the thermistor in an ice water bath, the resistance should read 16.1k OHMs +/-5% on your meter.

Thermistor connections must be kept clean. A thermistor connection that has become corroded can cause resistance values from the thermistor to change as they pass through a dirty connection to the board.

It is for that reason that we apply dielectric grease to all of our thermistor connections. Dielectric grease will help to keep thermistor connections clean and dry.

If you change a thermistor in the unit please re-apply dielectric grease to the connection. If you encounter a dirty thermistor connection, you should replace the thermistor and the thermistor harness.

Thermistor error information can be found in the Control Operations - Service section.

This unit has **five** thermistors.

Thermistor one (Zone):

Located along the right hand side wall in the top/left compartment. It is used to maintain the operating temperature within that zone.

Thermistor two (Evaporator):

Located on the evaporator in the top/left compartment. It is used for defrost.

Thermistor three (Zone):

Located along the right hand side wall in the bottom/right compartment. It is used to maintain the operating temperature within that zone.

Thermistor four (Evaporator):

Located on the evaporator in the bottom/right compartment. It is used for defrost.

Thermistor five (Ambient):

Located in the base of the unit (secured to the condenser). It is used to monitor the ambient temperature within the base compartment. It is used for diagnostics.

THERMISTOR FAILURE

Zone Thermistors

If a zone thermistor(s) in the unit fails the unit will continue to cool in a backup mode (Self Preservation Mode) to preserve the integrity of the contents. The unit will otherwise operate normally.

2000 Series Self Preservation Mode:
The unit will cycle on for 10 minutes then off for 40 minutes.

3000 Series Self Preservation Mode:
Cycle times determined by zone - see chart. The error will be displayed on the main display, “Self Test” and logged in “All Errors.”

Self Preservation Mode Data Table - 3000 Series

Mode	ON	OFF
Beverage/Drinks	10	45
Market/Fresh	10	45
Root	5	90
Pantry	10	45
Deli	10	45
White Wine	5	60
Red Wine	5	60
Sparkling Wine	10	60
Polar	55	5

Evaporator Thermistors

If an evaporator thermistor fails the unit will rely on a preset defrost timer during defrost cycles. The unit will otherwise operate normally. Refer to defrost section.

Ambient Thermistor

If the thermistor fails the unit will operate normally.

Thermistor Resistance Data

Temp (F)	Temp (C)	Nominal Resistance (OHMS)*
-40	-40	169157
-31	-35	121795
-22	-30	88766
-13	-25	65333
-4	-20	48614
5	-15	36503
14	-10	27681
23	-5	21166
32	0	16330
41	5	12696
50	10	9951
59	15	7855
68	20	6246
77	25	5000
86	30	4029
95	35	3266
104	40	2665
113	45	2186
122	50	1803
131	55	1495
140	60	1247
149	65	1044
158	70	879
167	75	743
176	80	631

* (+/-5%)

Defrost

The models below have automatic or frost free design and do not require manual defrosting under normal conditions.

Defrost Settings				
Base Model	**Variant(s)**	**Compressor Run Time Between Defrost (Hours)**	**Duration in Minutes (Maximum)**	**Stop Temperature °F (°C)**
1224	RF	12	45	15 (-9)
1215/1224/2218/2245/ 2224/2260	WC, ZWC	12	45	45 (7)
1215/1224/2218/2245/ 2224/2260	R, RSOD, RDC, BEV, DC, DWR, RGL	12	45	42 (6)
CO29	F	12	18	n/a
CO1224	F	12	18	45 (7)
1224FZR	Freezer Mode	6	45	42(6)
1224FZR	Refrigerator Mode	12	45	42(6)

The defrost settings for 3000 series models are determined by zone.

Defrost Settings by Zone (3000 Series)				
Zones	**Compressor Run Time Between Defrost (Hours)**	**Duration in Minutes (Minimum)**	**Duration in Minutes (Maximum)**	**Stop Temperature °F (°C)**
Beverage/Drinks	12	5	60	42 (6)
Market/Fresh	12	5	60	42 (6)
Root/Root Cellar	12	5	60	45 (7)
Pantry	12	5	60	42 (6)
White Wine	12	5	60	45 (7)
Red Wine	12	5	60	45 (7)
Sparkling Wine	12	5	60	45 (7)
Polar	6	5	20	42 (6)
Deli	12	5	60	42 (6)

Remove Fan and Cover

CONVECTION COOLING

This unit is equipped with an advanced convection cooling system. Convection cooling stabilizes cabinet temperature, cools product faster and increases energy efficiency.

Evaporator Fan

The evaporator fan is responsible for circulating warm air from the refrigeration zone, past the evaporator and back into the refrigerated zone.

The evaporator fan is factory set to have a 1 minute delay at the beginning of a cooling cycle. This delay gives the evaporator time to cool properly before warm air is passed over it. The fan will continue to run for an additional 2 minutes at the end of a cooling cycle. Fan delay times can be modified through the service menu.

Evaporator fan operation is also determined by door switch state. If the door switch circuit opens, the fan will stop. When the door switch circuit is closed the fan will either continue running with the cooling cycle, or if not currently cooling, the fan will run for 1 minute to circulate air and clear any condensation that may have appeared on glass doors and shelves.

Note: If the unit is set to sabbath mode, the evaporator fan will no longer respond to the state of the door switch.

In order to operate efficiently, the evaporator fan blade and vents should be unobstructed and free of any dust buildup.

Evaporator Fan Replacement

Should an evaporator fan need to be replaced follow the steps below.

1. Remove any product from the unit.

2. Uninstall unit.

3. Disconnect power to the unit.

4. Remove rear center cover from unit.

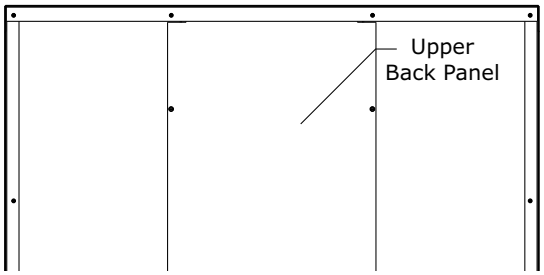

5. Disconnect fan electrical connection to the fan which must be changed.

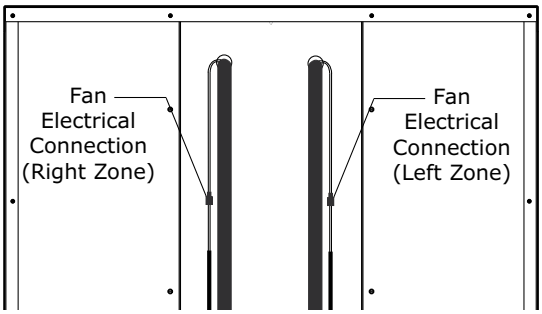

6. Remove insulating foam from refrigerant line pass-through hole as needed to gain clearance to pass fan plug through.

7. Remove internal bins and bin holders, wine racks or shelf supports as dictated by unit, on the side that fan motor needs to be changed in.

8. If the unit has bins or wine racks, remove the rear mounting screw only from the slide assembly on each side. This will allow the slide to pivot downward from the front mounting screw allowing ample room to remove the fan cover.

9. Remove thermistor cover. From the zone with the defective fan.

10. Remove two evaporator cover screws from top of evaporator cover to be removed.

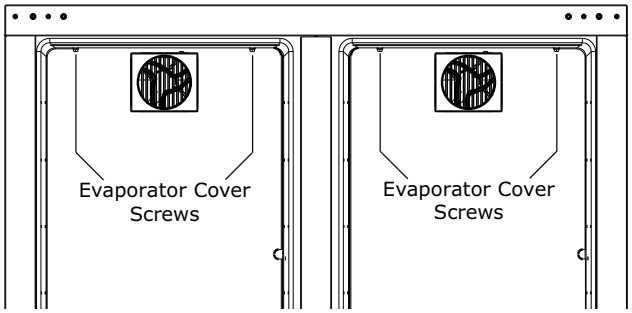

11. Grasp evaporator fan cover and gently pull plate away from the rear of the unit.

12. While pulling the evaporator cover clear of the unit, it may be necessary to use your free hand to manipulate the fan plug end through the pass-through hole.

13. Remove the 4 screws mounting the fan shroud to the evaporator plate.

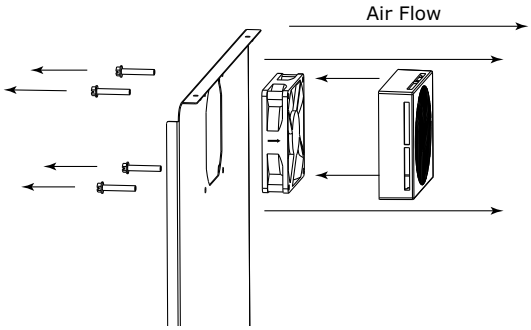

14. Remove and replace fan. Take special care to properly route fan wire.

NOTICE

Fan must be oriented to pull air in through lower evaporator cover vents and push air out at fan mounting location.

15. Installation is the reverse of removal.

16. Care must be taken to assure that the bottom of the evaporator cover gets reinstalled behind the front edge of the drain trough.

17. Use sealant gum to seal any holes in the rear of the unit before replacing the rear cover.

18. Reinstall the unit taking care to level, center and secure as you found it.

U-Line Corporation (U-Line) Limited Warranty

One Year Limited Warranty

For one year from the date of original purchase, this warranty covers all parts and labor to repair or replace any part of the product that proves to be defective in materials or workmanship. For products installed and used for normal residential use, material cosmetic defects are included in this warranty, with coverage limited to 60 days from the date of original purchase. All service provided by U-Line under the above warranty must be performed by a U-Line factory authorized servicer, unless otherwise specified by U-Line. Service provided during normal business hours.

Two Year Limited Warranty (5 Class Product)

For two years from the date of original purchase, this warranty covers all parts and labor to repair or replace any part of the product that proves to be defective in materials or workmanship. For products installed and used for normal residential use, material cosmetic defects are included in this warranty, with coverage limited to 60 days from the date of original purchase. All service provided by U-Line under the above warranty must be performed by a U-Line factory authorized servicer, unless otherwise specified by U-Line. Service provided during normal business hours.

Available Second & Third Year Limited Warranty

In addition to the standard one and two year warranties outlined above, U-Line offers a one year extension of the warranties from the date of purchase, free of charge. To take advantage of this extension, you must register your product with U-Line within 60 days from the date of purchase at u-line.com and provide proof of purchase.

Five Year Sealed System Limited Warranty

For five years from the date of original purchase, U-Line will repair or replace the following parts, labor not included, that prove to be defective in materials or workmanship: compressor, condenser, evaporator, drier, and all connecting tubing. All service provided by U-Line under the above warranty must be performed by a U-Line factory authorized servicer, unless otherwise specified by U-Line. Service provided during normal business hours.

Terms

These warranties apply only to products installed in any one of the fifty states of the United States, the District of Columbia, or the ten provinces of Canada. The warranties do not cover any parts or labor to correct any defect caused by negligence, accident or improper use, maintenance, installation, service, repair, acts of God, fire, flood or other natural disasters. The product must be installed, operated, and maintained in accordance with your product's User Guide.

The remedies described above for each warranty are the only ones that U-Line will provide, either under these warranties or under any warranty arising by operation of law. U-Line will not be responsible for any consequential or incidental damages arising from the breach of these warranties or any other warranty, whether express, implied, or statutory. Some states do not allow the exclusion or limitation of incidental or consequential damages, so the above limitation or exclusion may not apply to you. These warranties give you specific legal rights, and you may also have other rights which vary from state to state.

Any warranty that may be implied in connection with your purchase or use of the product, including any warranty of *merchantability* or any warranty *fit for a particular purpose* is limited to the duration of these warranties, and only extends to five years in duration for the parts described in the section related to the five year limited warranty above. Some states do not allow limitations on how long an implied warranty lasts, so the above limitations may not apply to you.

- The warranties only apply to the original purchaser and are non-transferable.
- The second, third, and five year warranties cover products installed and used for normal residential or designated marine use only.
- The warranties apply to units operated outside only if designed for outdoor use by model and serial number.
- U-Line Commercial products are covered by the one year and 5 year limited warranties and are not eligible for the second and third year limited warranties.
- Replacement water filters, light bulbs, and other consumable parts are not covered by these warranties.
- The start of U-Line's obligation is limited to four years after the shipment date from U-Line.
- In-home instruction on how to use your product is not covered by these warranties.
- Food, beverage, and medicine loss are not covered by these warranties.
- If the product is located in an area where U-Line factory authorized service is not available, you may be responsible for a trip charge or you may be required to bring the product to a U-Line factory authorized service location at your own cost and expense.
- Units purchased after use as floor displays, and/or certified reconditioned units, are covered by the limited one year warranty only and no coverage is provided for cosmetic defects.
- Signal issues related to Wi-Fi connectivity are not covered by these warranties.

For parts and service assistance, or to find U-Line factory authorized service near you, contact U-Line:
8900 N. 55th Street, Milwaukee, WI 53223 • u-line.com • onlineservice@u-line.com • +1.414.354.0300

Copyright U-Line Corporation. All Rights Reserved. | Publication Number 30379 | 3/2024 Rev. Q