KOLD-DRAFT®

ice machines • bins • crushers • dispensers

Automatic Ice Cube Maker

User Manual

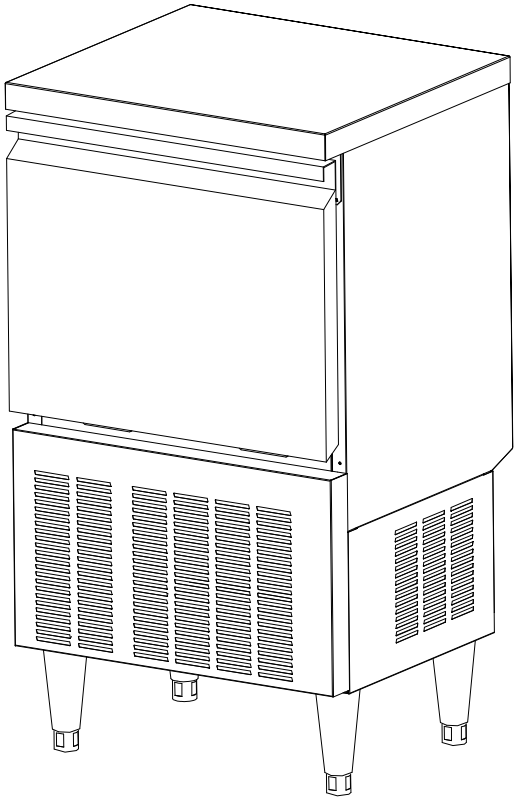

Be sure unit is standing upright 24 hours prior to plug-in.

Model: KD-50/KD-70/KD-110

TABLE OF CONTENTS

Page

ICE MAKER SAFETY……..2

IMPORTANT SAFEGUARDS……3 - 5

TECHNICAL INFORMATION…… 5

COMPONENT LOCATIONS ……6

ICE MAKER INSTALLATION …… 7 – 12

Unpacking……7

Installing the Adjustable Feet……7

Location Requirements……8

Electrical Requirements……9

Leveling the Ice Maker……..10

Water Supply and Drain Connections ……10 – 11

Installation……12

OPERATION……13 – 15

Final Checklist before Operation……13

Operating Method……14

How the Machine Makes Ice……14-15

Normal Sounds……15

Preparing the Ice Maker Long Storage ……15 – 16

CLEANING AND MAINTENANCE ……16 – 23

Exterior Cleaning…… 17

Condenser Cleaning……17

Interior Cleaning……18 – 20

Ice Making System Cleaning……20 – 21

Control Box……22 – 23

MAJOR FUNCTIONS……23

TROUBLESHOOTING……24 – 25

We reserve the right to make changes in specifications and design without prior notice.

ICE MAKER SAFETY

Your safety and the safety of others are very important.

We have provided many important safety messages in this manual and on your appliance. Always read and obey all safety messages.



This is the Safety Alert Symbol. This symbol alerts you to potential hazards that can injure or kill you and others. All safety messages will follow the Safety Alert Symbol and either the words "DANGER", "WARNING" OR "CAUTION".

⚠ DANGER ⚠

DANGER means that failure to heed this safety statement may result in severe personal injury or death.

⚠ WARNING

WARNING means that failure to heed this safety statement may result in extensive product damage, serious personal injury, or death.

CAUTION

CAUTION means that failure to heed this safety statement may result in minor or moderate personal injury, or property or equipment damage.

All safety messages will alert you to what the potential hazard is, tell you how to reduce the chance of injury, and let you know what can happen if the instructions are not followed.

IMPORTANT SAFETY INSTRUCTIONS

WARNING: To reduce the risk of fire, electric shock or injury when using your ice maker, follow these basic precautions:

- *Plug into grounded 3-prong outlet*
- *Do not remove grounding prong*
- *Do not use an adapter*
- *Do not use an extension cord*
- *Disconnect power before cleaning*
- *Disconnect power before servicing*
- *Replace all panels before operating*
- *Use 2 or more people to move & install ice maker*

SAVE THESE INSTRUCTIONS

IMPORTANT SAFEGUARDS



Before the ice maker is used, it must be properly positioned and installed as described in this manual, so read the manual carefully. The supplier strongly recommends that you have a professional install your new machine. The warranty may be affected or voided by an improper installation. To reduce the risk of fire, electrical shock or injury when using the ice maker, follow basic precautions, including the following:

⚠ DANGER ⚠

- Plug into a grounded 3-prong outlet; do not remove grounding prong, do not use an adapter, and do not use an extension cord.
- It is recommended that a separate circuit, serving only your ice maker, be provided. Use receptacles that cannot be turned off by a switch or pull chain.
- Do not connect or disconnect the electric plug when your hands are wet.
- Never clean ice maker parts with flammable fluids. These fumes can create a fire hazard or explosion. Do not store or use gasoline or other flammable vapors and liquids in the vicinity of this or any other appliance. The fumes can create a fire hazard or explosion.
- Before proceeding with cleaning and maintenance operations, make sure the power line of the unit is disconnected and the water line is shut off. (EXCEPTION: when cleaning the machine's ice making and water systems – see pages 22-24).
- Before operating, put all panels back into place.
- Unplug the ice maker or disconnect power before cleaning or servicing. Failure to do so can result in electrical shock or death.
- Do not attempt to repair or replace any part of your ice maker unless it is specifically recommended in this manual. All other servicing should be referred to a qualified technician.

⚠ WARNING

- Use two or more people to move and install ice maker. Failure to do so can result in back or other injury.
- To ensure proper ventilation for your ice maker, the front of the unit must be completely unobstructed. Choose a well-ventilated area with temperatures above 50ºF (10ºC) and below 100ºF (38ºC). This unit MUST be installed in an area protected from the elements, such as wind, rain, water spray or drips.
- The ice maker should not be located next to ovens, grills or other sources of high heat.
- The ice maker must be installed with all electrical, water and drain connections in accordance with state and local codes. A standard electrical supply (115 VAC only, 60Hz, 15A), properly grounded in accordance with the National Electrical Code and local codes and ordinances is required.
- Do not kink or pinch the power supply cord or drain lines between the ice maker and the cabinet.
- The fuse (or circuit breaker) size should be 15 amperes.

- It is important for the ice maker to be leveled in order to work properly. You may need to make several adjustments to level it.
- All installations must be in accordance with local plumbing code requirements.
- Make certain that the hoses are not pinched or kinked or damaged during installation.
- Check for leaks after connection.
- Never allow children to operate, play with or crawl inside the ice maker.
- Although the unit has been tested at the factory, due to long-term transit and storage, the first batch of cubes must be discarded.
- Never turn the water supply tap off when the ice maker is working.
- If the ice maker will not be used for a long time, before the next use it must be thoroughly cleaned. Follow carefully any instructions provided for cleaning or use of sanitizing solution. Do not leave any solution inside the ice maker after cleaning.
- DO NOT touch the condenser fins. The condenser fins are sharp and can be easily damaged.
- DO NOT use solvent-based cleaning agents or abrasives on the interior. These cleaners may transmit taste to the ice cubes, or damage or discolor the interior.
- The ice machine cleaner contains acids. DO NOT use or mix with any other solvent based cleaner products. Use rubber gloves to protect hands. Carefully read the material safety instructions on the container of the ice machine cleaner.
- Do not use this apparatus for other than its intended purpose.

SAVE THESE INSTRUCTIONS

Electrical Connection

Do not, under any circumstances, cut or remove the third (ground) prong from the power cord. For personal safety, this appliance must be properly grounded. The power cord of this appliance is equipped with a 3-prong grounding plug that mates with a standard 3-prong grounding wall outlet to minimize the possibility of electric shock hazard from the appliance. Have the wall outlet and circuit checked by a qualified electrician to make sure the outlet is properly grounded. When a standard 2-prong wall outlet is encountered, it is your responsibility and obligation to have it replaced with a properly grounded 3-prong wall outlet. The ice maker should always be plugged into its own individual electrical outlet which has a voltage rating that matches the rating label on the appliance. This provides the best performance and also prevents overloading house wiring circuits which could cause a fire hazard from overheated wires. Never unplug your ice maker by pulling on the power cord. Always grip the plug firmly and pull straight out from the outlet. Repair or replace immediately all power cords that have become frayed or otherwise damaged. Do not use a cord that shows cracks or abrasion damage along its length or at either end. When moving the ice maker, be careful not to damage the power cord.

Extension Cord

Because of potential safety hazards under certain conditions, it is strongly recommended that you do not use an extension cord with this ice maker.

TECHNICAL INFORMATION

Model	KD-50	KD-70	KD-110
Rated power	115V AC~60Hz		
Refrigerant	R134a, 5.64oz	R134a, 5.93oz	R134a, 8.82oz
Ice-making/Ice-harvest rated current	3.0A/4.0A	4.1A/5.1A	6.0A/9.0A
High/Low side pressure	320psig/120psig	320psig/120psig	320psig/120psig
Width*depth*height	15.5”x17.7”x36.7”	19.7”x17.7”x36.7”	24.8”x20.7”x36.7”
Ice storage capacity	26 lbs maximum	39 lbs maximum	60 lbs maximum
Ice-making capacity	40 lbs/day*	70 lbs/day*	105 lbs/day*
Unit weight	83.6 lbs	100 lbs	117.7 lbs
Type of ice	Cube		
Ice cube dimensions	9/8″ x 9/8″ x 5/4″		

*Rated in accordance with ARI standard 810. (90°F (32°C) air & 70°F (21°C) water)
The actual quantity of ice produced per day can vary with room and water conditions.
The technical data and performance indices listed above should be used for reference only.
They are subject to change.

.

COMPONENT LOCATIONS

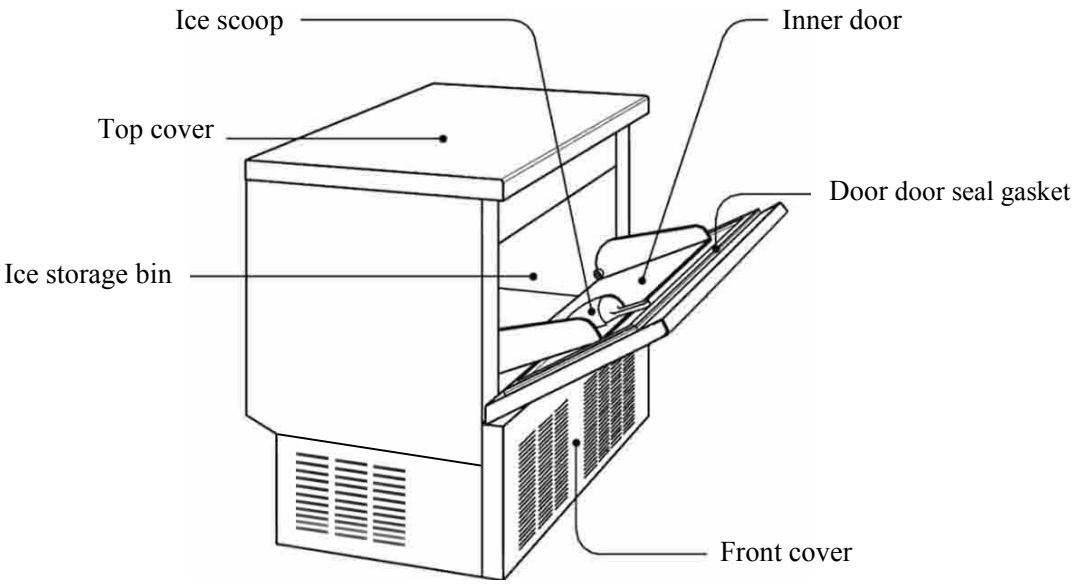

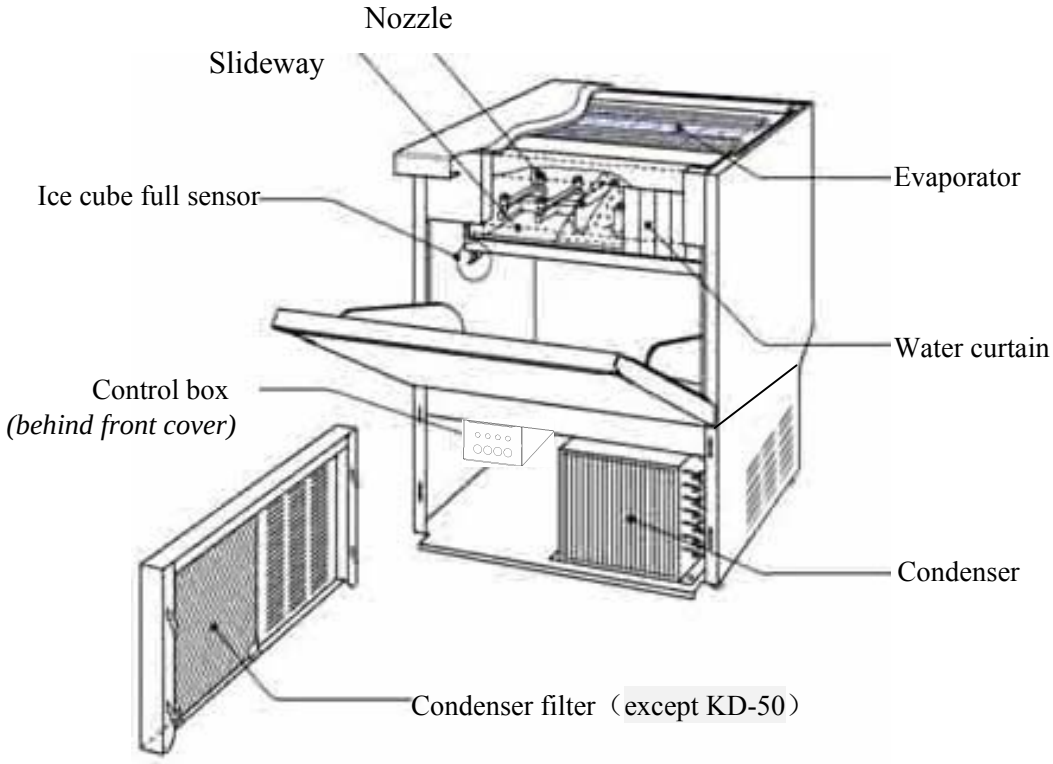

ICE MAKER INSTALLATION

Unpacking

⚠ WARNING

Excessive Weight Hazard

Use two or more people to move and install ice maker.
Failure to do so can result in back or other injury.

Remove packaging materials

IMPORTANT: Do not remove any permanent instruction labels or the data label on your ice maker.
Remove tape and glue from your ice maker before using.

- To remove any remaining tape or glue, rub the area briskly with your thumb. Tape or glue residue can also be easily removed by rubbing a small amount of liquid dish soap over the adhesive with your fingers. Wipe with warm water and dry.
- Do not use sharp instruments, rubbing alcohol, flammable fluids, or abrasive cleaners to remove tape or glue. These products can damage the surface of your ice maker.

Cleaning before use

After you remove all of the packaging materials, clean the inside of your ice maker before using it. See "Interior Cleaning" in the *Cleaning and Maintenance* section.

Installing the adjustable feet

You will find four adjustable feet packed in the ice storage bin. To install, tilt one side of the unit and screw in two adjustable feet, as illustrated. (IMPORTANT: Do not tilt the unit more than 45°) . Then tilt the other side and screw in the remaining two feet.

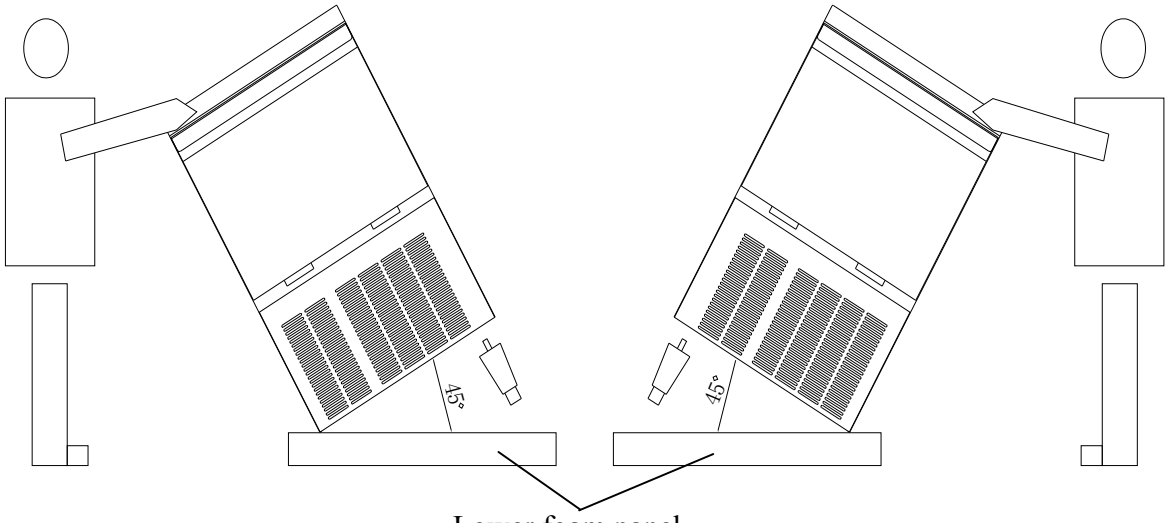

Location Requirements

INSTALLATION CLEARANCES:

TOP VIEW

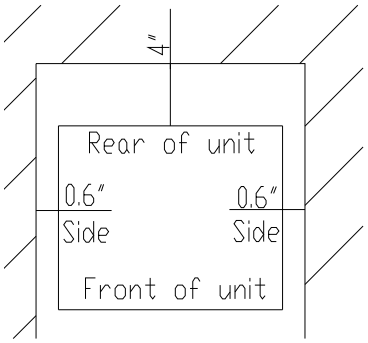

SIDE VIEW

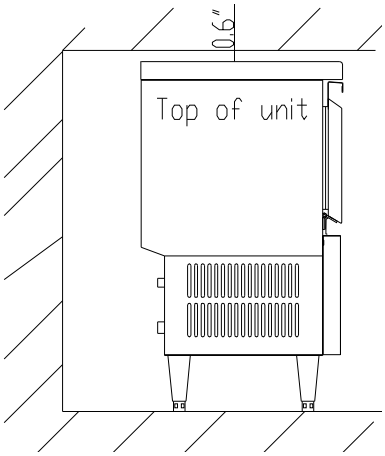

- To ensure proper ventilation for your ice maker, the front of the unit must be completely unobstructed. Allow more than 4" clearance at rear, 0.6" at top and sides for proper air circulation. The installation should allow the ice maker to be pulled forward for servicing if necessary.
- When installing the ice maker under a counter, follow the recommended spacing dimensions shown. Place electrical and water supplies and drain fixtures in the recommended locations as shown.
- Choose a well-ventilated area with temperatures above 50ºF (10ºC) and below 100ºF (38ºC). This unit MUST be installed in an area protected from the elements, such as wind, rain, water spray or drips.
- The unit should not be located next to ovens, grills or other sources of high heat.
- Installation of the ice maker requires a cold water supply inlet of 1/4 in. soft copper tubing with a shut-off valve and a gravity-drain system.
- The ice maker requires a continuous water supply with a minimum pressure of 20 psig and a static pressure not to exceed 80 psig. The temperature of the water feeding into the ice maker should be between 41°F (5°C) and 90°F (32°C) for proper operation.

⚠ WARNING

Normal operating ambient temperature should be between 50ºF (10ºC) to 100ºF (38ºC). Normal operating water temperature should be between 41ºF (5ºC) and 90ºF (32ºC). Operation of the ice maker for extended periods outside of these normal temperature ranges may affect production capacity.

- In general, it is always a good idea to filter the water. A water filter, if it is of the proper type, can remove taste and odors as well as particles. Where water is very hard, softened water may result in white, mushy cubes that stick together.
- The ice maker must be installed with all electrical, water and drain connections in accordance with state and local codes.
- The unit should be located on a firm and leve urface. It is important for the ice maker to be leveled in order to work properly. If needed, you can adjust the height of the ice maker by revolving the feet. See the "Leveling the Ice Maker" section.

Electrical Requirements

⚠ DANGER ⚠



Electrical Shock Hazard

Plug into a grounded 3-prong outlet.
Never remove the grounding prong from the plug.
Never use an adapter.
Never use an extension cord.
Failure to follow these instructions can result in fire, electrical shock or death.

- A standard electrical supply (115VAC, 60 Hz, 15 A), properly grounded in accordance with the National Electrical Code and local codes and ordinances is required.
- IMPORTANT: Do not kink or pinch the power supply cord between the ice maker and wall or cabinet.
- Before you move your ice maker into its final location, it is important to make sure you have the proper electrical connection.
- It is recommended that a separate circuit, serving only your ice maker, be provided. Use receptacles that cannot be turned off by a switch or pull chain.
- The fuse (or circuit breaker) size should be 15 amperes.

Recommended grounding method

For your personal safety, this appliance must be grounded. This appliance is equipped with a power supply cord having a 3-prong grounding plug. To minimize possible shock hazard, the cord must be plugged into a mating 3-pronged and grounding-type wall receptacle, grounded in accordance with the National Electrical Code and local codes and ordinances. If a mating wall receptacle is not available, it is the personal responsibility of the customer to have a properly grounded, 3-prong wall receptacle installed by a qualified electrician.

Leveling the Ice Maker

Once the ice cube machine is set in its enclosure, if the base is not level, you can adjust the feet by rotating the under block (see below) until the machine is level.

Turning the under block counter-clockwise reduces the machine's height

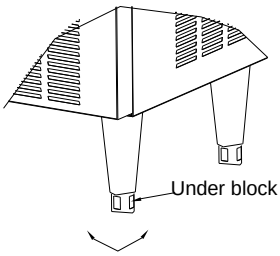

Turning the under block clockwise increases the machine's height

It is important for the ice maker to be leveled, or water may not flow properly through the evaporator (ice mold). Ice production will be lower than normal, and operation will be noisy.

Adjust the height of the under block of the adjustable foot, rotating it to the right (counter-clockwise) to lower that side of the ice maker. Turning the under block to the left (clockwise) raises that side of the ice maker.

Water Supply and Drain Connections

The water supply and drain should be ready at the point of installation. A wall outlet directly behind the ice maker will make installation easier.

IMPORTANT:

1. *All installations must be in accordance with local plumbing code requirements. Professional installation is recommended.*
2. *Make certain that the hoses are not pinched or kinked or damaged during installation.*
3. *Check for leaks after connection.*

Tools required:

- ½ in. open-end wrench
- Phillips screwdriver

Connecting the water line:

Turn off main water supply. Turn on nearest faucet long enough to clear line of water.
Find a ½ in. to ¾ in. vertical cold water pipe near the installation location. A shut-off valve must be installed to the main water supply. If the water pipe has a plain piece of copper tubing, attach a ¼" O.D. compression union to the tubing and remove the nut.
Connect nuts of water supply hose to tap and water inlet connector of the ice machine. Tighten firmly by hand, then one-half turn with wrench.
Turn on main water supply and tap. Check for water supply connection leaks. Tighten any connections or nuts that leak.

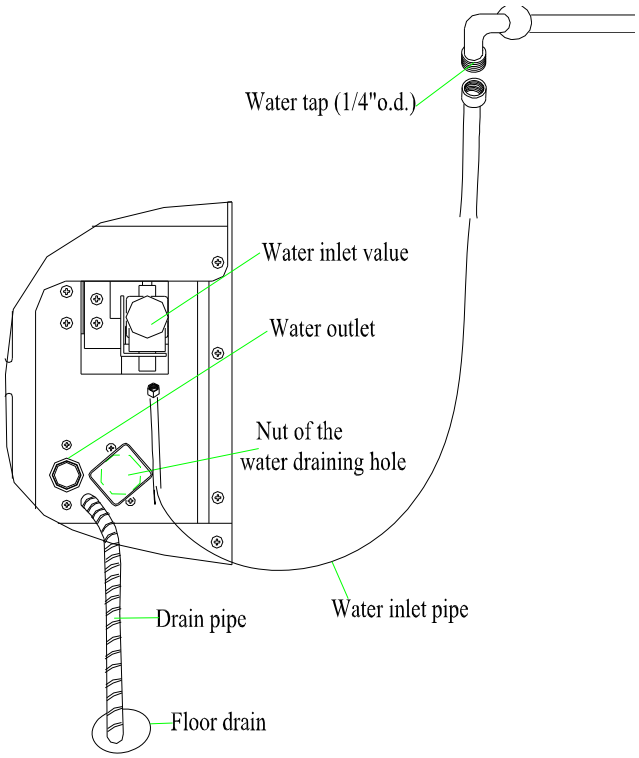

NOTE: Connection to the water line may vary according to installation requirements.

Drain

IMPORTANT: <u>This ice maker is not a freezer, it must connect to a drain line</u>. Your machine comes equipped with a gravity drain. Depending on your plumbing setup, a condensation pump may be required. Poor drainage will cause a high rate of melting in the ice storage bin and may cause flooding or your machine to shut off.

Connecting the drain line:

NOTE: If there is a drain line near the ice maker, the best choice is to drain water to the drain line through the drain hose provided with ice maker.

1. Locate the floor drain near the ice maker. The distance should be less than 5 feet since the length of the long drain hose provided with the ice maker is about 5 feet.
2. Find the drain outlet on the back of ice maker, connect the drain outlet to the water draining hose, and insert the other side of the hose into the drain line.
   NOTE: The drain hose should never be allowed to hang or loop higher than the bottom of the ice storage bin.
3. All horizontal runs of drain lines must have a fall of 1/4” per foot. An air gap will likely be required between the ice maker drain hose and the drain/waste receptacle. A stand pipe with a trap below it would be acceptable for the drain/waste receptacle. A floor drain is also acceptable.
4. Pour 1 gallon of water into the ice storage bin to check for leaks at all drain connections and at the drain water hole. Tighten any connections or nuts that leak.

Installation Types

This ice maker has been designed for Mobile (free-standing), Enclosed (as under a cabinet) or Built-in (sealed) installation indoor. In any case, there must be adequate air space around the unit for proper ventilation. (See diagrams on page 7.)

Mobile installation:

A mobile installation will allow you to install the ice maker free-standing in any place you desire provided you have access to a water supply. You must follow the stated instructions for

a. Electrical requirements
b. Water supply and drain connections
c. Leveling the ice maker

Enclosed Installation:

An enclosed installation will allow you to install the ice maker under a cabinet or inside a kitchen cabinet provided the required clearance space around the ice maker is respected. This installation has the same requirements as a mobile installation.

Built-in Installation:

If this method of installation is chosen, it will still be necessary to allow adequate ventilation space around the unit. The following additional items must be observed.

1. Place ice maker in front of installation location. Remove the legs and place the unit flat on the floor or on a platform depending on your installation requirements.
2. The water supply line must be plumbed before connecting to the ice maker.
3. Connect the drain hose.
4. Turn on main water supply and tap. Check for water supply connection leaks. Tighten every connection (including connections at the water inlet).
5. If the electrical outlet for the ice maker is behind the cabinet, plug in the ice maker.
6. Push the ice maker into position.
7. Seal all around the cabinet to the floor with an approved caulking compound.

OPERATION

Final Check List before Operation

1. Have all packing materials and tape been removed from the interior and exterior of the ice maker?
2. Did you clean the ice storage bin?
3. Have the installation instructions been followed, including connecting the machine to water, drain and electricity?
4. Has the machine been leveled?
5. Is the ice maker in a site where the ambient temperature is between 10º C (50º F) and 38ºC (100ºF) and the water temperature within 5º C (41º F) and 32º C (90º F) all year round?
6. Has the water supply pressure been checked to ensure a minimum of 20 psig with a static pressure not to exceed 80 psig?
7. Is there a clearance of at least 4 in. at the rear and top, 0.6 in. at the sides for proper air circulation?
8. Has the power supply voltage been checked or tested against the nameplate rating?
9. Has the machine been properly grounded and connected into a three prong AC outlet?
10. Is the ice maker plugged in?
11. Did you turn on the main water supply and the tap?
12. Did you check for leaks at all water supply and drainpipe connections?
13. Has the machine been connected to a floor drain? If you do not have a floor drain a condensation pump will be required.

Operating Method

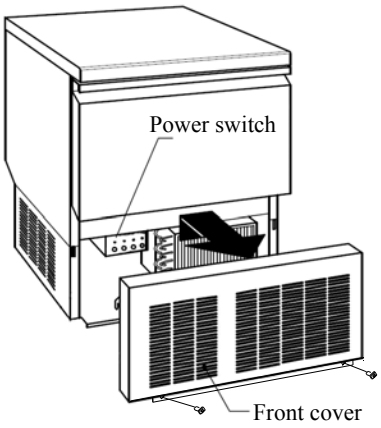

1. Remove the two screws at the bottom of the front cover.

2. Grasp the right and left sides of the front cover，raise it a little and then take it off. Press the ON/OFF switch beside the condenser. The light will be on. The ice maker will startworking automatically and feeding water.

3. After the first feeding of the water, the machine will automatically go to the ice making stage, and the sound of water spraying will be heard.

4. Ice will be harvested to the ice storage bin. When the storage bin is filled to the point that the ice-full sensor is covered, the ice maker will automatically stop working. The machine will restart making ice once the storage bin is less than full.

5. Excess water will flow through the drain outlet at the back of the machine and empty into the floor drain.

IMPORTANT:

- *Although the unit has been tested at the factory, due to long-term transit and storage, the first batch of cubes must be discarded.*
- *Never turn the water supply tap off when the icemaker is working.*

How the Machine Makes Ice

There are two distinct cycles: freeze and harvest.

During the freeze cycle, water is sprayed against the evaporator surface.

In the harvest cycle, the ice is released and water enters the machine. A complete cycle takes about 30 minutes, but is dependent on temperature and operating conditions.

Freeze: During the freeze cycle the compressor is pumping refrigerant, the fan motor is blowing air, and the water pump is circulating water. When the batch of ice has been fully formed, the ice maker stops the freeze cycle and begins to harvest the ice.

Harvest: During the harvest cycle the compressor is still operating, but the water pump has stopped. Two other components have been energized: the hot gas valve and the water inlet valve. These two valves open and warm up the freezing surface, allowing the cubes to fall into the bin. The freeze cycle will restart when all the cubes have been harvested.

How the machine uses water:

The ice maker begins with a fixed charge of water that is contained in the water sump. As the water is sprayed against the freezing evaporator surface , the portion of water that does not contain mineral impurities will freeze and stick to the ice cube molds. freezing portion of the ice-making cycle, the water in the sump will become highly concentrated with mineral impurities. During the harvest cycle, fresh water flows into the machine to dilute the bin water and rinse the concentrated minerals down the drain.

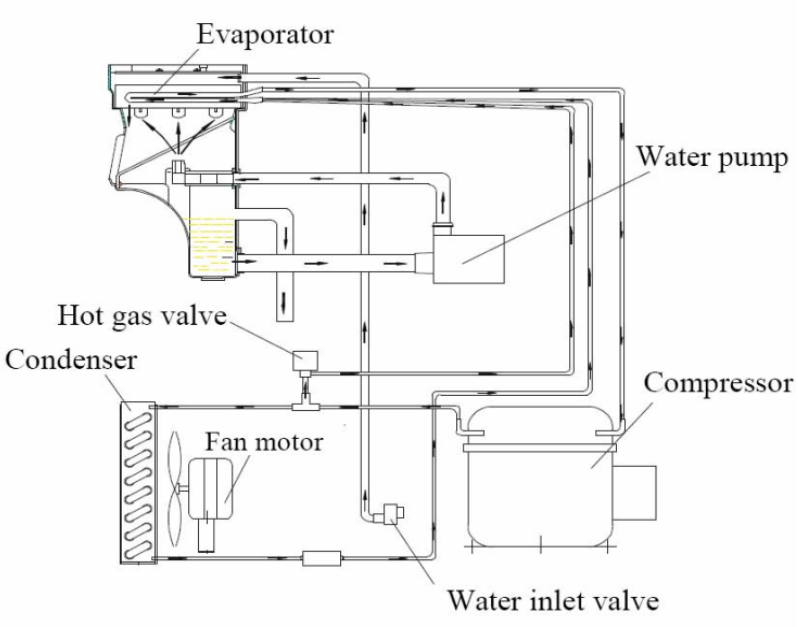

Normal Sounds

Your new ice maker may make sounds that are not familiar to you. Most of the new sounds are normal. Hard surfaces like the floor and walls can make the sounds seem louder than they actually are. The following describes the kinds of sounds that might be new to you and what may be making them.

- You will hear a swooshing sound when the water valve opens to fill the water sump for each cycle.
- Rattling noises may come from the flow of the refrigerant or the water line. Items stored on top of the ice maker can also make noises.
- The high-efficiency compressor may make a pulsating or high-pitched sound.
- Water running from the water sump to the evaporator plate may make a splashing sound.
- Water running from the evaporator to the water sump may make a splashing sound.
- As each cycle ends, you may hear a gurgling sound due to the refrigerant flowing in your ice maker.
- You may hear air being forced over the condenser by the condenser fan.
- During the harvest cycle, you may hear the sound of ice cubes falling into the ice storage bin.
- When you first start the ice maker, you may hear water running continuously. The ice maker is programmed to run a rinse cycle before it begins to make ice.

Preparing the Ice Maker for Long Storage

If the ice maker will not be used for a long time, or is to be moved to another place, it will be necessary to drain the system of water.

- Shut off the water supply at the main water source.
- Disconnect the water supply line from the water inlet valve.
- Disconnect the drain pipe to the drain line or floor drain.
- Allow the ice maker to run for an hour or more until all remaining ice cubes have been ejected from the ice maker assembly.
- Shut off the electric supply at main electrical power source.
- Screw off the nut of the water drain hole at the back of the machine, drain out water residue completely (do not loosen or screw off the nut at other times), then tighten the nut after finishing.
- Drop the door open to allow for circulation and prevent mold and mildew.
- Leave water supply line and power cord disconnected until ready to reuse.

CLEANING AND MAINTENANCE

CAUTION

If the ice maker is left unused for a long time, before the next use it must be thoroughly cleaned. Follow carefully any instructions provided for cleaning or use of sanitizing solution.
Do not leave any solution inside the ice maker after cleaning.

Periodic cleaning and proper maintenance will ensure efficiency, top performance, and long life. The maintenance intervals listed are based on normal conditions. You may want to shorten the intervals if you have pets, or there are other special considerations.

What shouldn't be done

Never keep anything in the ice storage bin that is not ice: objects like wine and beer bottles are not only unsanitary, but the labels may slip off and plug up the drain.

What should be kept clean

There are 4 things to keep clean:

1. The exterior
2. The condenser
3. The interior
4. The ice making system

⚠ WARNING

Before proceeding with cleaning and maintenance operations, make sure the power line of the unit is disconnected and the water line is shut off (EXCEPTION: Ice maker system cleaning).

Exterior Cleaning

The door and cabinet may be cleaned with a mild detergent and warm water solution such as 1 oz of dishwashing liquid mixed with 2 gallons of warm water. Do not use solvent- based or abrasive cleaners. Use a soft sponge and rinse with clean water. Wipe with a soft clean towel to prevent water spotting.

Stainless steel can discolor when exposed to chlorine gas and should be cleaned. Clean stainless steel with a mild detergent and warm water solution and a damp cloth. Never use abrasive cleaning agents.

NOTICE: Stainless steel exposed to chlorine gas and moisture, such as in areas with spas or swimming pools, may show some discoloration. Discoloration from chlorine gas is normal

Condenser Cleaning

A dirty or clogged condenser prevents proper airflow, reduces ice making capacity, and causes higher than recommended operating temperatures that may lead to component failure. Have the condenser cleaned at least once every six months.

1. Unplug the ice maker or disconnect power.
2. Remove the two screws at the bottom of the front cover.
3. Grasp the right and left sides of the front cover，raise it a little and then take it off.

NOTE: Do not use too much force, as the top side of the front cover can beinadvertently damaged by the lower corner of the door.

4. Locate the condenser filter. This can be taked off and cleaned with a brush or flowing water.
5. Remove dirt and lint from the condenser fins and the unit compartment with a brush attachment of a vacuum cleaner.
6. Put back the filter and reassemble the front cover.
7. Plug in the ice maker or reconnect power.

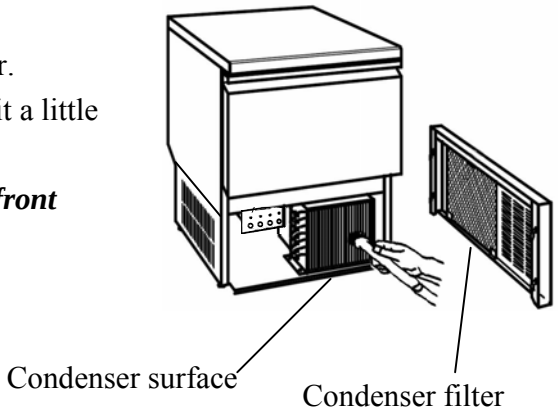

⚠ WARNING

DO NOT touch condenser fins. They are sharp and can be damaged easily.

Interior Cleaning

The ice storage bin should be sanitized occasionally. Clean the bin before the ice maker is used for the first time and reused after stopping for an extended period of time. It is usually convenient to sanitize the bin after the ice making system has been cleaned and the storage bin is empty.

1. Disconnect power to the unit.
2. Open the door and with a clean cloth, wipe down the interior with a sanitizing solution made of 1 ounce of household bleach or chlorine and 2 gallons of hot water (35℃ to 46℃).
3. Rinse thoroughly with clear water. The waste water will be drained off through the drainpipe.
4. Reconnect power to the unit.

The ice scoop should be washed regularly. Wash it just like any other food container.

⚠ WARNING

DO NOT use solvent-based cleaning agents or abrasives on the interior. These cleaners may transmit taste to the ice cubes, or damage or discolor the interior.

IMPORTANT NOTE: The sprinkler should only be cleaned when you find that some of the ice cubes are improperly shaped during ice making. Cleaning the ice making system should follow cleaning of the sprinkler.

1. Disconnect power to the unit
2. Using a Phillips screwdriver, remove the screws (A) at rear of the unit, lift up the rear side of the top cover and push it forward, then remove the top cover. Keep the parts together and set them aside.
3. Open the door.
4. For KD-70/110, take out the row of flake covers (B) by snapping one end up and pulling forward. For KD-50, remove the flake covers by unscrewing the two associated bolts.

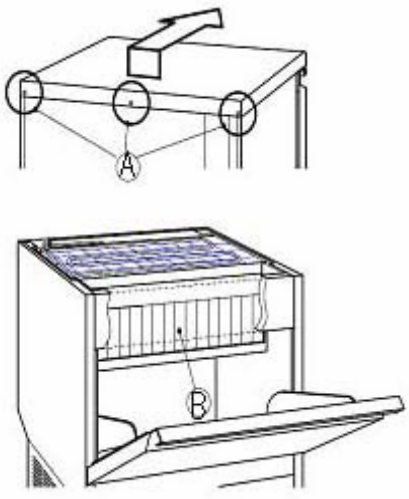

KD-70/110


Flake covers

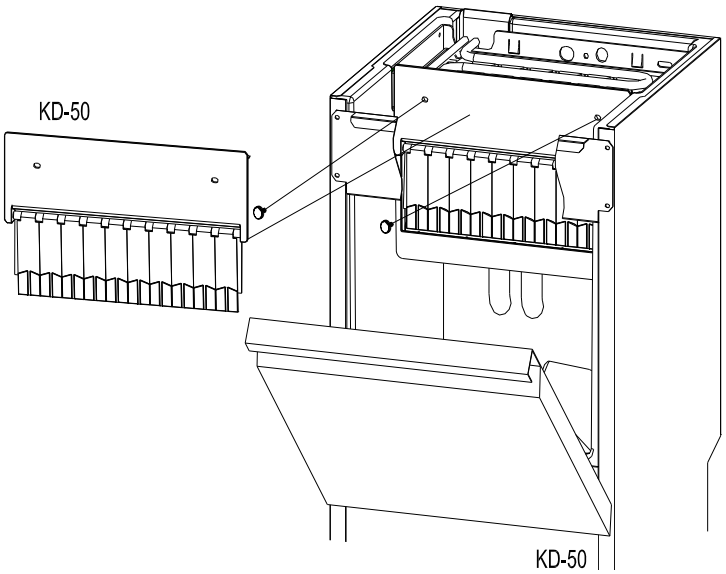

5. Remove the slideway from the water sump.

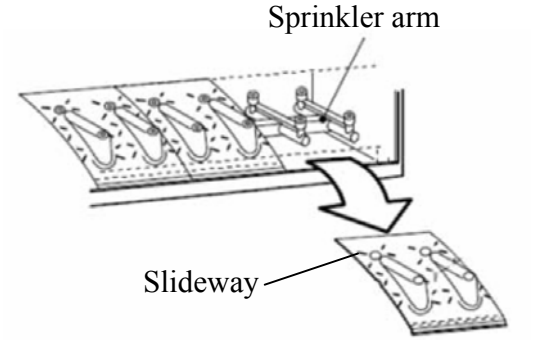

6. Find the sprinkler and raise it. Disconnect it from the water tube which is connected at the back of the sprinkler arm.

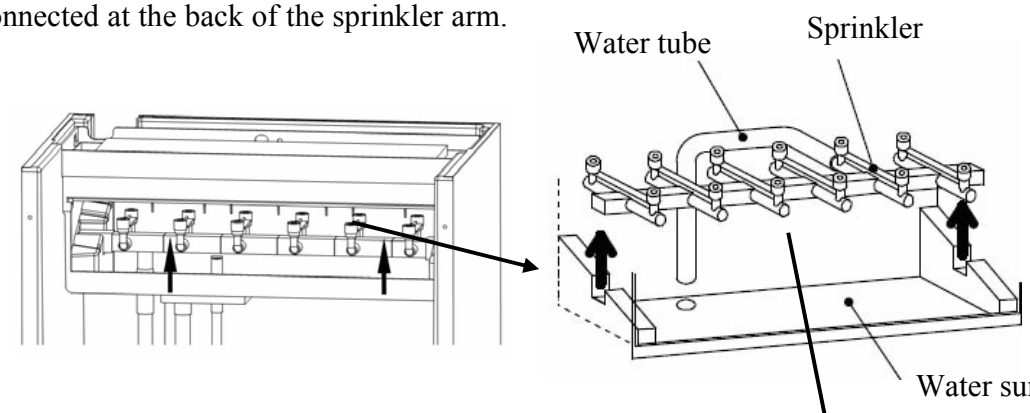

7. A de-scaling solution can be prepared in a plastic basin with Nu-Calgon Nickel-Safe Ice Machine Cleaner. Mix 4 ounces of the ice machine cleaner per gallon of warm water. Remove the sprinkler arm from the interior, unscrew the sprinkler nuts, separate the centrifuge parts from the nuts and pull the end plug out. Thoroughly clean the parts by soaking them in the basin filled with the de-scaling solution until they are free of any deposit; use a soft

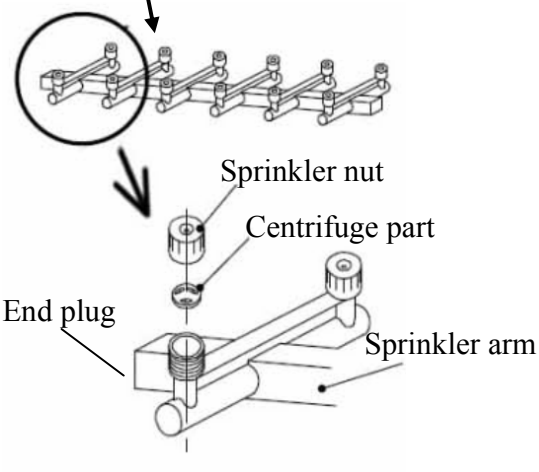

brush to remove any thick or stubborn residue and to help the dissolving action. Rinse under a stream of tap water.

8. Wipe down the interior of the water sump with the de-scaling solution and warm water. Rinse thoroughly with clear water.
9. Reassemble all the parts of the sprinkler, slideway and row of flake covers.
10. Perform steps 1, 3, 6, 7 and 8 of the Ice Making System Cleaning procedure below.

Ice Making System Cleaning

Minerals that are removed from water during the freezing cycle will eventually from a hard scaly deposit in the water system. Cleaning the system regularly helps remove the mineral scale buildup. How often you need to clean the system depends upon how hard your water is or how effective your filtration may be. With hard water of 15 to 20 grains/gal. (4 to 5 grains/liter), you may need to clean the system as often as every 6 months.

1. Turn off power to the ice maker. Keep the ice maker connected to the water supply and drainpipe.
2. Open the door and scoop out all of the ice cubes. Either discard them or save them in an ice chest or cooler.
3. Grasp the right and left sides of the front cover，raise it a little and pull forward to remove the front cover. Locate the control box.

NOTES: Do not use too much force, as the top side of the front cover can be inadvertently damaged by the lower corner of the door.
Use care in the area of the control box. Do not expose it to moisture.

4. Turn on the power to the ice maker. Pour 8 oz. of Nickel-Safe Ice Machine Cleaner solution into the water sump. Add 8 oz. of tap water. After about 5 minutes, press down the “Clean” button on the Control Box.
(See figures here and on page 24.) The machine will run the Automatic Clean Mode.

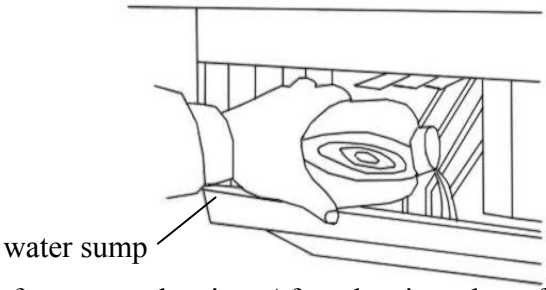

5. Allow 30 minutes for proper cleaning. After cleaning, shut off the power switch, and unscrew the bleeder plug on the rear of the unit. Drain off the waste water to some container, and then screw the bleeder plug tightly when the waste water is fully drained off.

⚠ WARNING

The ice machine cleaner contains acids.

DO NOT use or mix with any other solvent-based cleaner products.

Use rubber gloves to protect hands. Carefully read the material safety instructions on the container of the ice machine cleaner.

DISCARD the first batch of ice produced after cleaning.

6. Repeat steps 4 and 5 (without Ice Maker Cleaning Solution) to rinse the ice making system 3 times.

NOTE: The use of the Ice Maker Cleaner Solution in the water sump during the rinse is not needed.

7. Prepare a sanitizing solution made of 1 ounce of household bleach and 2 gallons of hot water (35℃ to 46℃). Remove the flake covers and slideway from the water sump and wipe the entire bin inside and out, covering the entire surface of the walls.

8. Fill a spray bottle with the sanitizing solution and spray all corners and edges, making sure to cover all surfaces with the solution. Soak the flake covers and slideway in the solution and put back in place after drying.

9. Allow the solution to be in contact for at least 3 minutes, then dry.

10. Repeat step 6 to rinse the ice making system one more time.

11. Reassemble the front cover.

12. Turn on the power again. The machine will return to the regular ice making mode. Discard the first batch of ice.

Control Box *(behind front cover)*

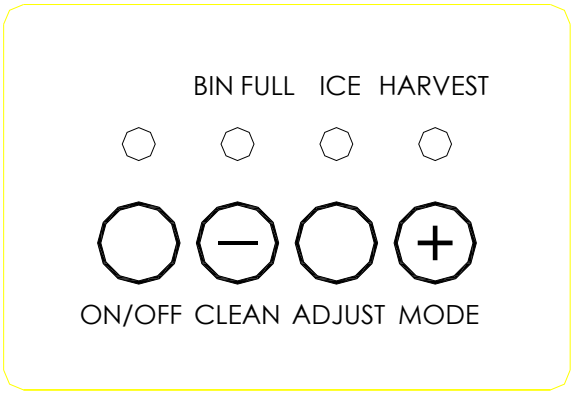

Descriptions of LEDs and buttons:

1. **Bin full (Red) LED:** Bin Full indicator light.
   When this LED is lit, the ice storage bin is full of ice or the ice-full sensor is covered with ice. The unit will stop working.When ice cubes are taken out of the ice storage bin, clearing the sensor, the red LED will keep flashing for 3 minutes. Then the unit will restart and return to the ice making mode.

2. **Ice Making (Green) LED:** Ice Making indicator light.
   When this LED is lit, the unit is working in the Ice Making mode controlled by a temperature probe on the evaporator. When the green LED is flashing, the unit is working in the Ice Making mode controlled by a fixed timer.

3. **Ice Harvest (Yellow) LED:** Ice Harvest indicator light.
   When this LED is lit, the unit is working in the Ice Harvest mode controlled by a temperature probe on the evaporator. When the yellow LED is flashing, the unit is working in the Ice Harvest mode controlled by a fixed timer.

4. **Clean button:** When this button is pressed, the unit enters the Cleaning mode. The green and yellow LEDs flash together. To stop the Cleaning mode, just press the button again.

5. **Mode button:** Mainly for service. When this button is pressed, unit can change from Ice Making mode to Ice Harvest mode, or vice versa. You can judge the mode from the status of the green and yellow LEDs.

6. **Adjust button:** Mainly for service. When it is pressed over 3 seconds, the unit will enter the Ice Size Adjustment mode. The mode can be judged from the status of the yellow LED.

Ice Size Adjustment Guide:

1.) Press and hold the "**Adjust**" button for at least 3 seconds. The unit will enter the Ice Size Adjustment mode. The "**ICE**" LED (green) will be blinking continuously during the ice size adjustment. Release the button when the LED blinks continuously to adjust the ice size

2.) While in the Ice Size Adjustment mode, press the "**Clean**" (-) button or the "**Mode**" (+) button

for the desired ice size.

Smaller ice setting:

By pressing the "Clean" (-) button, you can decrease the size of the ice cubes. The "BIN FULL" LED (red) will flash as you lower the ice size and will finally be blinking at the setting of smallest ice size.

Larger ice setting:

By pressing the "Mode" (+) button, you can increase the size of the ice cubes. The "HARVEST" LED (yellow) will flash as the larger size is set and will blink when the setting of largest ice size has been reached.

After 10 seconds without any operation, the unit will automatically memorize the current state and return to the previous mode.

NOTE:

- If during the ice size adjustment mode the "BIN FULL", "ICE" and "HARVEST" LEDS blink all at once, this indicates that the unit is in the regular (middle) setting of the ice size.
- When the machine is in the cleaning stage or ice full stage, the ice size adjustment mode cannot be accessed.

Avoid letting water contact the control box.

MAJOR FUNCTIONS

1. Completely automatic operating procedure.
2. When the ice storage bin is full of ice cubes, the machine stops working automatically and starts again after the cubes are removed.
3. The different colors of the LED display indicate various work modes.
4. Ice cube size is adjustable.
5. A sensitive probe and accurate timer enhance the performance of the ice maker.
6. Manual Clean mode to start or stop the ice making system cleaning.
7. Built-in compressor protection system.

TROUBLESHOOTING

Before Calling for Service

If the unit appears to be malfunctioning, read through the operation section of this manual first. If the problem persists, check the troubleshooting guide below and on the following page. The problem could be something very simple which can be solved without a service call.

Troubleshooting Guide

Problem	Possible Cause	Probable Correction
The machine doesn't operate.	The ice maker is unplugged.	Plug the ice maker in.
	The fuse is blown.	Replace fuse. If it happens again, call for service to check for a short circuit in the ice maker.
	The ice maker power switch is OFF.	Turn the ice maker power switch ON.
	The ice storage bin is full of ice.	Remove some ice; make sure the ice-full sensor is free of ice.
The water doesn't feed in after the ice maker starts.	The water supply tap is turned off.	Turn on the water supply tap.
	The water supply line is not connected properly.	Reconnect the water supply line.
Machine makes ice, but ice storage bin does not fill up with ice.	The bin should fill up and the machine shut off in 9-14 hours. If not, the condenser may be dirty.	Clean the condenser.
	The bin drain may be partially restricted.	Clean out the drain; check the installation.
	The airflow to the ice maker may be obstructed.	Check the installation.
	The ambient temperature and water temperature are high, or machine is near some heat source.	Check the installation.

Problem	Possible Cause	Probable Correction
Water is leaking from the unit.	A few water drops fall to the floor when you open the door to take out ice from ice storage bin.	Normal condensation on the door or some water together with ice. Take care when you take out ice.
	Water supply connection leaking.	Tighten fitting. See "Connecting the Water Line".
	Nut of water drain hole leaking.	Tighten the nut.
	Drain hose connection leaking.	Tighten fitting. See "Connecting the Drain".
Cubes are partially formed or are white at the bottom.	Not enough water in the water sump.	Check if the water supply pressure is below 20 psig.
		Check water supply; filter may be restricted.
		Check for a water leak at the water sump.
		Check if water inlet valve is restricted.
The ice cubes are incomplete when being dumped.	The sprinkler is blocked.	Clean it; see "Interior Cleaning".
Noise during operation	The feet are not leveled and locked.	Level and lock the feet. See "Leveling the Ice Maker".
	Certain sounds are normal.	See "Normal Sounds".
The ice maker stops suddenly while making ice.	The electricity is off.	Reconnect the power supply line.
	The room temperature is out of the stated range.	Cut off the electricity; let the ice maker stop working till the temperature returns within the stated range.
	The ventilation louvers are covered.	Remove the obstruction.
The body of the ice maker is electrified.	The grounding line isn't in the socket.	Use a socket meeting the required electrical standard.
Scale occurs frequently inside the machine.	The hardness of the water is too high.	Use a water-softening device installed in front of the water inlet valve.