Chewblet® ice machine

accessories



Shown with Horizon Elite™ ice machine

Ice machine stand

Stand for Horizon Elite™ and Maestro Plus™ ice machines with RIDE® remote ice delivery equipment to elevate ice machines 6.80" (17.3 cm) to 8.30" (21.1 cm) above the floor.

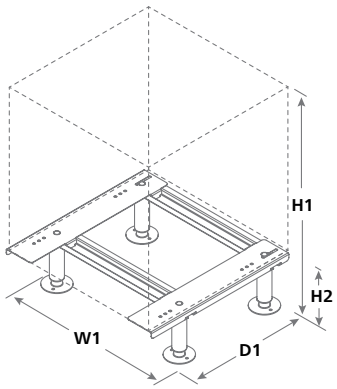

Model	Configuration: (A/W) – air- or water-cooled (R/N) – with or without remote condenser	Item number
414	self-contained (A)	**AFR400STND**
425	self-contained (A/W)	
710	self-contained (A)	**00997080**
1010, 1410	remote (R/N)	
1412	remote (R/K)	
1810, 2110	remote (R/N)	
1010, 1410	self-contained (A/W)	**01085463**
1012, 1412	self-contained (W)	

Model	W1	D1	H1	H2
414 (A) 425 (A/W)	18.70" (47.5 cm)	22.70" (57.7 cm)[1]	23.80" (60.5 cm)	6.80" (17.3 cm)
710 A	22.70" (57.7 cm)	24.50" (62.2 cm)	28.00" (71.1 cm)	6.80" (17.3 cm)
1010/1410 (A/W) 1012/1412 (W)	29.15" (74.0 cm)	23.25" (59.1 cm)	29.30" (74.4 cm)	6.80" (17.3 cm)
1010/1410 (R/N) 1412 (R/K)	22.70" (57.7 cm)	22.50" (57.2 cm)	28.00" (71.1 cm)	6.80" (17.3 cm)
1810/2110 (R/N)	22.70" (57.7 cm)	23.70" (60.2 cm)	29.30" (74.4 cm)	6.80" (17.3 cm)

[1] Depth includes 1.90" (4.83 cm) shroud and gasket to mate condenser to interior of cabinet for adequate air intake.



Shown with Horizon Elite ice machine

Wall mount bracket

Wall mount bracket for ice machines with RIDE remote ice delivery equipment conserves floor space. Allows ice machine to be located away from customer areas.

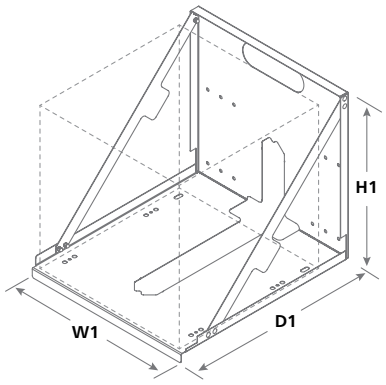

Model	Configuration: (A/W) – air- or water-cooled (R/N) – with or without remote condenser	Item number
414, 425	self-contained (A/W)	**AFWALLMTBRKT**
710	self-contained (A)	**00997098**
1010, 1410	remote (R/N)	
1412	remote (R/K)	
1810, 2110	remote (R/N)	
1010, 1410	self-contained (A/W)	**01085455**
1012, 1412	self-contained (W)	

Model	W1	D1	H1[1]
414/425[2] (A/W)	26.20" (66.5 cm)	20.20" (51.3 cm)	19.40" (49.3 cm)
1010/1410 (A/W) 1012/1412 (W)	30.50" (77.5 cm)	25.50" (64.8 cm)	23.50" (59.7 cm)
710 (A) 1010/1410/1810/2110 (R/N) 1412 (R/K)	23.00" (58.4 cm)	25.50" (64.8 cm)	22.50" (57.2 cm)

[1] Height of bracket and ice machine.
[2] 414 and 425 (Maestro Plus) oriented with utilities to left side on wall mount bracket.

801 Church Lane | Easton, PA 18040, USA
1.800.523.9361 | 1.610.252.7301 | follettice.com

FOLLETT®



Slide-out stand

Slide-out accessory for Maestro Plus ice machines with RIDE technology allows easy access for service and cleaning without disconnecting utilities. Includes front leg to support ice machine.

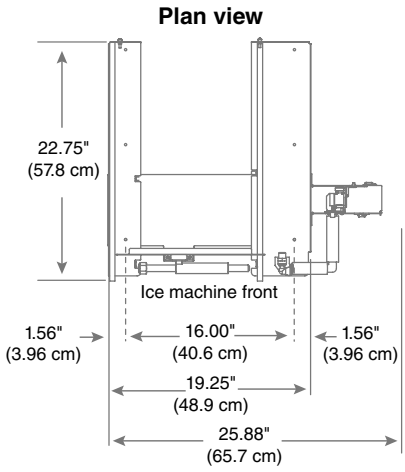

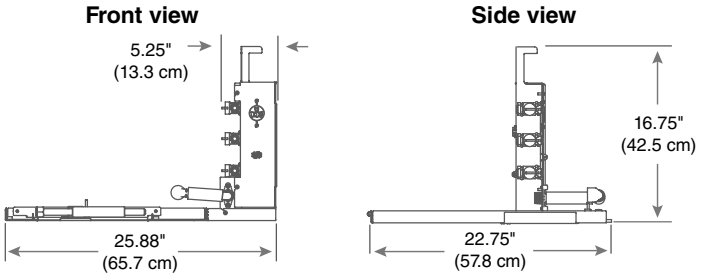

Model	Item number
MCD425AVS, MCD425WVS, MCD425AHS, MCD425WHS	**01068477**[1]
MCE414AHS, MCE414ABS, MCE414AVS	**01336494**

[1] Compatible with AFR400STND accessory.



Line set

Line set for connecting Horizon Elite evaporator units to their remote condensing unit. Lines are cleaned and capped without a pre-charge of refrigerant. Connections must be brazed (no quick connect).

Model	Line size	Length	Item number
1010 and 1410 remote (R/N)	3/8" liquid, 5/8" suction (insulated)	35 ft (11 m)	**00193227**
1412 (R/K) 1810 and 2110 remote (R/N)	3/8" liquid, 7/8" suction (insulated)	35 ft (11 m)	**00977785**
1010 and 1410 remote (R/N)	3/8" liquid, 5/8" suction (insulated)	50 ft (15 m)	**01262328**



Timer

Timer to control one or two Horizon Elite ice machines.

Model	Item number
710, 1010, 1012, 1410, 1412, 1810, 2110	**00967265**

HORIZON ELITE and MAESTRO PLUS are trademarks of Follett Products, LLC.
CHEWBLET, FOLLETT and RIDE are registered trademarks of Follett Products, LLC, registered in the US.
Follett reserves the right to change specifications at any time without obligation. Certifications may vary depending on country of origin.

3311-20240508 | © Follett Products, LLC

801 Church Lane | Easton, PA 18040, USA
1.800.523.9361 | 1.610.252.7301 | follettice.com