5070

Worktop Refrigerators

Model #: MEWR-27-A, MEWR-48-A MEWR-60-A, MEWR-72-A

Product Details

Exterior:

- 430 Stainless Steel
- Self-closing doors
- 90° stay-open feature
- Magnetic door gasket(s)
- Recessed handles for easy opening/cleaning
- Digital controls and LED temperature display
- Security lock with key
- (4) 4" casters - 2 locking, 2 non-locking

Interior:

- Aluminum
- Adjustable plastic coated steel shelves (1 per section; 90 lbs load capacity each)
- Auto-defrost system
- Holding temperature: 33°F to 41°F

Not suitable for installation in non-commercial or residential applications.

Specifications

Model	External Dimensions	Internal Dimensions	NET. Volume	Holding Temperature Range	Doors/ Shelves	Refrigerant Type	Electrical	AMP/ WATTS
MEWR-27-A	27.7" x 30.5" x 37.5"	24.75" x 21" x 27"	7.3 Cu Ft	33°F to 41°F	1 / 1	R600A	115V/60Hz/1Ph	-
MEWR-48-A	48.5" x 30.5" x 37.5"	44.25" x 21" x 27"	12.9 Cu Ft	33°F to 41°F	2 / 2	R290	115V/60Hz/1Ph	-
MEWR-60-A	60.2" x 30.5" x 37.5"	56" x 21" x 27"	16.3 Cu Ft	33°F to 41°F	2 / 2	R290	115V/60Hz/1Ph	-
MEWR-72-A	71.7" x 30.5" x 37.5"	67.5" x 19.75" x 23.5"	19.6 Cu Ft	33°F to 41°F	2 / 2	R290	115V/60Hz/1Ph	-

5070 reserves the right to make changes to the design or specifications without prior notice.

APR2524

5070

Worktop Refrigerators

Model #: MEWR-27-A, MEWR-48-A
MEWR-60-A, MEWR-72-A

FRONT VIEW

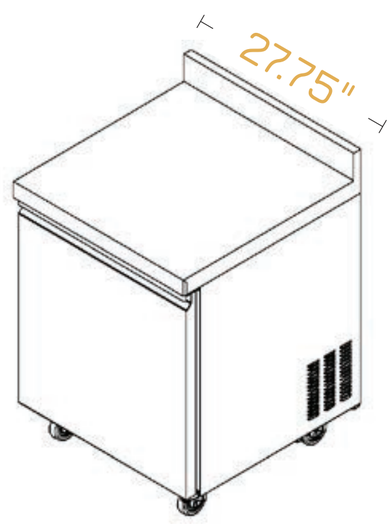

MEWR-27-A

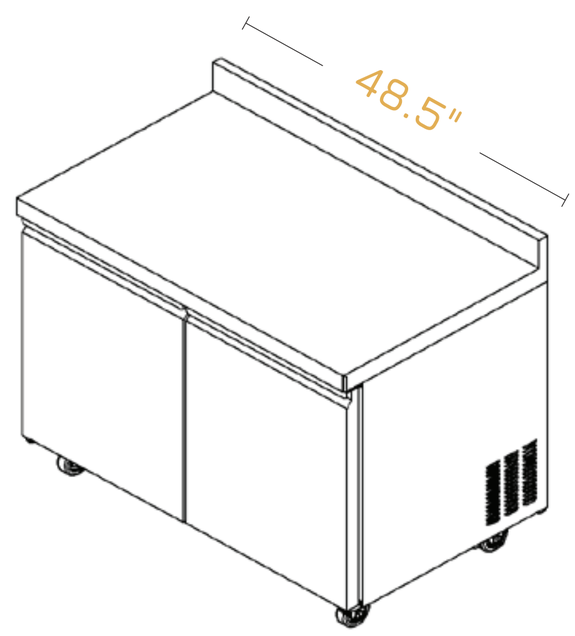

MEWR-48-A

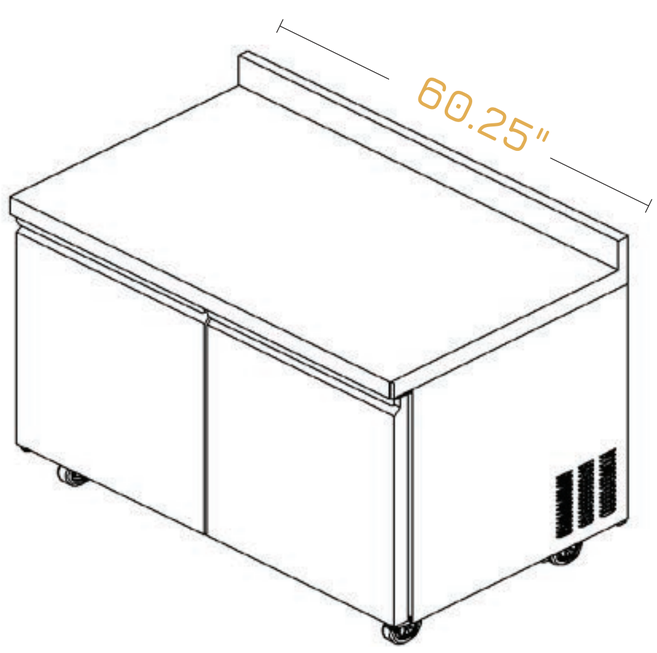

MEWR-60-A

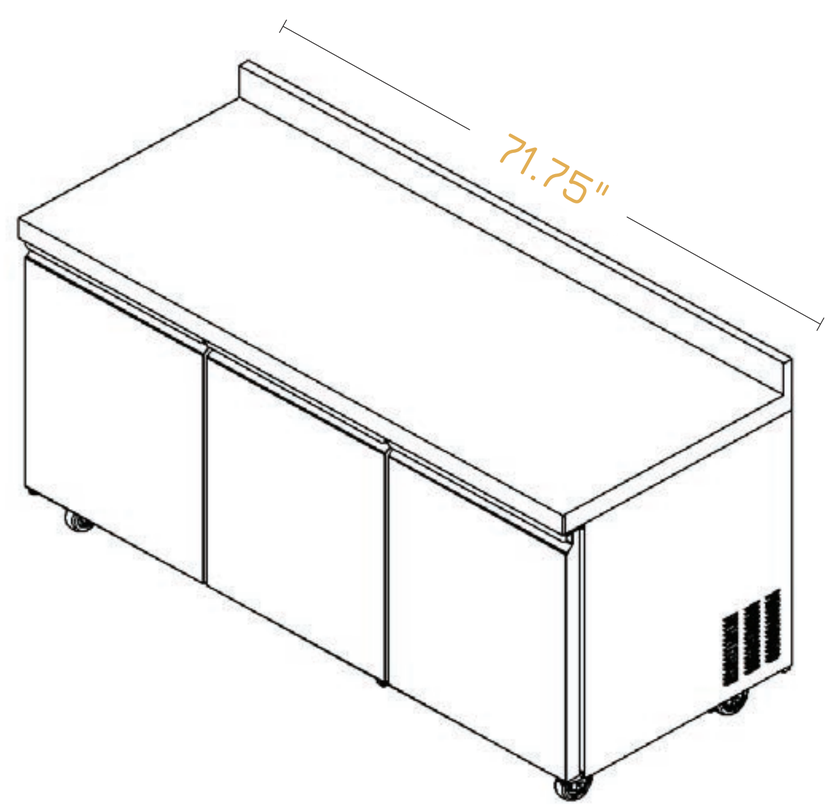

MEWR-72-A

5070 reserves the right to make changes to the design or specifications without prior notice.

APR2524