# Salvajor Scrap Collector and Pot/Pan Collector

## PARTS BREAKDOWN for Models S914 and P914

*For Serial Numbers starting at 29766 for Model S914 & 27668 for Model P914*

## System Components

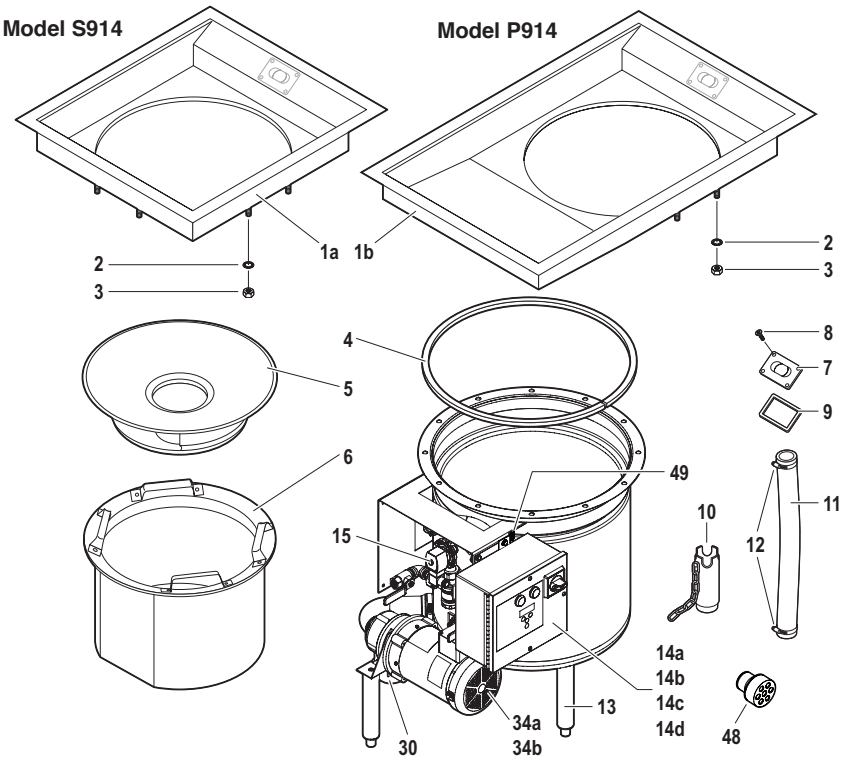


## Item #15

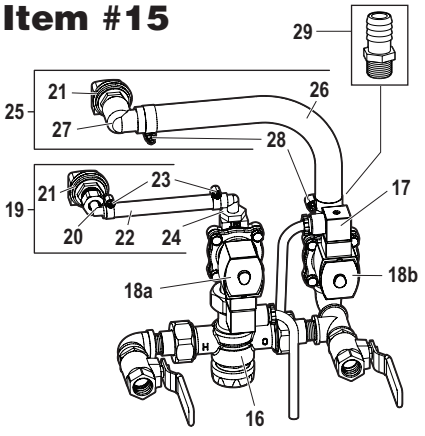


## Item #49

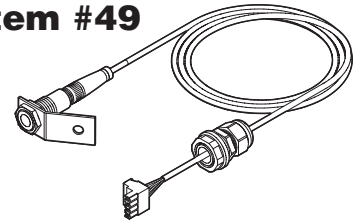

## Item #30

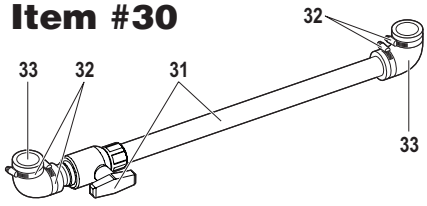


## Item #34a
## Item #34b *(shown)*

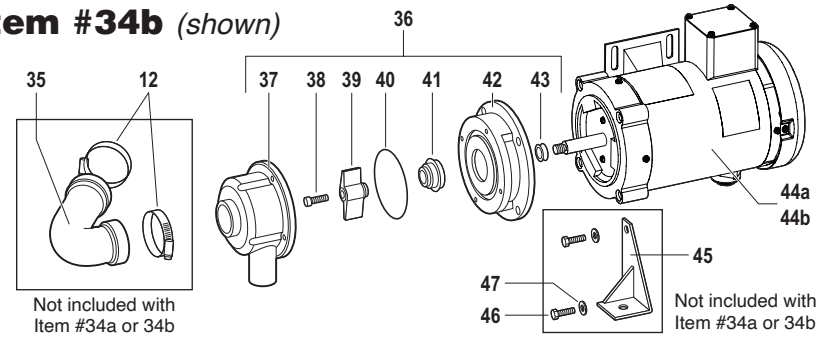


Not included with Item #34a or 34b

Not included with Item #34a or 34b

| ITEM | PART NO. | DESCRIPTION |
|---|---|---|
| 1a | 980167 | S914 Top Assembly |
| 1b | 980168 | P914 Top Assembly |
| 2 | ILW14SS | Internal Lockwasher 1/4" |
| 3 | 1420NSS | 1/4-20 Hex Nut SS |
| 4 | 996058 | Top Gasket |
| 5 | 992011 | Scrap Basin |
| 6 | 992013 | Scrap Basket |
| 7 | 980146 | Gusher Plate |
| 8 | 997066 | 10-32 x 5/8 Flat Head Phillips SS |
| 9 | 996057 | Gusher Plate Gasket |
| 10 | 988006 | Overflow Pipe Assembly |
| 11 | 986055 | Recirculation Hose |
| 12 | M32 | Hose Clamp (sold separately) |
| 13 | 914LESS | Stainless Steel Leg |
| 14a | SS334 | Control Panel 115V 1PH |
| 14b | SS335 | Control Panel 208-230V 1PH |
| 14c | SS337 | Control Panel 208-230V 3PH |
| 14d | SS339 | Control Panel 460V 3ph |
| 15 | 980192 | Water Harness 24V Assy (includes 16-29) |
| 16 | 998124 | Water Harness Blender (only) |
| 17 | 994395 | Din Cord Pigtail |
| 18a | AS8242DIN | Solenoid Valve Assy 24V (2 GPM Flow Control) |
| 18b | AS824DIN | Solenoid Valve Assy 24V (Unrestricted Quick Fill) |
| 19 | 980159 | Nozzle Assembly SC/PC/TC (includes 20-24) |
| 20 | 998113 | 3/8" Nylon Elbow |
| 21 | 2906 | Fixed Nozzle |
| 22 | 998022 | 3/8" Braided Tubing |
| 23 | 997001 | Hose Clamp |
| 24 | 998046 | Adaptor 3/8" X 1/2" 90 Deg Hose |
| 25 | 980197 | Quick Fill Nozzle Assembly (includes 21, 26-28) |
| 26 | 988040 | 3/4" Braided Tubing |
| 27 | 998136 | Female 1/2" NPT 90deg 3/4" Barb |
| 28 | 997183 | 1-1/16" Hose Clamp |
| 29 | 998132 | Adaptor 3/4" Barb x 1/2" NPT |
| 30 | 980164 | Pump Recirculation Pipe Assy (includes 31-33) |
| 31 | 988027 | Valve Assembly |
| 32 | S24 | Hose Clamp |
| 33 | S914PDE | Rubber Elbow Discharge |
| 34a | 980076 | Pump and Motor Assembly 1PH (includes 37-44) |
| 34b | 980077 | Pump and Motor Assembly 3PH (includes 37-44) |
| 35 | 996034 | Elbow 125 Degree Rubber (sold separately) |
| 36 | 980074 | Pump Assembly (includes 37-43) |
| 37 | 988010 | Pump Housing |
| 38 | 997089 | Cap Screw (not used on 1-phase) |
| 39 | 996027 | Impeller |
| 40 | 996028 | O-Ring |
| 41 | ECK511 | Seal Kit |
| 42 | 988009 | Pump Base |
| 43 | 996030 | V-Ring |
| 44a | 991060 | Pump Motor 1PH |
| 44b | 991061 | Pump Motor 3PH (shown) |
| 45 | 980157 | Leg Bracket (sold separately) |
| 46 | 997061 | Screw 3/8" (sold separately) |
| 47 | 38L | Lockwasher (sold separately) |
| 48 | 980110 | Pump Intake Screen |
| 49 | 980606 | Sensor Kit for SS33 |

**U.S. Pat. No. 7,815,134**

# Salvajor Model SS33

## Automatic Start/Stop with Line Disconnect

### PRE-WIRED CONTROL PANEL PARTS BREAKDOWN

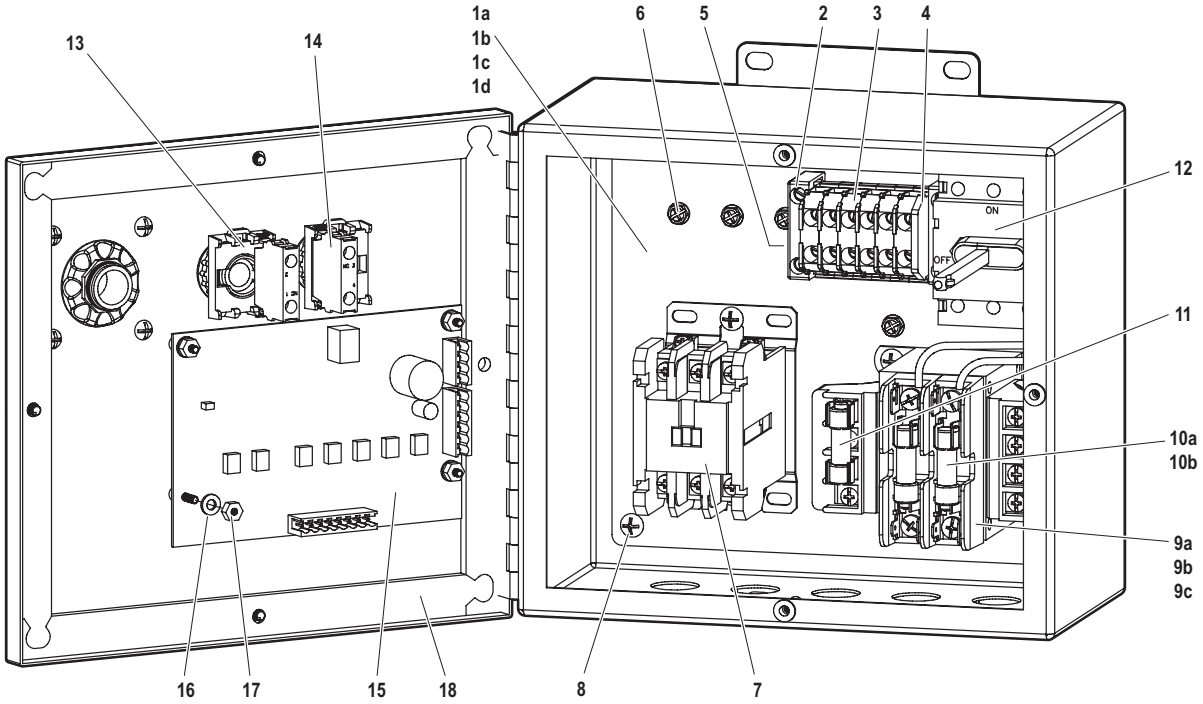


| SS33 Item Numbers | | |
|---|---|---|
| VOLTAGE | PHASE | ITEM NO. |
| 115 | 1 | SS334 |
| 208 *or* 230 | 1 | SS335 |
| 208 *or* 230 | 3 | SS337 |
| 460 | 3 | SS339 |

| ITEM | PART NO. | DESCRIPTION |
|---|---|---|
| 1a | SS334IP | SS33 Inner Panel 115V 1PH |
| 1b | SS335IP | SS33 Inner Panel 208V 1PH |
| 1c | SS337IP | SS33 Inner Panel 208-230V 3PH |
| 1d | SS339IP | SS33 Inner Panel 460V 1PH |
| 2 | 994294 | End Clamp |
| 3 | 994292 | Terminal Block |
| 4 | 994293 | End Barrier |
| 5 | 994295 | Din Rail Mounting Track |
| 6 | SCR1032 | Ground Screw 10-32 |
| 7 | 994174 | Contactor 24V |
| 8 | 997093 | Screw 10-32 X 3/8" |
| 9a | 994116A | Transformer Assembly 115V |
| 9b | 994115A | Transformer Assembly 208-230V |
| 9c | 994115B | Transformer Assembly 460V |
| 10a | 994095 | Fuse 1 AMP |
| 10b | 994122 | Fuse .5 AMP |
| 11 | 994101 | Fuse 2 AMP |
| 12 | 980209 | Line Disconnect Assembly (Includes 12a) |
| 12a | 984016 | Line Disconnect (Handle Only) |
| 13 | ABD200A | Button Stop |
| 14 | ABD100B | Button Start |
| 15 | 994392 | Solid State Control Panel |
| 16 | 997161 | Flat Washer 6-32 |
| 17 | 997160 | Hex Nut 6-32 |
| 18 | 910GA | Gasket Assembly 9 X 10 Box |
| 19 | 997032 | Screw 10-32 X 5/8" |
| 20a | 999235 | Control Overlay |
| 20b | 999258 | Control Overlay |

### 10" x 9" Box Assembly

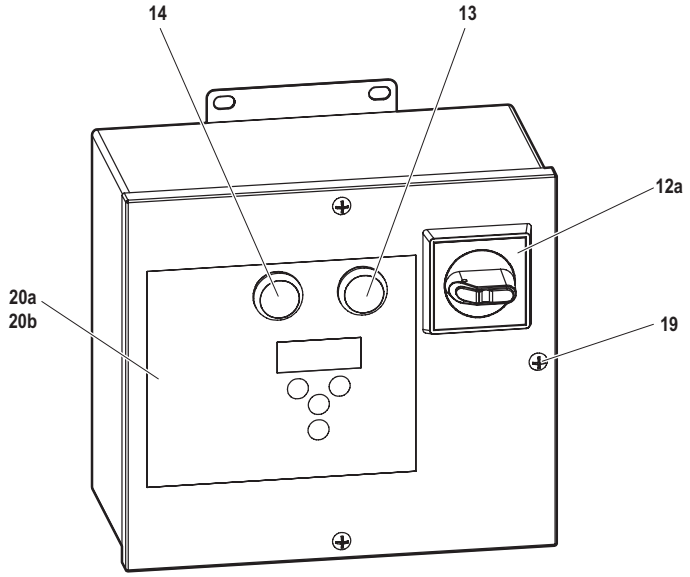



SALVAJOR

4530 East 75th Terrace Kansas City, MO 64132-2081, USA
Service: 1.888.725.8256 | Fax: 1.800.832.9373
service@salvajor.com | **www.salvajor.com**



Printed in USA
Form No. TC/COL 26606- (09-24)