SALVAJOR® Scrap Collector™

Job: _____ Item No.: _____

Model S914



HYDROLOGIC®
WATER & ENERGY SAVING TECHNOLOGY

Job: _____ Item No.: _____

Model P914



HYDROLOGIC®
WATER & ENERGY SAVING TECHNOLOGY

A Scrapping, Pre-Flushing and Food Waste Collecting System

- Standard Scrap Basin, Model S914
- Pot/Pan Scrap Basin, Model P914

Widely accepted in areas that restrict the use of food waste disposers.

An Economical Pulper Alternative, the Collector washes soluble food waste harmlessly through the sewer, reducing bulk food waste by as much as 50% and weight by as much as 80%.

Recirculated Water used for pre-flushing typically reduces water and sewer costs dramatically. The Collector consumes only 2 gallons of new water per minute while the pre-flushing water plume recirculates at a 30-gallon rate.

Scrapping Speed is more than doubled compared to an overhead pre-rinse since the worker's hands are free for scrapping. The Collector lets you keep up with small to medium size conveyor dishmachines.

Problem Dishes, Trays and Cookware with dried or baked-on food need much less hand work. They can be soaked in the Collector basin while scrapping continues on other dishes.

HydroLogic Control Panel saves water and energy. Includes patented operator sensing technology with two water saving modes.

U.S. Pat. No. 7,815,134

TYPICAL INSTALLATIONS

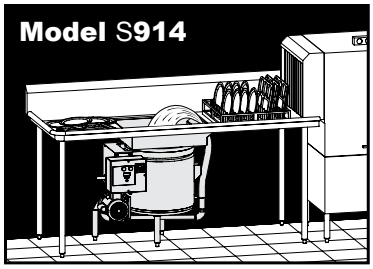

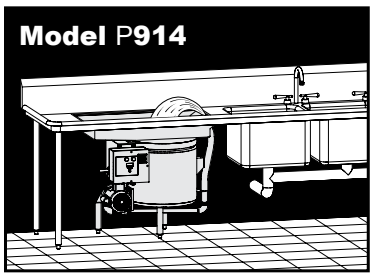

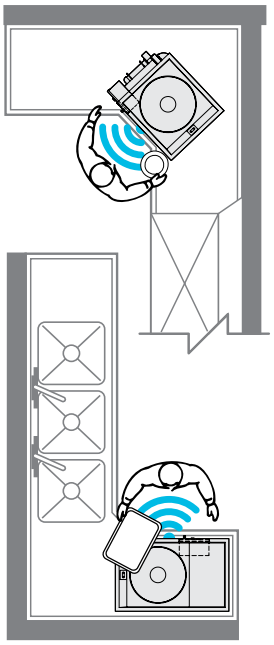

Scrap Collector™ Model S914
Pot/Pan Scrap Collector™ Model P914

Model S914

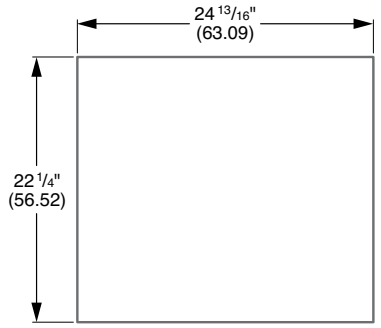

TABLE CUTOUT DETAIL

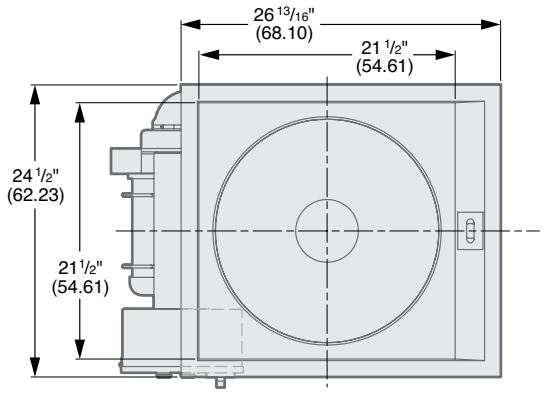

TOP VIEW

Model P914

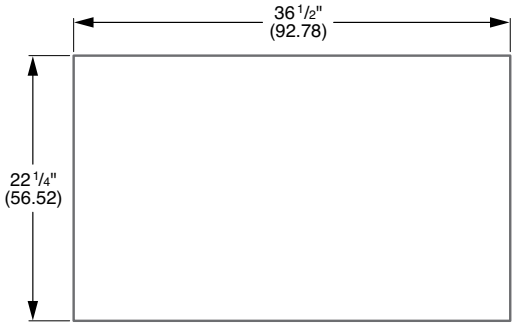

TABLE CUTOUT DETAIL

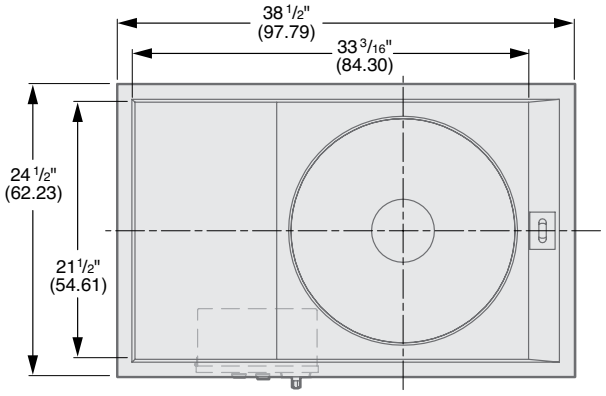

TOP VIEW

UTILITY CONNECTION

- Incoming electrical connection → factory wired control panel
- Incoming hot/cold water connection → factory plumbed water harness
- Drain connection → 2" NPT

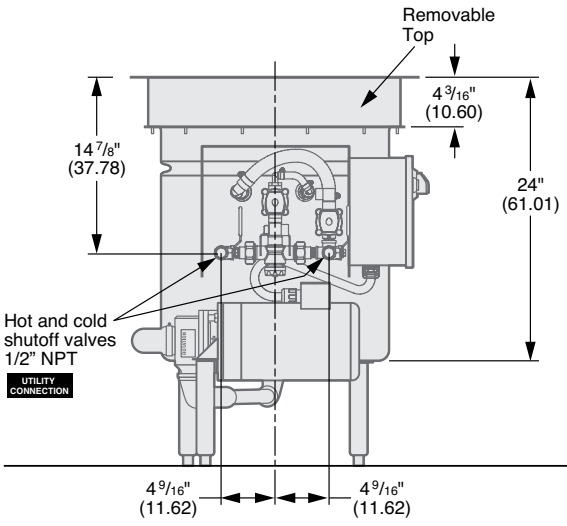

LEFT SIDE VIEW

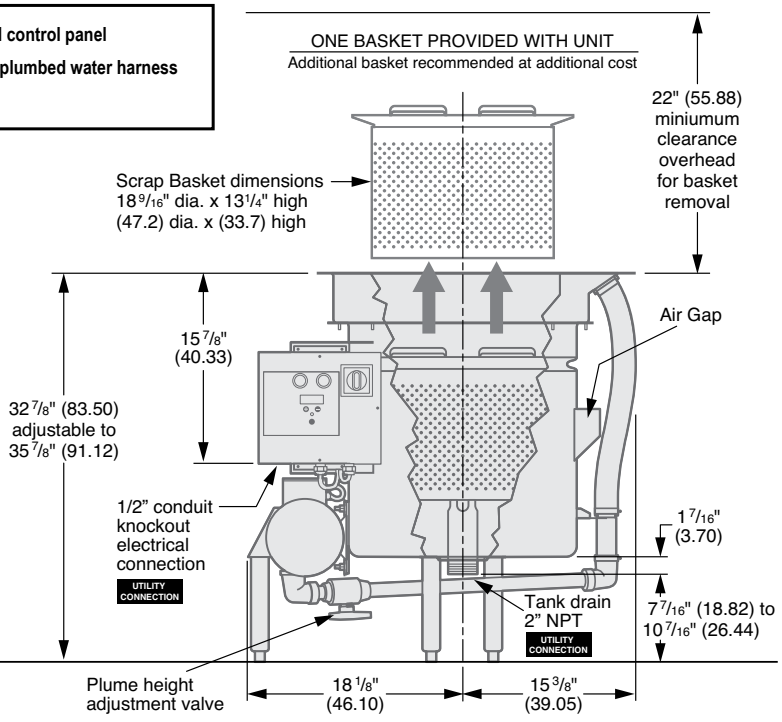

FRONT VIEW

Model S914 shown - P914 similar

NOTE: Dimensions in parenthesis are in centimeters

Scrap Collector™ Model S914
Pot/Pan Scrap Collector™ Model P914

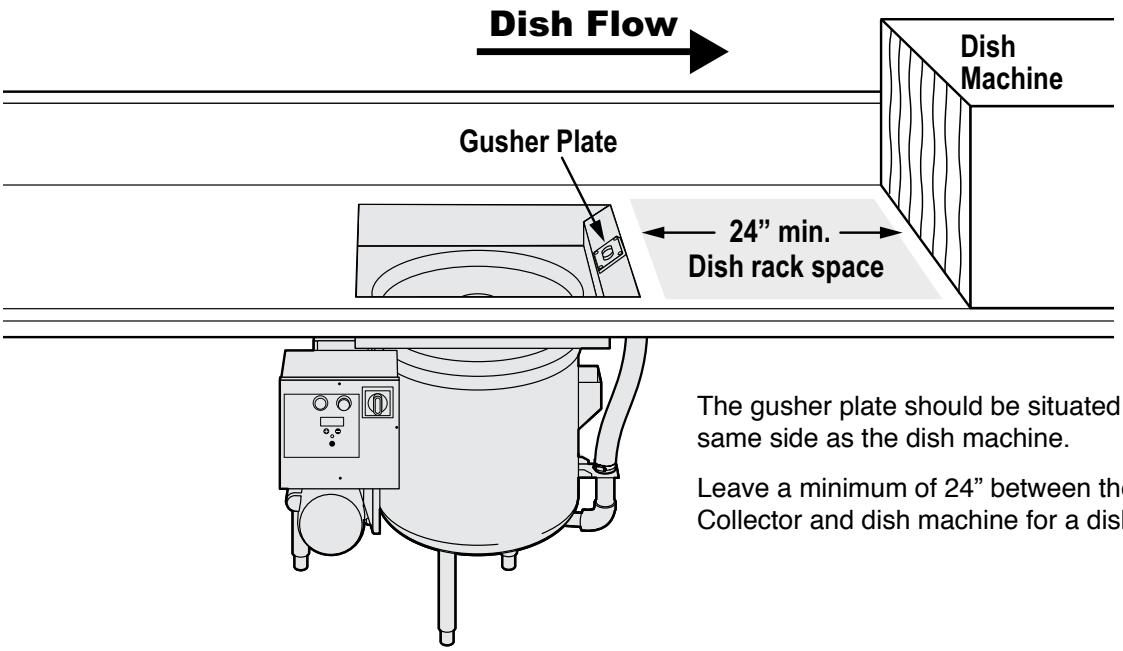

The gusher plate should be situated on the same side as the dish machine.

Leave a minimum of 24" between the Collector and dish machine for a dish rack.

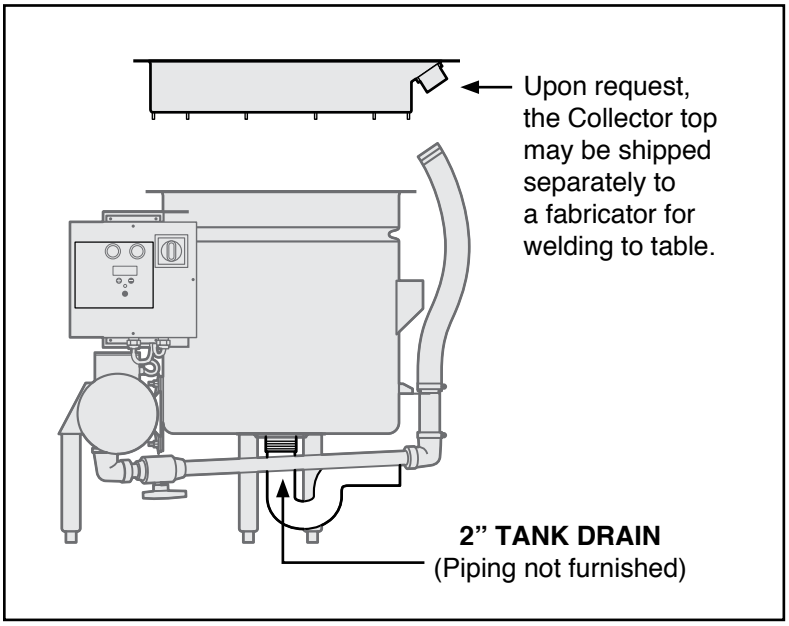

ALL CONNECTIONS ARE TO BE MADE BY QUALIFIED PERSONNEL WHO WILL OBSERVE ALL LOCAL AND NATIONAL CODES.

Model S914 shown - P914 similar

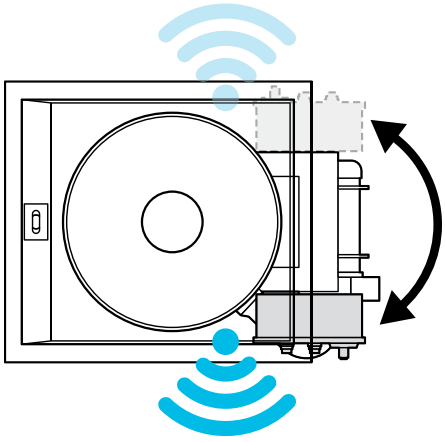

The control and operator sensor can be mounted on either side of the Collector using existing fasteners, mounting holes and wiring to accommodate dish flow to the left or dish flow to the right. It is not necessary to disconnect factory-installed wiring.

The control and sensor should always face the operator.

If necessary, the control can be mounted remotely. Additional field wiring and hardware will be necessary. Contact service for installation advice.

Scrap Collector™

Model S914 & Model P914 Specifications

CONSTRUCTION

- Tank - 2 Piece Stainless Steel
- Adjustable Legs - Stainless Steel
- Control Panel - Stainless Steel
- Salvage Basin - High Impact Polymer
- Scrap Basket - High Impact Polymer

ELECTRICAL

- Pre-wired NEMA 4 Control Panel
- Patented Operator Sensor
- Watertight Conduit/Fittings
- Separate Component Grounding
- Thermally Protected Motor
- Safety Line Disconnect
- 24 Volt Safety Circuitry

PLUMBING

- Corrosion Resistant Components
- Automatic Water Blender
- 24 Volt Solenoid Valves
- Unions
- Check Valves
- Incoming Water Valves
- Non-clogging Pump Design
- Pump Intake Screen
- Back Flow Prevention Device

ACCESSORIES

- ☐ Remote Start-Stop
- ☐ Remote Mounting Bracket
- ☐ Correctional Package
- ☐ Control Mounting Bracket
- ☐ Additional Scrap Basket

VOLTAGES AVAILABLE

(SPECIFY EXACT OPERATING VOLTAGE)

☐ 115V ☐ 208V ☐ 230V, 60 Cycle, 1 Phase

☐ 208V ☐ 230V ☐ 460V, 60 Cycle, 3 Phase

Pump Motor 3/4 HP

FULL LOAD AMPS

(SPECIFY EXACT OPERATING VOLTAGE)

1 PHASE			3 PHASE		
115V	208V	230V	208V	230V	460V
11	5.5	5.5	3.2	3	1.5

UTILITIES REQUIRED

1. Electric service
2. 3/4” hot and cold water supply and reduce to 1/2” at connection.
3. 2” tank drain.

(Specifications subject to change without notice.)

SAMPLE SPECIFICATIONS

Unit shall be a Scrap Collector (or Pot/Pan Scrap Collector) scrapping, pre-flushing and food waste collecting system with recirculating water as manufactured by Salvajor.

Model S**914** (or P**914**), ____Volts, 60Hz, ___Phase.

Furnished with a pre-wired HydroLogic control panel, sensor and stainless steel NEMA 4 watertight enclosure.

U.S. Pat. No. 7,815,134

SALVAJOR®

Manufacturers of Commercial Food Waste Solutions - *Since 1944*

4530 East 75th Terrace Kansas City, MO 64132-2081, USA
816.363.1030 | Toll Free: 1.800.725.8256 | Service: 1.888.725.8256 | Fax: 1.800.832.9373
sales@salvajor.com | service@salvajor.com | **www.salvajor.com**

Printed in USA
Form No. S&P914 (05-18)