Scrap Collectors™ Model S914 & P914

Scrapping, Pre-flushing and Food Waste Collecting Systems

Installation & Operating INSTRUCTIONS

Scrap Collector
Model S914



Pot/Pan Scrap Collector
Model P914



ALL INSTALLATIONS SHOULD BE MADE IN ACCORDANCE WITH LOCAL AND NATIONAL PLUMBING AND ELECTRICAL CODES.

Sensor technology protected by
U.S. Pat. No. 7,815,134

2	System Components
3	Fabricator Instructions & Installation
4	Plumbing & Electrical
5	Operating Instructions
6	Troubleshooting & How it Works
7	Warranty
8	General Terms and Conditions of Sale

FOR PRODUCT/WARRANTY REGISTRATION

- Go to www.salvajor.com
- Click on SUPPORT at the top of homepage
- Click on PRODUCT REGISTRATION

SALVAJOR® Manufacturers of Commercial Food Waste Solutions - *Since 1944*

4530 East 75th Terrace Kansas City, MO 64132-2081, USA
Toll Free: 1.888.725.8256 | Fax: 1.800.832.9373
service@salvajor.com | **www.salvajor.com**

System Components

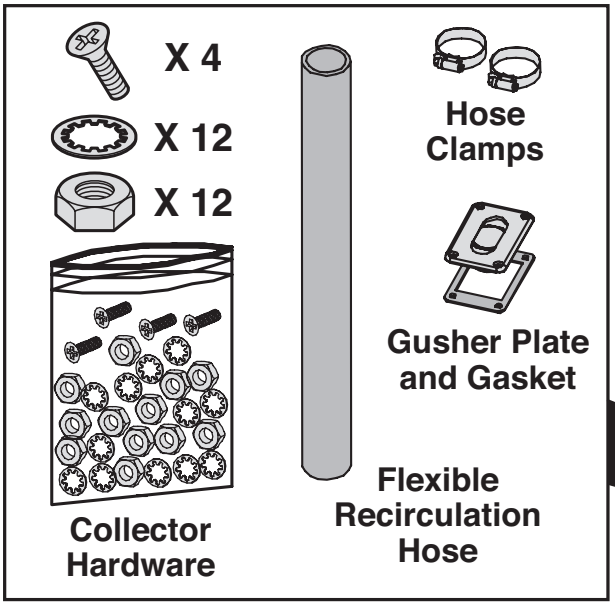

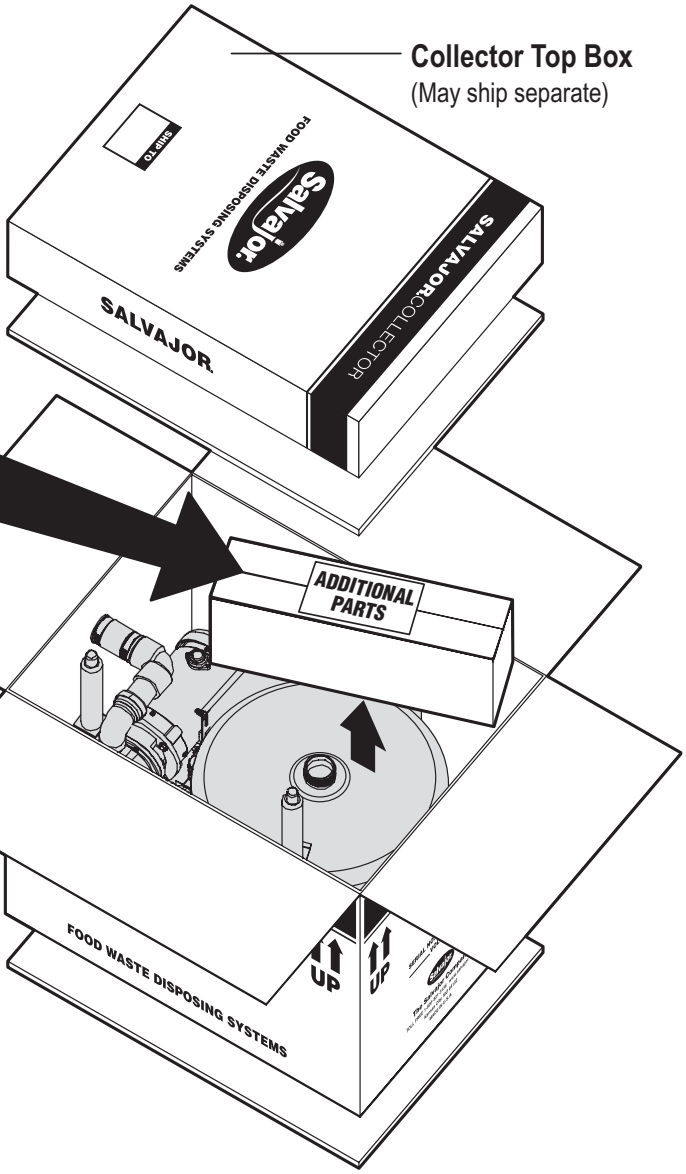

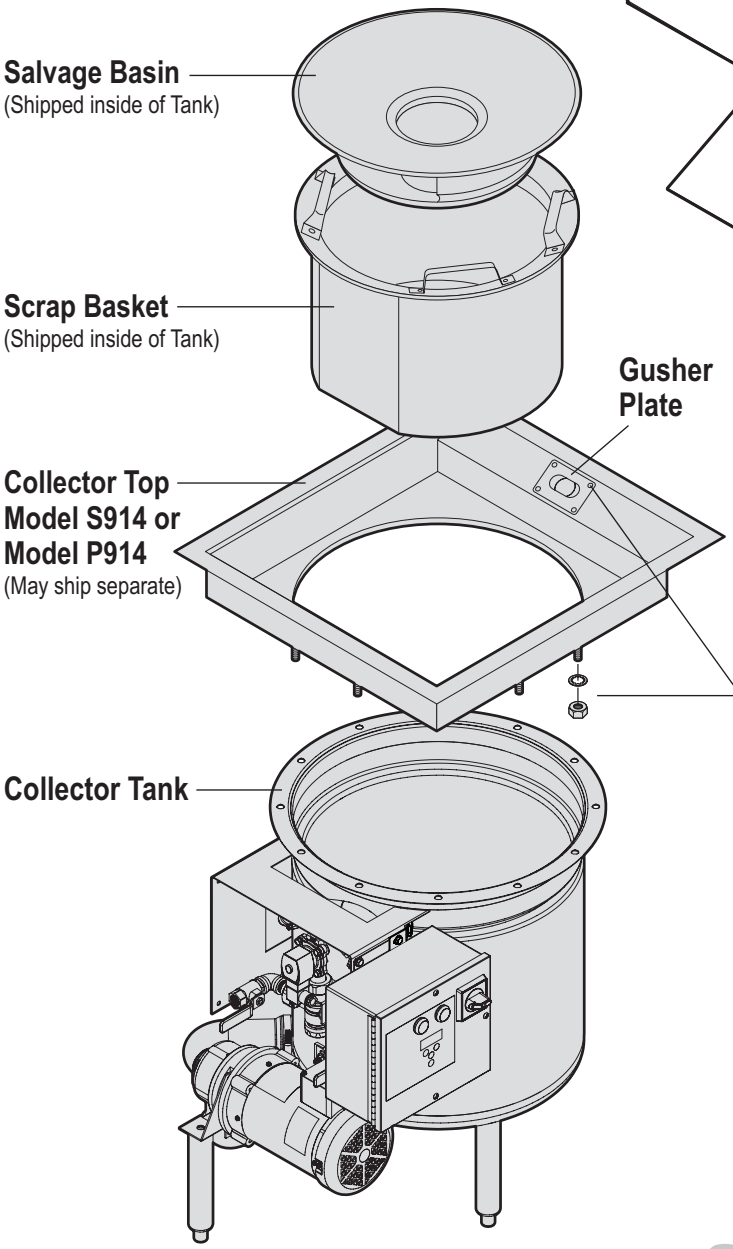

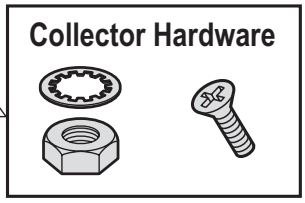

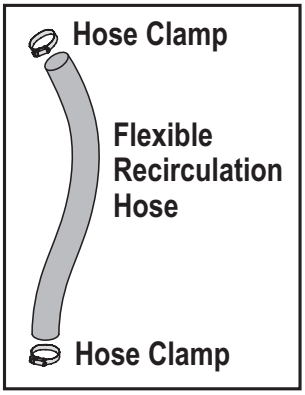

Fabricator Instructions

Upon request, the Collector top may be shipped separately to a fabricator for welding to table.

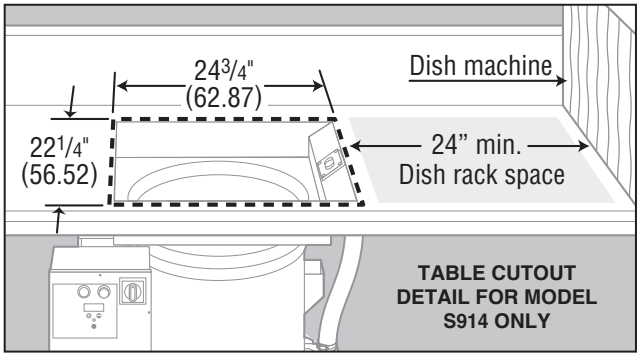

OR

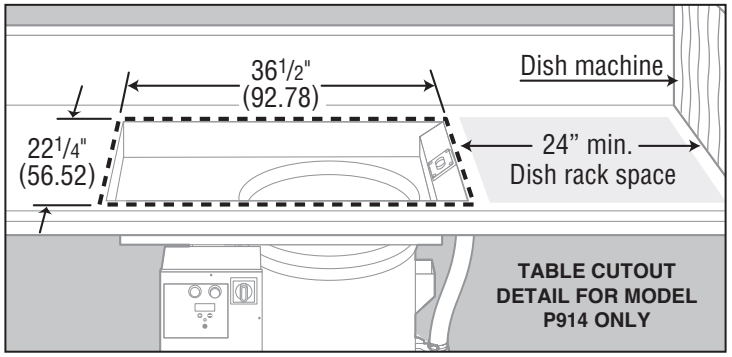

Use the above dimensions for the table cut out. Place the Scrap Collector (S914) top or the Pot/Pan Scrap Collector (P914) top to the underside of the table for welding. ***Attention:*** **When attaching the Scrap Collector or Pot/Pan Scrap Collector top to the table, make sure the top is mounted in the table with the recirculated water opening (water plume) on the same side as the dish machine. Leave a minimum of 24 inches between the Collector and the loading end of the dish machine to allow space for the dish rack.**

Installation

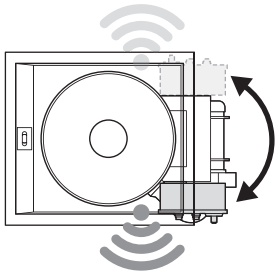

Before installation, it may be necessary to move the control and sensor from the back to the front of the Collector depending on orientation of the top in the table. The control and sensor should always face the operator. This is easily accomplished using the existing fasteners, mounting holes and wiring. Make sure the sensor is mounted with the bolt closest to the tank. It is not necessary to disconnect factory-installed wiring. If necessary, the control can be mounted remotely using an optional bracket. ***Note: Additional field wiring is necessary for remote location of the control.***

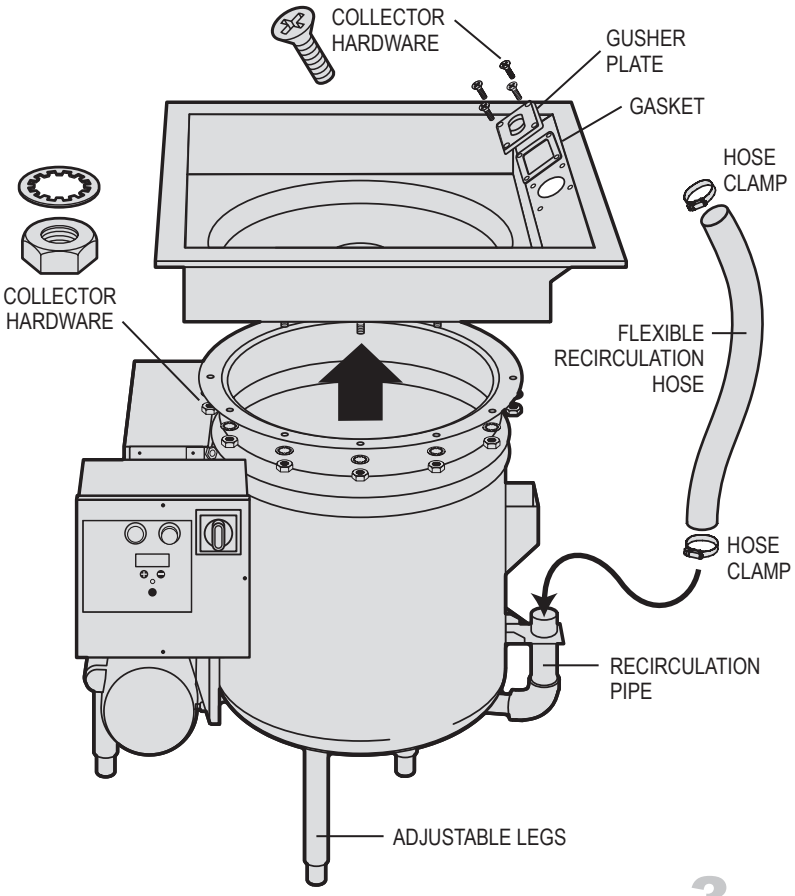

Note: Before installation of the Collector tank, the top should be welded into the table. Confirm that the top has the pre-installed gasket affixed before installation.

To install, raise the Collector tank up to the Collector top that has been welded into the table. Using the supplied hardware, attach the tank to the top. Adjust the legs by turning the foot counter clockwise until they extend to the floor. Attach gusher plate and gasket to the top with supplied hardware. Attach the flexible recirculation hose to the gusher plate and recirculation pipe using supplied hose clamps.

The tank must be oriented so that the recirculation plumbing is properly aligned. The control, pump and incoming water will be on the opposite side of the recirculation hose.

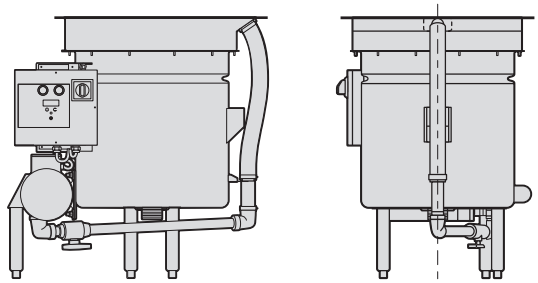

Plumbing

WATER SUPPLY

Plumb 3/4" lines from both hot and cold water supply sources and reduce to 1/2" before attaching to corresponding valves on the Scrap Collector water harness. The automatic water blender is factory set to the prefered temperature of 107°. If needed, increase the temperature by turning the yellow knob to a higher number. To decrease, turn to a lower number.

Note: To assure against leaks, tighten water harness fittings. They may come loose during shipment, fabrication or installation. Pressure regulators should be installed in areas where water pressure exceeds the recommended maximum of 80 psi.

WATER HARNESS DETAIL

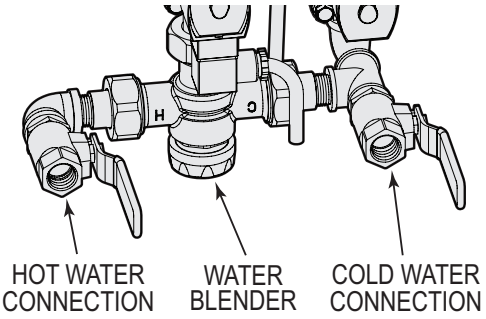

DRAIN PIPING

Plumb a 2" pipe from the 2" male threaded nipple located on the bottom of the Collector reservoir tank to the nearest approved drain. The drain line should have a minimum 1/4" slope of fall per running foot. It is the responsibility of the plumbing contractor to check all connections to ensure they are free of leaks.

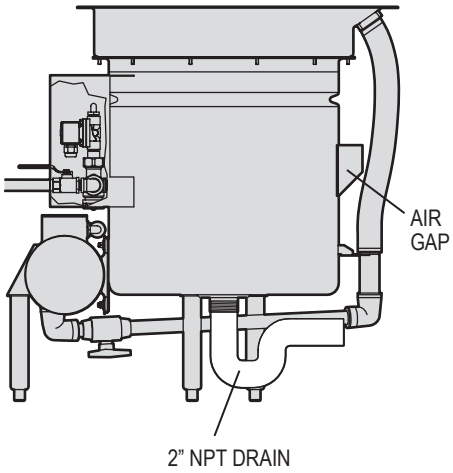

IMPORTANT!

The Salvajor Scrap Collector is equipped with a UPC approved air gap, eliminating the need for vacuum breakers.

MAKE ALL PLUMBING CONNECTIONS IN ACCORDANCE WITH NATIONAL AND LOCAL PLUMBING CODES.

(Scrap Collector shown - Pot/Pan Collector similar)

Electrical

ELECTRICAL

The pump motor and solenoid are factory pre-wired. Only one electrical connection is required if the control is installed with the provided wiring and mount. Run power from the building source to the 1/2" knockout on the bottom of the control.

If necessary, the control can be mounted remotely. Additional field wiring and hardware will be necessary. Contact service for installation advice.

IMPORTANT!

COMPLETE WIRING DIAGRAMS WILL BE FOUND INSIDE CONTROL PANEL.

HARD WIRE COLLECTOR ONLY. DO NOT CONNECT TO GFI.

MAKE ALL INSTALLATIONS IN ACCORDANCE WITH LOCAL AND NATIONAL ELECTRICAL CODES.

THE PUMP MUST BE CHECKED FOR PROPER ROTATION.

Always use watertight conduit and fittings when wiring this product.

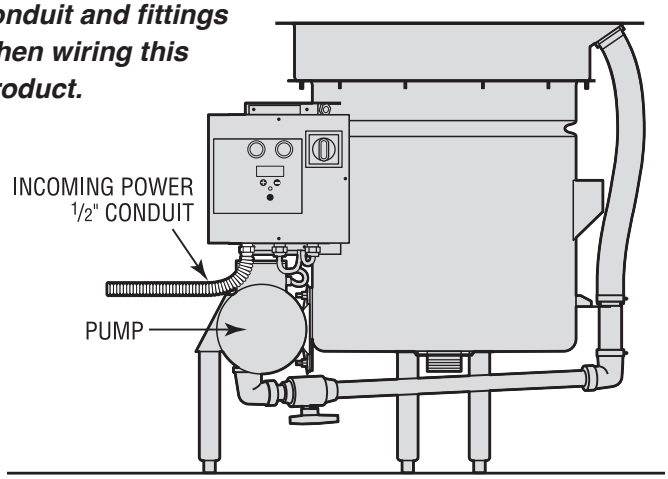

(Scrap Collector shown - Pot/Pan Scrap Collector similar)

TOTAL FULL LOAD AMPS

PHASE	115V	208V	230V	460-480V
1 PH	11	5.5	5.5	–
3 PH	–	3.2	3	1.5

PUMP MOTOR 3/4 HP

Operating Instructions

TO START:

1. Place OVERFLOW PIPE into drain opening in bottom of tank (center hole).
2. Position SCRAP BASKET inside tank.
3. Position SCRAP BASIN inside tank over SCRAP BASKET.
4. Press START button on CONTROL PANEL. ***(See HydroLogic Control Operating Instructions below.)***
5. Adjust WATER PLUME VALVE. Recommended plume height 4-6".

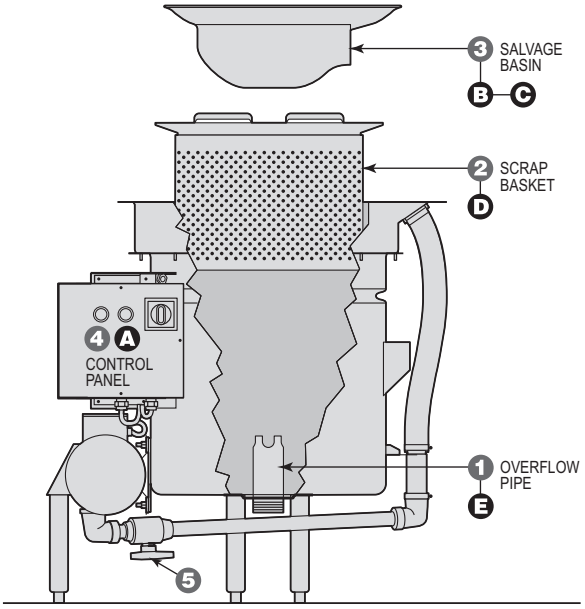

(Scrap Collector shown - Pot/Pan Collector similar)

TO STOP:

- **A** Press STOP button on the CONTROL PANEL.
- **B** Check for and remove dropped tableware trapped in SCRAP BASIN.
- **C** Remove and drain SCRAP BASIN.
- **D** Remove SCRAP BASKET and dump waste into trash receptacle or compost bin.
- **E** Remove OVERFLOW PIPE to drain tank. Rinse SCRAP BASIN, SCRAP BASKET, OVERFLOW PIPE, and tank interior thoroughly.

HYDROLOGIC® CONTROL OPERATING INSTRUCTIONS



1. Press the START button to begin operation. *Note: If the Line Disconnect is in the OFF position it will need to be turned to the ON position.*
   - Display will read "TANK FILL DELAY".*
   - The pump then starts.

   Note: *To bypass tank fill delay after emptying basket, press start button 2 times.*

2. Choose from 3 modes of operation. (Pressing ON/OFF will cycle thru them.)

   On/Off Mode - Display reads "SYSTEM ON". Unit will run until turned off.

   Water Saver Mode - Press ON/OFF to choose. The blue light will illuminate and the display will read "SYSTEM ON". Unit will run at a normal flow rate until the operator leaves. If the operator leaves, the display will read "RUN TIME" and a timer will start. The unit will run at a reduced flow rate until the operator returns or the run timer reaches 0:00. The unit will turn off when the run timer reaches 0:00. To increase or decrease the run time, use the + and − buttons to adjust to the desired run time. If the operator returns before the run timer reaches 0:00, the unit returns to normal operation and the run timer will reset.

   Auto Start Mode - Press ON/OFF to choose. The blue light will illuminate and the display will read "AUTO START ON". Unit will run at a normal flow rate until the operator leaves. If the operator leaves, the entire machine goes into standby and uses no water or electricity. Display reads "AUTO START OFF". When the operator returns, the unit starts and returns to normal operation. This mode doesn't have a run timer and will stay in standby until turned off.

   Note: *An ✻ appears in the upper left corner of the display when the operator is in range of the sensor.*

3. Press the STOP button to end all operations.

U.S. Pat. No. 7,815,134

Troubleshooting

WARNING! DISCONNECT THE POWER TO THE SYSTEM BEFORE SERVICING.

This troubleshooting guide is to provide basic checks to facilitate problem isolation and repair. All repairs should be made according to local codes and by a qualified technician.

PROBLEM	POSSIBLE CAUSE	SOLUTION
Collector will not turn on.	Tripped breaker.	Reset breaker.
	Disconnect in off position.	Turn to ON position.
	Blown fuses on transformer.	Replace blown fuse(s).
Tank will not fill up.	Drain open.	Install overflow pipe.
	Valves are closed.	Open valves.
Only cold or hot water is going into tank.	Hot or cold valve closed.	Open valves.
	Blender is out of adjustment.	Adjust setting of blender.
	Water connections reversed.	Correct water connections.
Pump motor not running.	Overload tripped.	Wait for overload to reset and check for cause of reset to trip, i.e. debris in pump.
	Contactor not energized.	Check contactor connections.
Water leaks from pump.	Pump seal/o-ring broken.	Replace seal/o-ring.
	Clamps loose.	Tighten clamps
Water plume is very low or Collector is not pumping water.	Clogged pump.	Open pump and remove debris.
	Clogged pump intake screen.	Clean screen.
	Water plume valve turned down.	Adjust water plume valve until plume is approximately 6”.
	Pump motor running backwards.	Reverse rotation of pump.
Sensor does not detect operator leaving work area.	Object blocking sensor.	Remove object from in front of sensor.
	Water Saver or Auto Start not turned on.	Turn on Water Saver or Auto Start.
	Dirty sensor.	Clean sensor.

IMPORTANT! Do NOT use corrosive chemicals for scrapping or cleaning purposes!

How it works

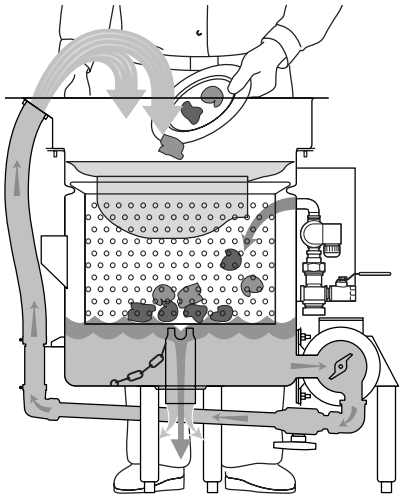

- Warm water enters the tank and the Collector pump recirculates water through the recirculation hose.
- As dishes are passed through the water plume, they are scrapped and pre-rinsed at the same time. Soluble food waste washes through the holes in the scrap basket and into the tank reservoir.
- Insoluble and fibrous food waste is retained in the scrap basket for disposal.

Salvajor Warranty

ONE YEAR PARTS AND LABOR

Equipment covered by this warranty:

All Salvajor commercial disposers, disposer systems, collector systems, accessories and parts.

Length of this warranty:

Parts and labor for 12 months from date of installation or 15 months from date of shipment from the factory, whichever expires first, on all disposers and systems. Accessories manufactured by Salvajor are covered for parts and labor when they are sold as part of the original disposer assembly or system package. Accessories not manufactured by Salvajor are covered for parts only. Accessories and parts sold separately are covered for parts and/or workmanship for 90 days from date of installation.

Warranty coverage:

Providing the equipment is unaltered, has been properly installed, maintained and operated, Salvajor will repair or replace at no cost, defective parts due to material or workmanship, if such service is performed by a Salvajor Authorized Service Center. Parts wear is not considered a defect.

Conditions not covered by this warranty:

Faulty or improper electrical installations, faulty or improper plumbing installations, disposer jammed by foreign object, tripped overload (re-set button), clogged drains, pump jams, clogged solenoid valves, blown fuses, abuse, accidental damage, unit improperly sized for application according to factory recommendations.

This warranty is limited to the continental United States, Hawaii and Canada.

For your nearest Factory Authorized Service Center:

Call 1-888-SALVAJOR or 816-363-1030

Fax 1-800-832-9373 or 816-363-4914

www.salvajor.com

service@salvajor.com



GENERAL TERMS AND CONDITIONS OF SALE

These Terms and Conditions shall govern the transaction by and between The Salvajor Company (herein referred to as the "Seller") and the customer or person or entity purchasing goods ("Goods") from Seller (therein referred to as "Buyer"), together with any quotation or acknowledgment from Seller relevant to the sale of the Goods and all documents incorporated by specific reference therein, and shall constitute the complete and exclusive agreement governing the sale of Goods by Seller to Buyer. Buyer's acceptance of the Goods will manifest Buyer's assent to these Terms and Conditions.

1. PRICES

Unless otherwise specified in writing by Seller, Seller shall have the right to change the price for the Goods to Seller's price for the Goods at the time of shipment. All prices are exclusive of taxes, transportation and insurance which are to be borne by Buyer.

2. TAXES

All taxes or government charge (or increase in same) affecting Seller's costs or which seller is otherwise required to pay or collect in connection with the sale, purchase, delivery, storage processing, use or consumption of Goods shall be for Buyer's account and shall be added to the price.

3. TERMS OF PAYMENT

Net 30 days invoices will bear the date on which shipment is made and terms are based upon date of shipment and not on date of arrival. Seller shall have the right among other remedies, to terminate or suspend performance under any order, if Buyer fails to make any payment when due. Buyer shall be liable for all expenses, including attorney's fees, relating to the collection of past due amounts. Delinquent payments shall bear interest at a rate to be determined by Seller, which shall not exceed the legal maximum rate, from the date due until paid. Should Buyer's financial responsibility become unsatisfactory to Seller, Seller may require cash payments or satisfactory security.

4. SHIPMENT AND DELIVERY

Deliveries are made F.O.B. Seller's shipping point. Risk of loss or damage and liability therefore shall pass to Buyer upon delivery to carrier. Shortages or damages must be acknowledged and signed for at the time of delivery. While Seller will use all reasonable commercial efforts to maintain the delivery date (s), all shipping dates are approximate and not guaranteed. Seller reserves the right to make partial shipments. If the shipment of the Goods is postponed or delayed by Buyer for any reason, Buyer agrees to reimburse Seller for any and all storage costs and other resulting expenses.

5. LIMITED WARRANTY

Subject to the limitations of Section 6 Seller warrants that the Goods manufactured by Seller will be free from defects in material and workmanship and meet Seller's published specifications at the time of shipment under normal use and regular service and maintenance for a period of one year from the date of shipment of the Goods by Seller unless otherwise specified by Seller in writing. Products purchased by Seller from a third party for resale to Buyer ("Resale Products") shall carry only the warranty extended by the original manufacturer whether or not the component is incorporated in goods sold by the Seller.

The warranties provided herein are the sole and exclusive warranties by seller with respect to the goods and are in lieu of and exclude all other warranties, express or implied arising by operation of law or otherwise, including without limitation, merchantability and fitness for a particular purpose whether or not the purpose or use has been disclosed to seller in specifications drawings or otherwise and whether or not seller's products are specifically designed and/or manufactured by seller for Buyer's use or purpose.

These warranties do not extend to any losses or damages due to misuse, accident, abuse, neglect, normal wear and tear, Buyer's negligence, unauthorized modification or alteration use beyond rated capacity, or improper installation, maintenance or application. To the extent that Seller has relied upon any specifications, information representation or operating conditions or other data supplied by Buyer or its agents to Seller in the selection or design of the Goods and the preparation of Seller's quotation, and in the event that actual operating conditions or other conditions differ from those represented by Buyer and relied upon by Seller, any warranties or other provisions contained herein which are affected by such conditions shall be null and void.

If within thirty (30) days after Buyer's discovery of any nonconformity with warranty within the warranty period, Buyer notifies Seller thereof in writing, Seller shall, at its own option repair, correct or replace F.O.B. point of manufacture, that portion of the nonconformity. Failure by Buyer to give such written notice within the applicable time period shall be deemed an absolute and unconditional waiver of Buyer's claim for such nonconformity. Goods repaired or replaced during the warranty period shall be covered by the foregoing warranties for the remainder of the original warranty period or ninety (90) days, whichever is longer.

Buyer assumes all other responsibility for any loss, damage, or injury to persons or property arising our of connected with or resulting from the use of Goods, either alone or in combination with other products/components.

6. LIMITATION OF REMEDY AND LIABILITY

The sole and exclusive remedy for breach of any term or condition or warranty hereunder (other than the warranty provided under Section 7) shall be limited at Seller's option to repair, correction or replacement under Section 5 or refund of the purchase price. Seller shall not be liable for damages caused by delay in performance and in no event, regardless of the form of the claim or cause of action (whether based in contract, infringement, negligence, strict liability, other tort or otherwise) shall Seller's liability to Buyer and/or its customers exceed the price paid by Buyer for the specific goods provided by Seller giving rise to the claim or cause of action. Buyer agrees that in no event shall seller's liability to buyer and/or its customers extend to include incidental, consequential or punitive damages. The term consequential damages shall include without limitation loss of anticipated profits business interruption loss of use or revenue, cost of capital or loss or damage to property or equipment.

It is understood that any technical advice furnished by Seller with respect to the use of the Goods is given without charge and Seller assumes no obligation or liability for the advice given, or results obtained, all such advice being given and accepted at Buyer's risk.

7. PATENTS AND COPYRIGHTS

Subject to the limitations of the second paragraph of Section 6, Seller warrants that the Goods sold except as are made specifically for Buyer according to Buyer's specifications do not infringe any valid U S patent or copyright in existence as of the date of shipment. This warranty is given upon the condition that Buyer promptly notify Seller of any claim or suit involving Buyer in which such infringement is alleged and, that Buyer cooperate fully with Seller and permit Seller to control completely the defense settlement or compromise of any such allegation of infringement. In the event such Goods are held to infringe such a U S patent or copyright in such suit, and the use of such Goods is enjoined, or in the case of a compromise or settlement by Seller, Seller shall have the right, at its option and expense to procure for Buyer the right to continue using such Goods or replace them with non-infringing Goods, or modify same to become non-infringing, or grant Buyer a credit for the depreciated value of such Goods and accept return of them.

8. EXCUSE OF PERFORMANCE

Seller shall not be liable for delays in performance or for non-performance due to acts of God, acts of Buyer, war, fire, flood, weather, sabotage, strikes, or labor or civil disturbance, government requests, restrictions, laws, regulations, orders of actions, unavailability of or delays in transportation, default of suppliers, or unforeseen circumstances or any event or causes beyond Seller's reasonable control Deliveries or other performance may be suspended for an appropriate period of time or canceled by Seller upon notice to Buyer in the event of any of the foregoing, but the balance of the agreement shall otherwise remain unaffected as a result of the foregoing. If Seller determines that its ability to supply the total demand for the Goods or to obtain material used directly or indirectly in the manufacture of the Goods is hindered, limited or made impracticable due to causes set forth in the preceding paragraph, Seller may allocate its available supply of the Goods or such material (without obligation to acquire other supplies of any such Goods or material) among itself and its purchasers on such basis as Seller determines to be equitable without liability for any failure of performance which may result therefrom.

9. CANCELLATION

Seller may cancel this agreement at any time for any reason upon 30 days written notice. Unless otherwise agreed in writing by Seller, Buyer may not cancel this agreement for any reason.

10. CHANGES

Buyer may request changes or additions to the Goods consistent with Seller's specifications and criteria. In the event such changes or additions are accepted by Seller, Seller may revise the price and dates of delivery. Seller reserves the right to change designs and specifications for the Goods without prior notice to Buyer, except with respect to Goods being made-to-order for Buyer.

11. ASSIGNMENT

Buyer shall not assign its rights or delegates its duties hereunder or nay interest therein or any rights hereunder without the prior written consent of the Seller, and any such assignment without such consent, shall be void. Seller may assign its rights and delegate its duties hereunder.

12. GENERAL PROVISIONS

These terms and conditions supersede all other communications, negotiations and prior oral or written statements regarding the subject matter of these terms and conditions. No change, modifications, rescission, discharge, abandonment, or waiver of these terms and conditions shall be binding upon the Seller unless made in writing and signed on its behalf by a duly authorized representative of the Seller. No conditions, usage or trade, course of dealing or performance, understanding, or agreement purporting to modify, vary, explain, or supplement these terms and conditions shall be binding unless hereafter made in writing and signed by the party to be bound and no modification shall be affected by the Seller's receipt, acknowledgment, or acceptance of purchase orders, shipping instruction forms, or other documentation containing terms at variance with or in addition to those set forth herein. No waiver by either party with respect to any breach or default or of any right or remedy and no course of dealing, shall be deemed to constitute a continuing waiver of any other breach or default or of any other right or remedy, unless such waiver be expressed in writing and signed by the party to be bound. All typographical or clerical errors made by Seller in any quotation, acknowledgment or publication are subject to correction.

The validity, performance and all other matters relating to the interpretation and effect of this agreement shall be governed by the law of the state of Missouri. Buyer and Seller agree that the proper venue of all actions arising in connection herewith shall be only in the state of Missouri. The Convention for the International Sales of Goods shall not apply to this agreement.

13. COMPLIANCE WITH CERTAIN LAWS

These Goods shall be produced in compliance with the requirements of the Fair Labor Standards Act of I938, as amended and Executive Order 11246.

Printed in USA
Form No. II-SC/PC (04-26)