DESIGN TIPS

Think ahead when designing a ware washing station with these helpful tips

When designing a trough for a Trough Collector or TroughVeyor, design the front of the trough as close to the table edge as possible. This design will allow the operators to work in a comfortable position without leaning over to reach the trough.

TROUGH COLLECTOR

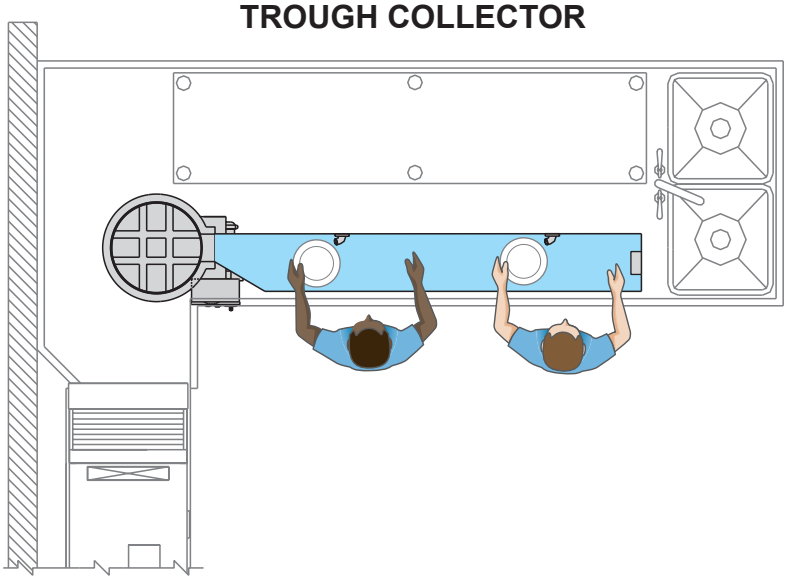

TROUGHVEYOR

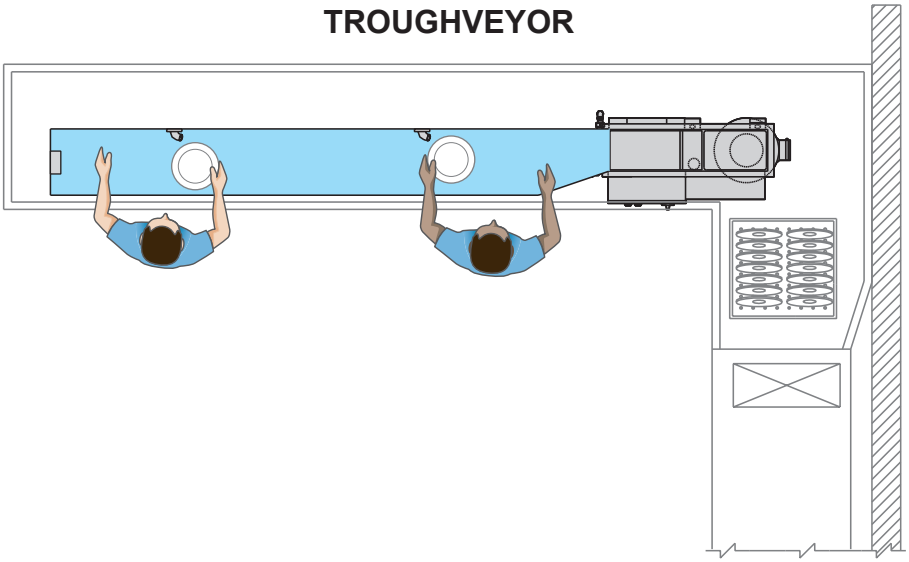

When designing an L-shaped trough for a Trough Collector or TroughVeyor, angle the corner of the trough for better water flow to the machine.

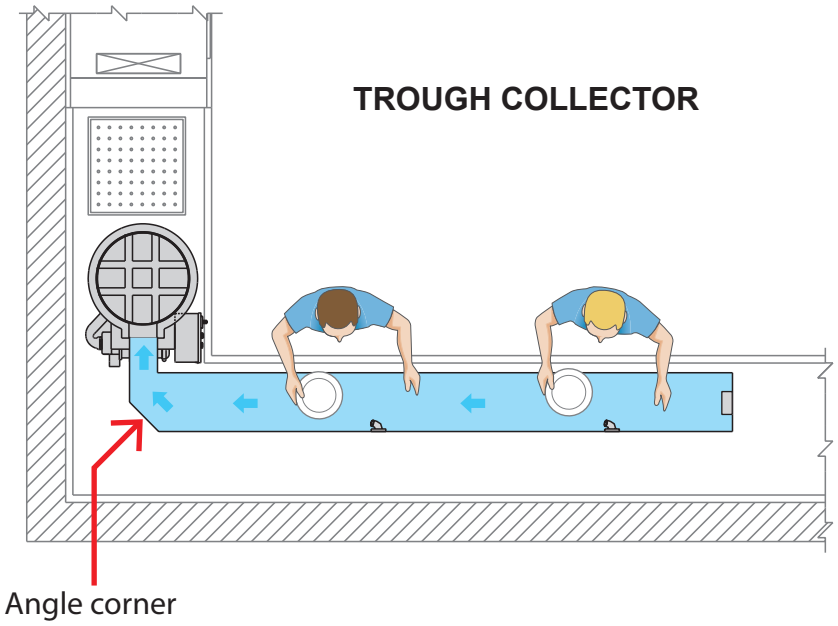

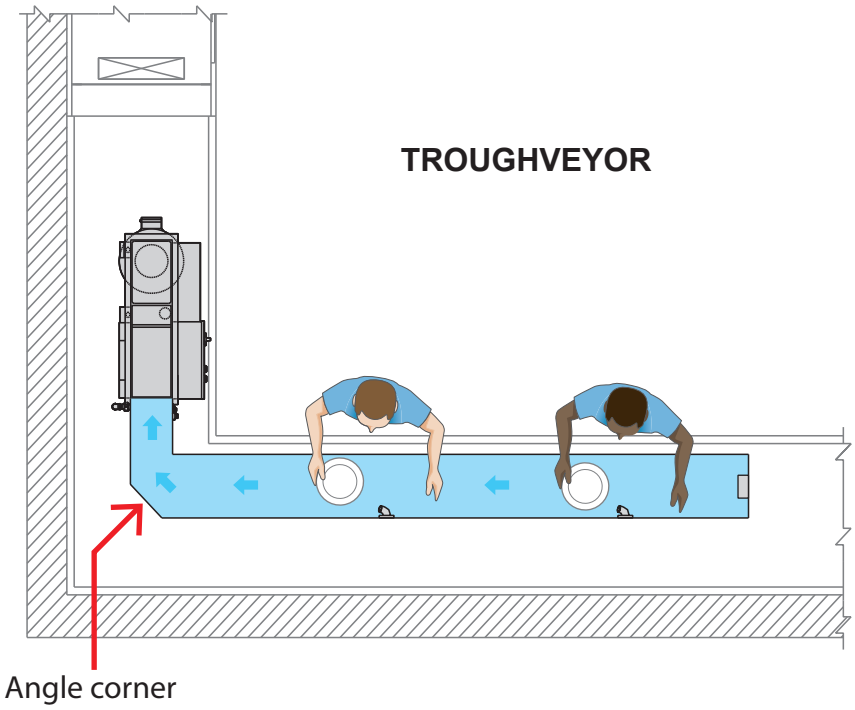

When designing a trough for a Trough Collector or TroughVeyor, leave a minimum of 6" from the end of the trough to the wall for installation of the diffuser and recirculation piping.

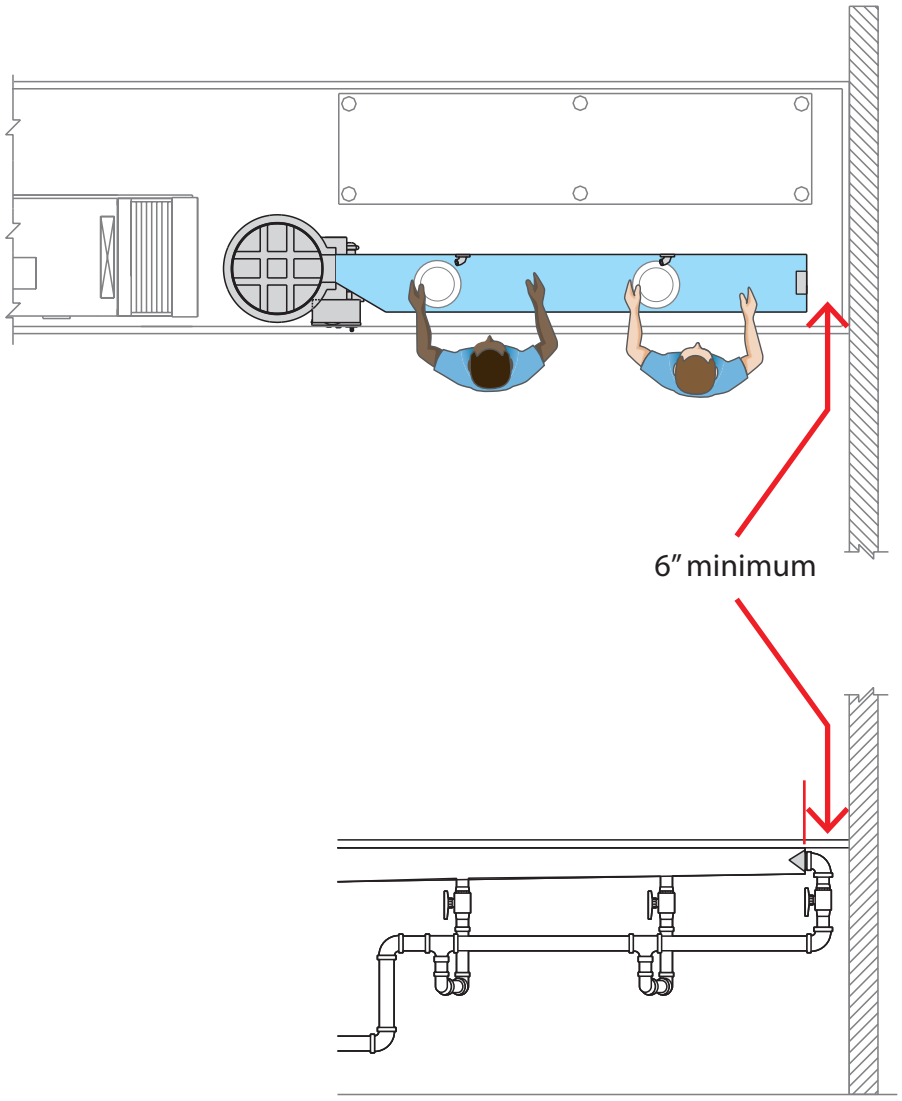

When designing a system in a table ensure that the control is easily accessible to the operator.

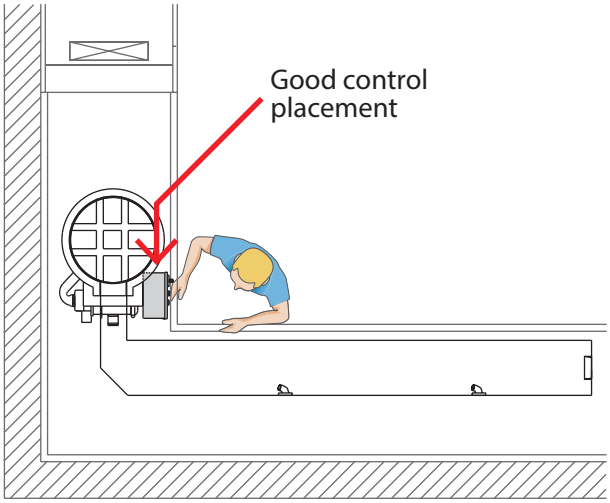

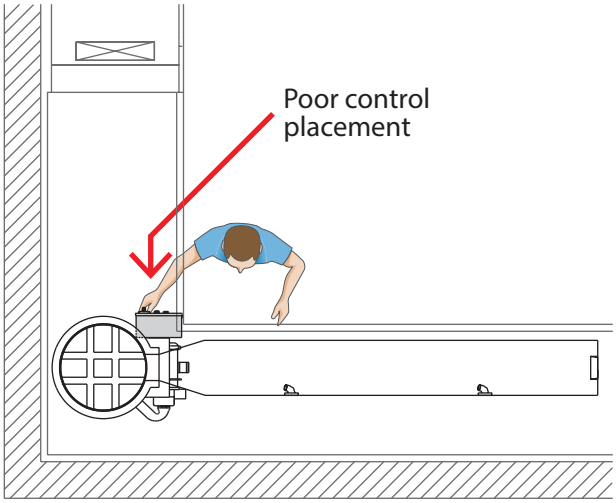

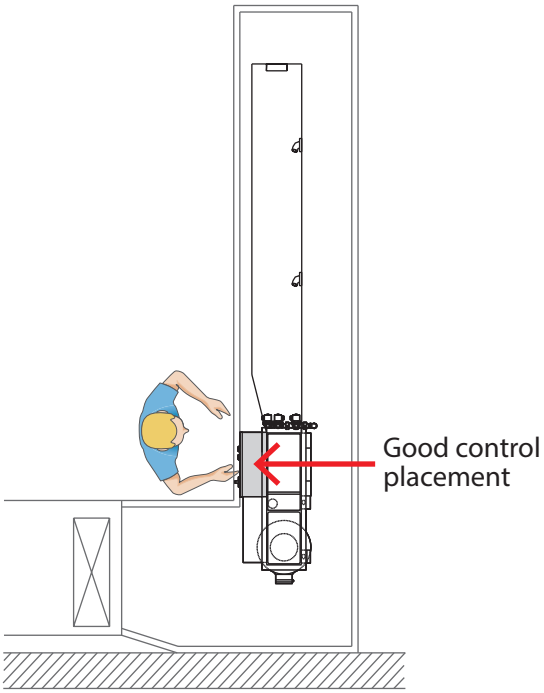

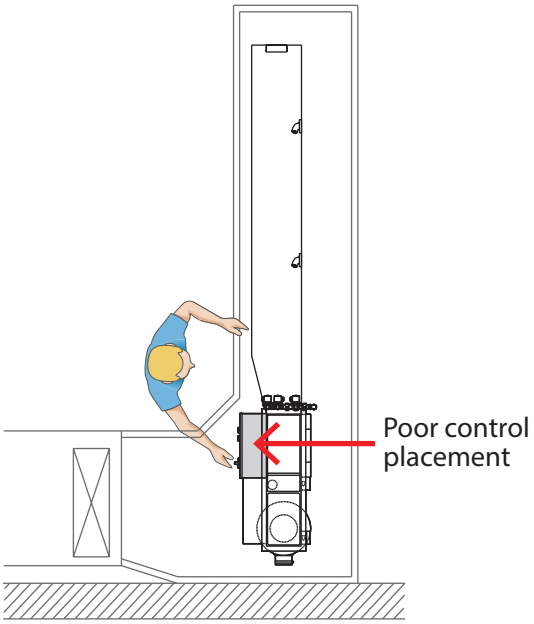

When designing a trough for a Trough Collector or TroughVeyor, keep the gusher heads 3 to 4 feet apart to allow room for the operators.

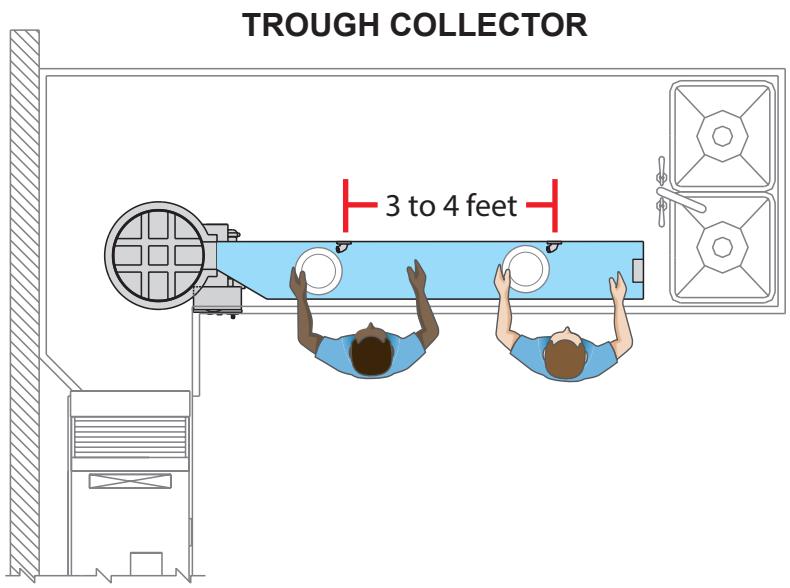

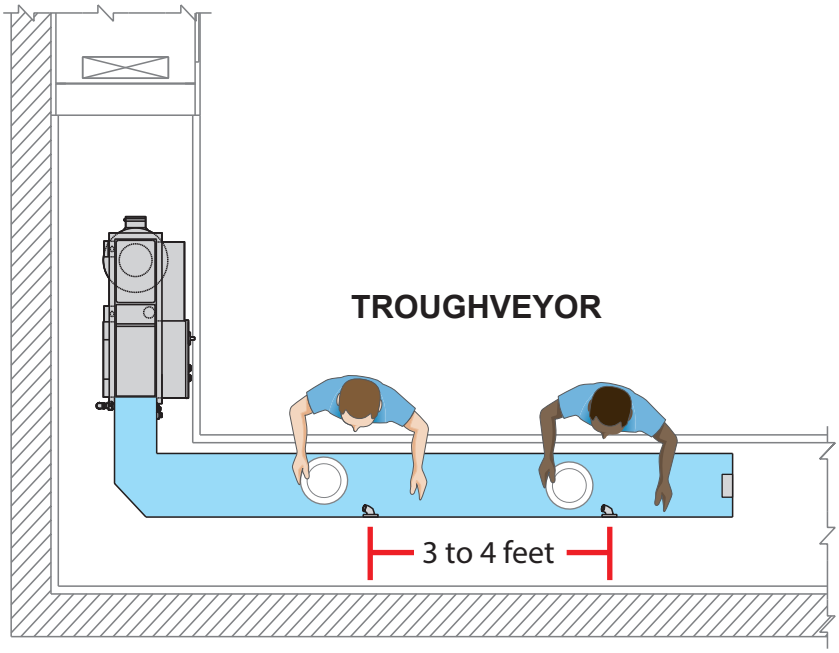

When designing a Trough Collector in the corner of a table, situate the Collector close to the front edge of the table. This design will make removing the basket easier without having to lean over to reach the basket.

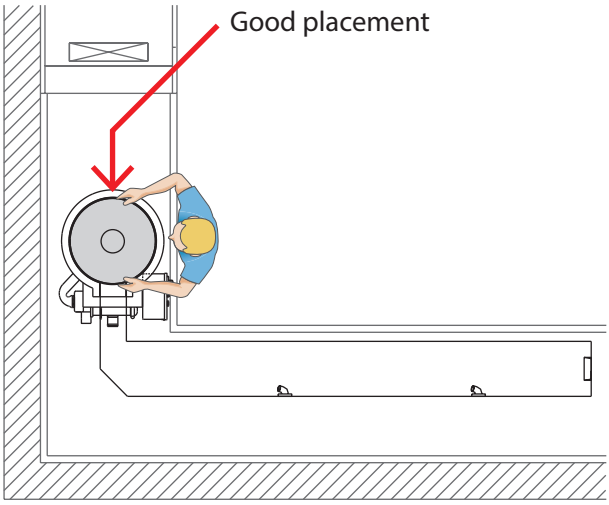

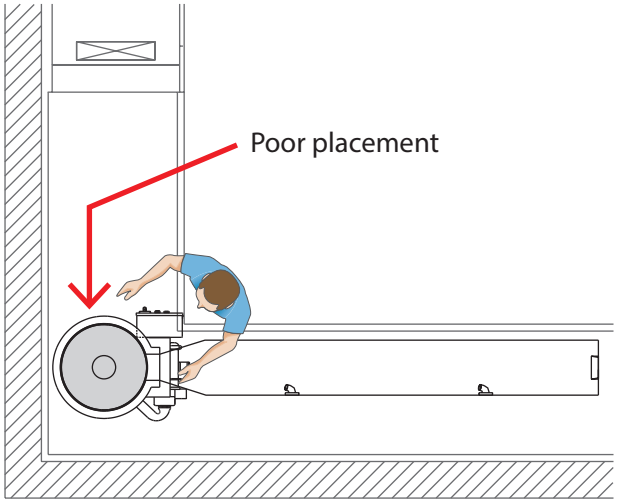

Be sure to leave a minimum of 24" between a Scrap Collector or ScrapMaster and the dishmachine to allow space for a dishrack.

POT/PAN COLLECTOR

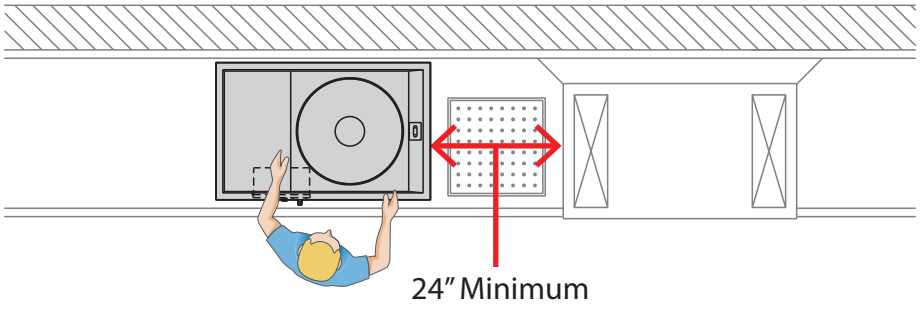

POT/PAN SCRAPMASTER

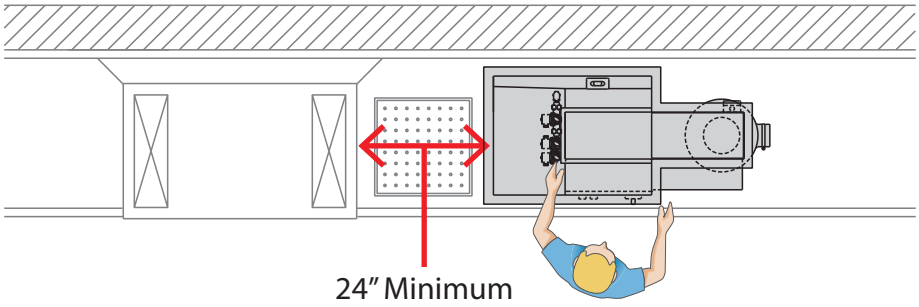

The top of a Trough Collector can rotate in 15 degree increments to ease installation while keeping the tank and control square with the front of the table.

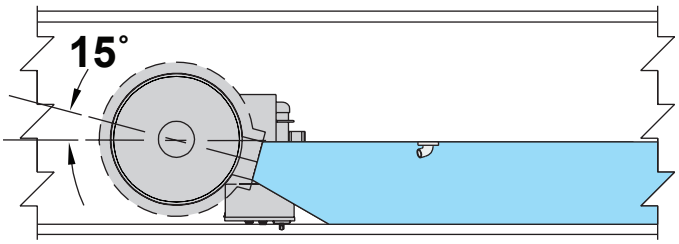

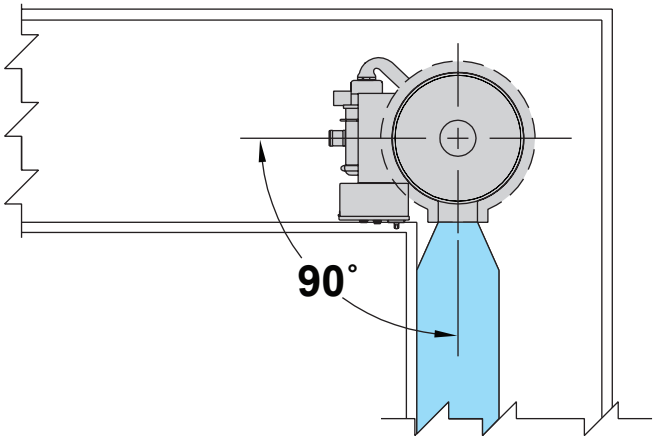

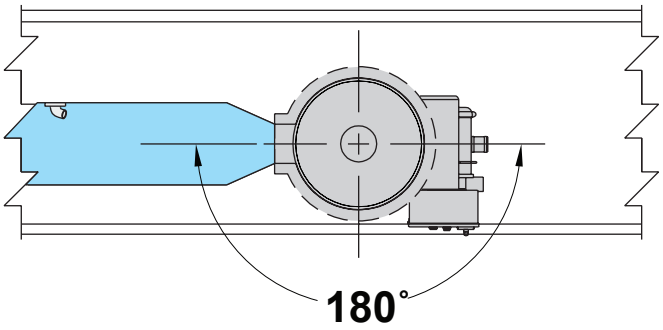

When designing a trough for a Trough Collector or TroughVeyor, design the trough so that the diffuser end has a depth of at least 3". The trough should have a fall of at least 3/32" per running foot.

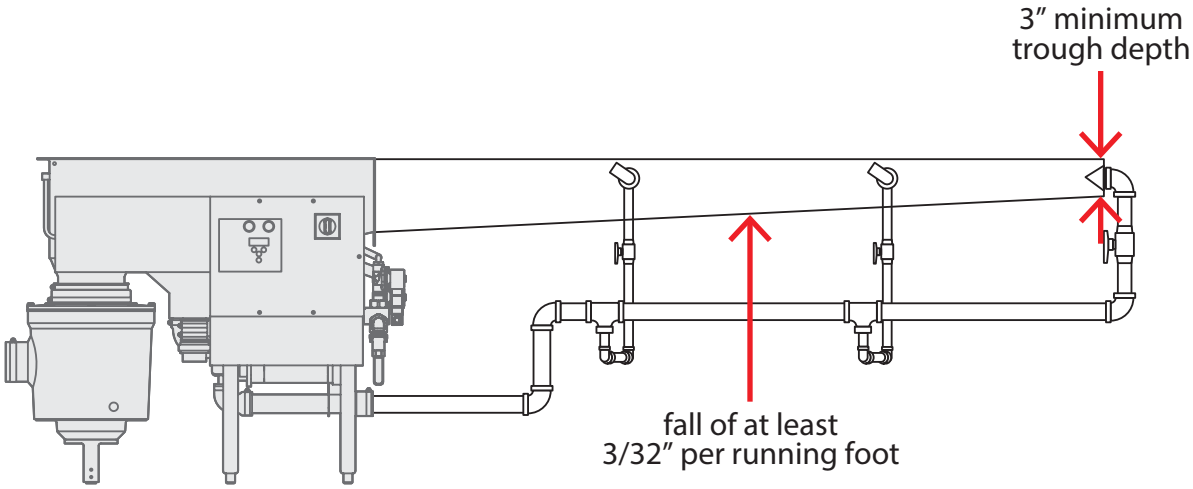

TroughVeyor shown, Trough Collector similar

SALVAJOR® Manufacturers of Commercial Food Waste Solutions - *Since 1944*

4530 East 75th Terrace Kansas City, MO 64132-2081, USA
816.363.1030 | Toll Free: 1.800.725.8256 | Service: 1.888.725.8256 | Fax: 1.800.832.9373
sales@salvajor.com | service@salvajor.com | **www.salvajor.com**

Printed in USA
Form No. DT (010/18)

TYPICAL INSTALLATIONS
Disposer Models 100, 200, 300 and 500

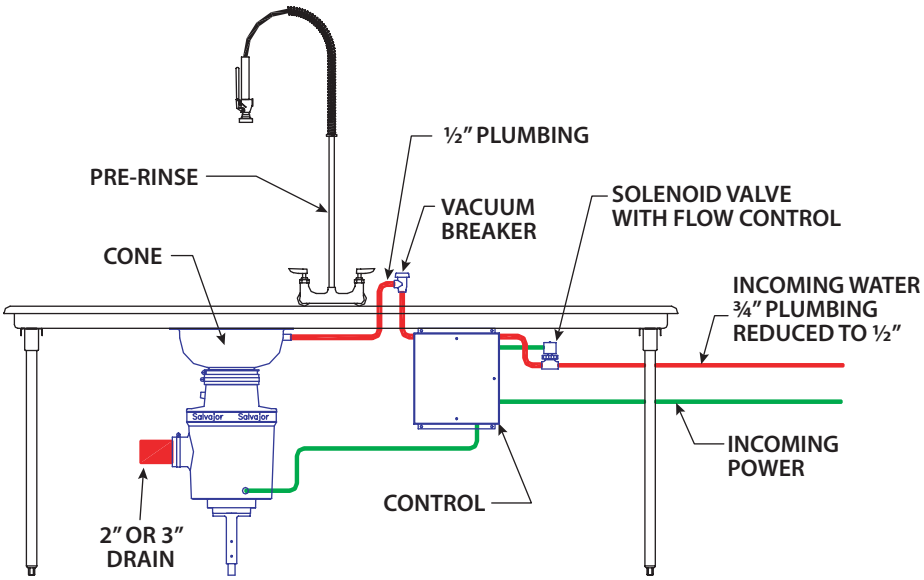

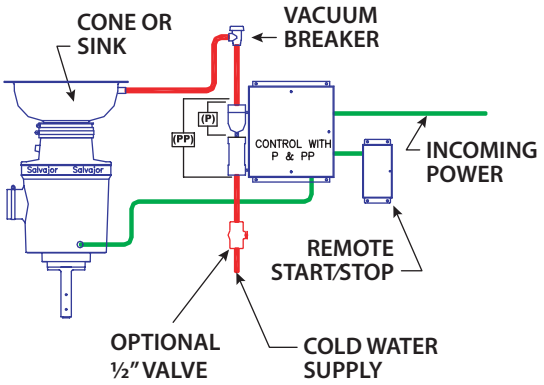

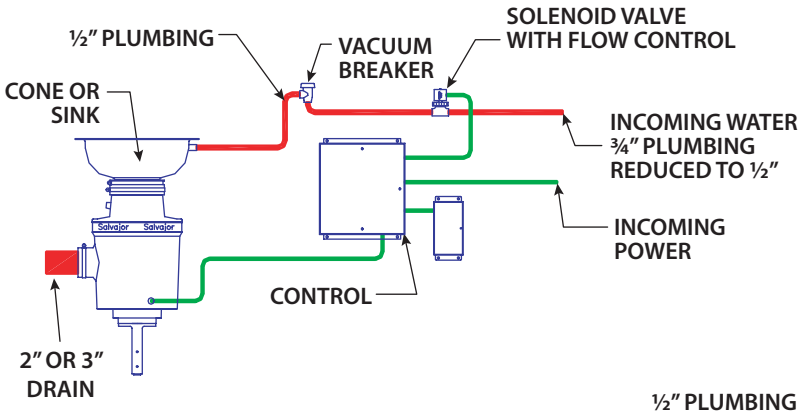

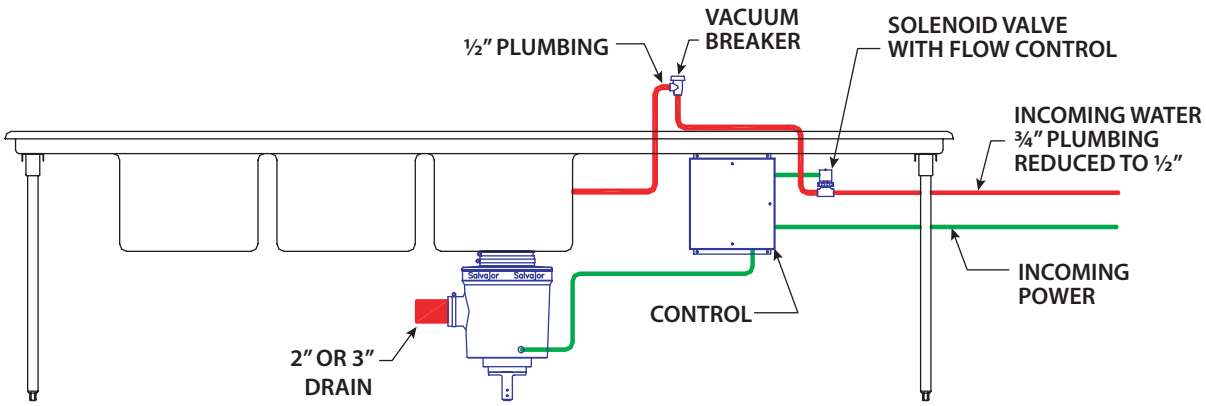

SALVAJOR® Manufacturers of Commercial Food Waste Solutions - *Since 1944*

4530 East 75th Terrace Kansas City, MO 64132-2081, USA
816.363.1030 | Toll Free: 1.800.725.8256 | Service: 1.888.725.8256 | Fax: 1.800.832.9373
sales@salvajor.com | service@salvajor.com | **www.salvajor.com**

Printed in USA
Form No. TID (05/18)

TYPICAL INSTALLATIONS

Pot/Pan Scrap Collector™ - Model P914

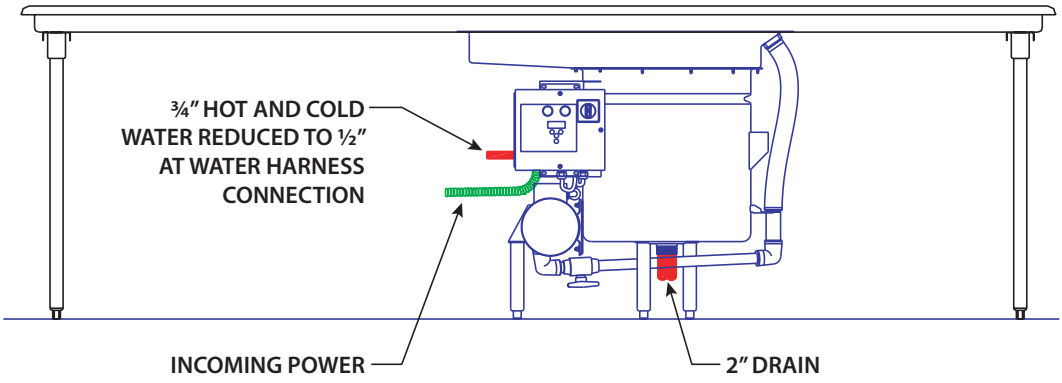

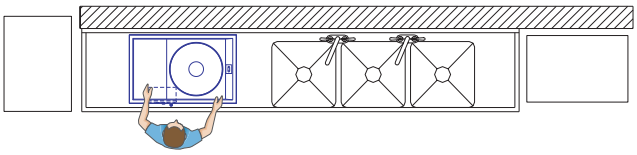

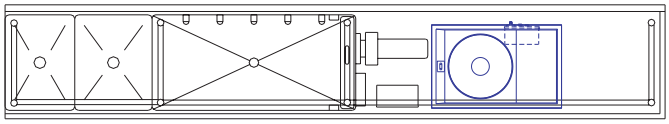

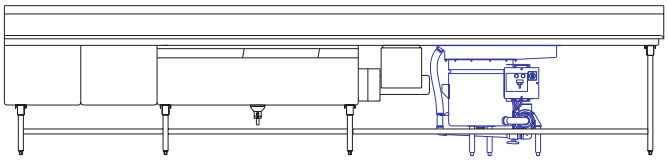

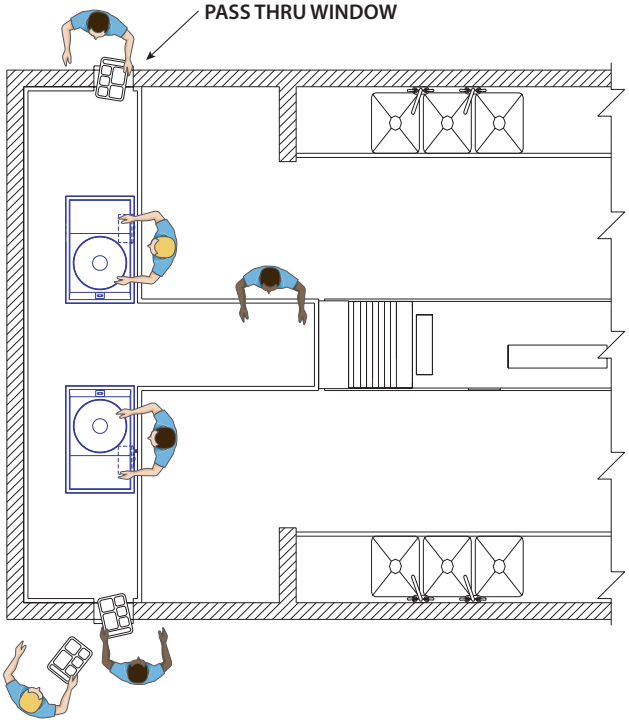

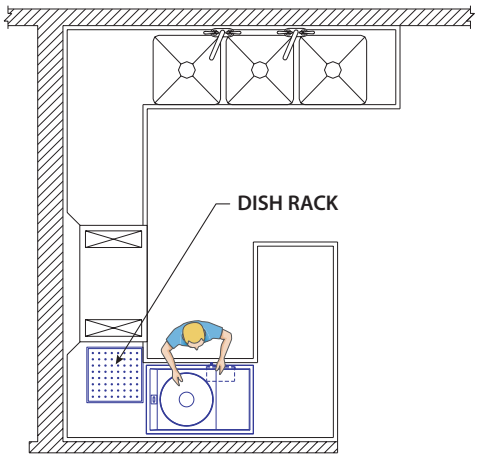

SALVAJOR® Manufacturers of Commercial Food Waste Solutions - *Since 1944*

4530 East 75th Terrace Kansas City, MO 64132-2081, USA
816.363.1030 | Toll Free: 1.800.725.8256 | Service: 1.888.725.8256 | Fax: 1.800.832.9373
sales@salvajor.com | service@salvajor.com | **www.salvajor.com**

Printed in USA
Form No. TIP914 (05/18)

TYPICAL INSTALLATIONS
Pot/Pan ScrapMaster® - Model PSM

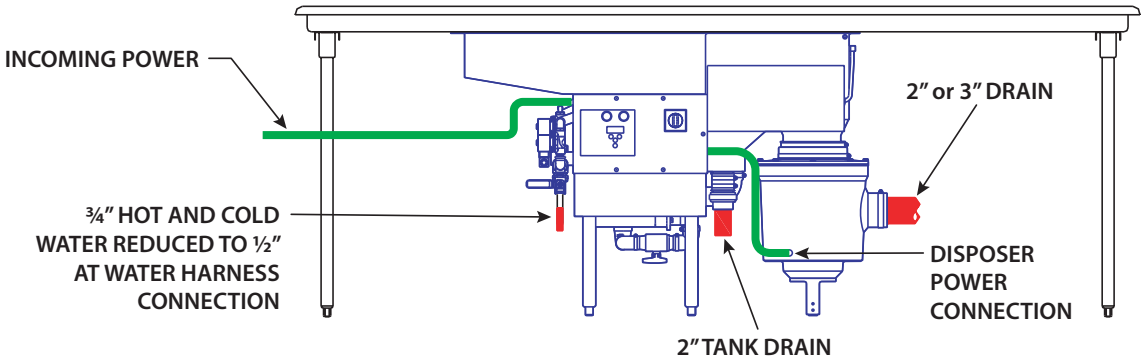

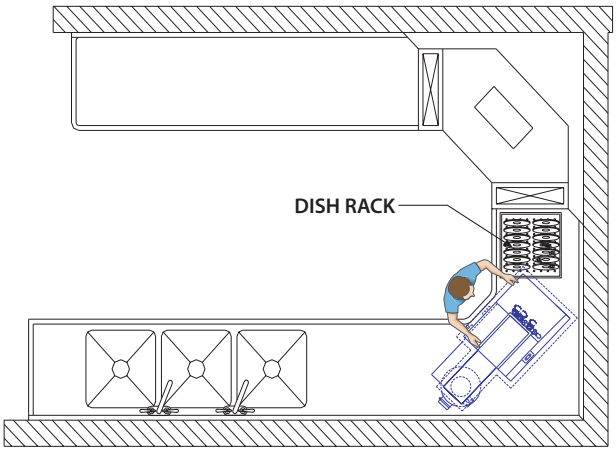

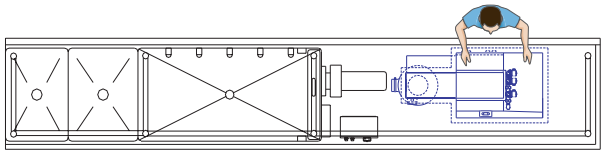

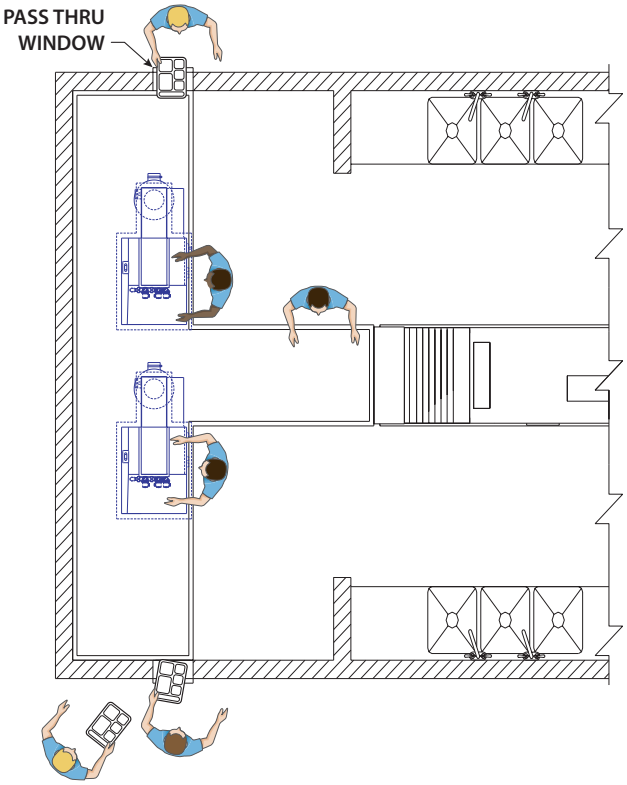

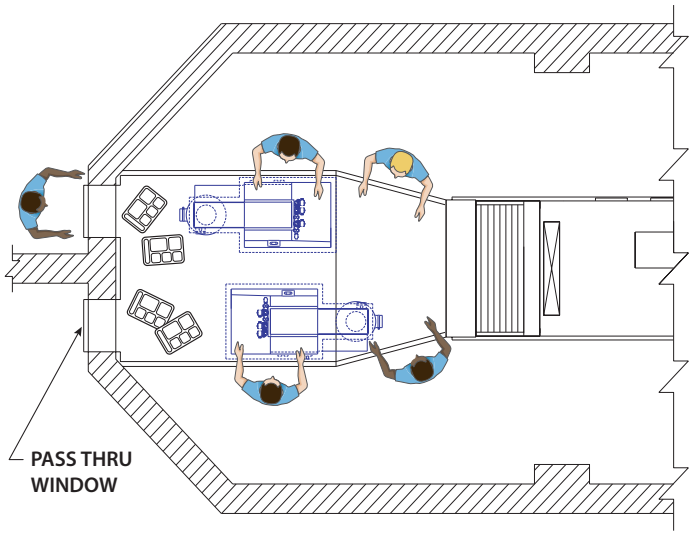

SALVAJOR® Manufacturers of Commercial Food Waste Solutions - *Since 1944*

4530 East 75th Terrace Kansas City, MO 64132-2081, USA
816.363.1030 | Toll Free: 1.800.725.8256 | Service: 1.888.725.8256 | Fax: 1.800.832.9373
sales@salvajor.com | service@salvajor.com | **www.salvajor.com**

Printed in USA
Form No. TIPSM (05/18)

TYPICAL INSTALLATIONS
Trough Collector™ - Model S419

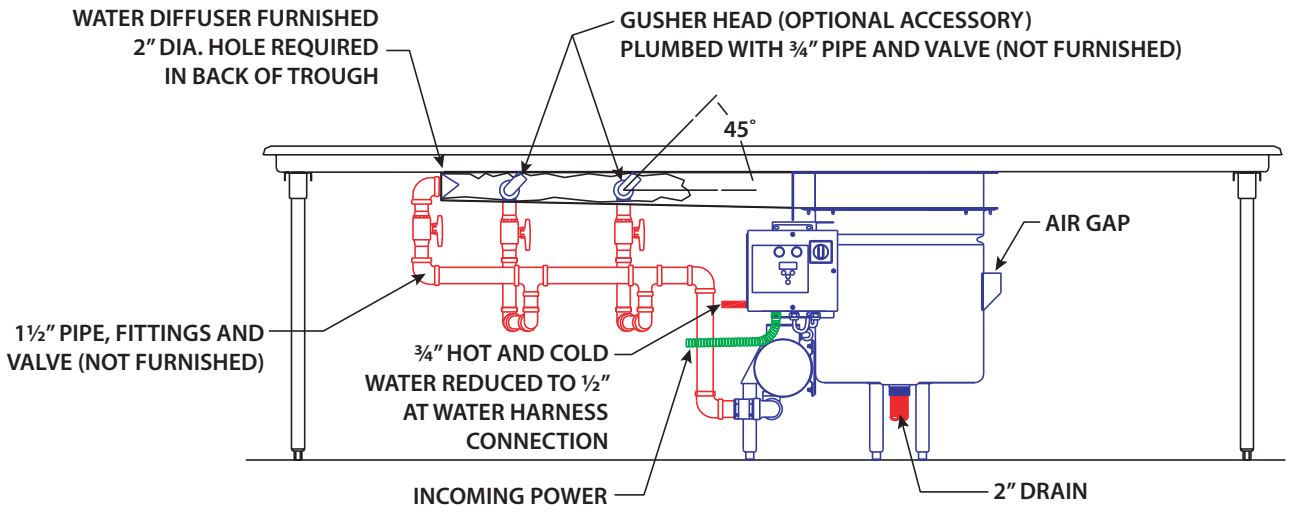

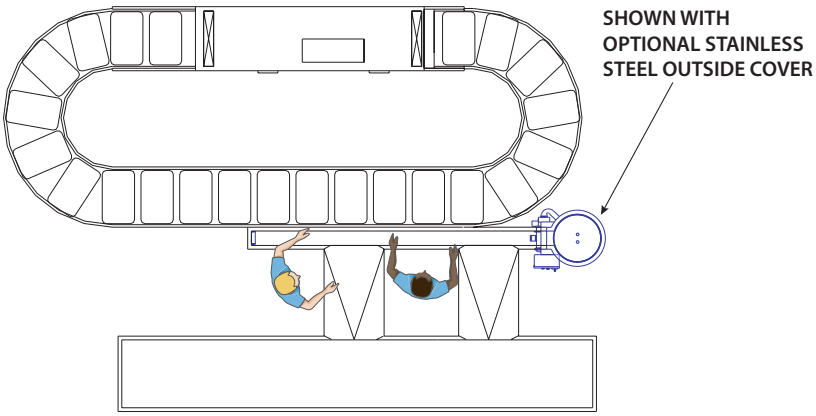

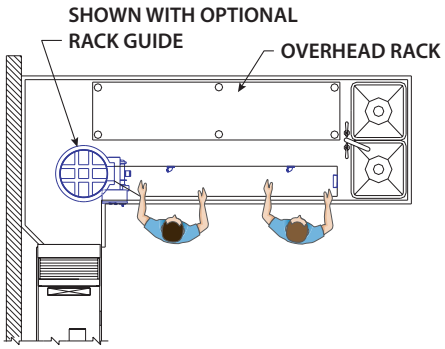

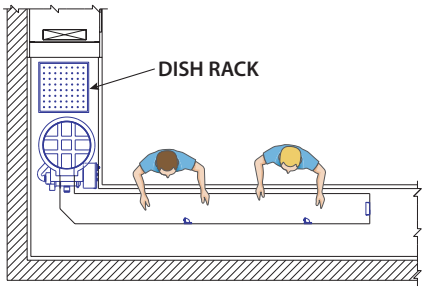

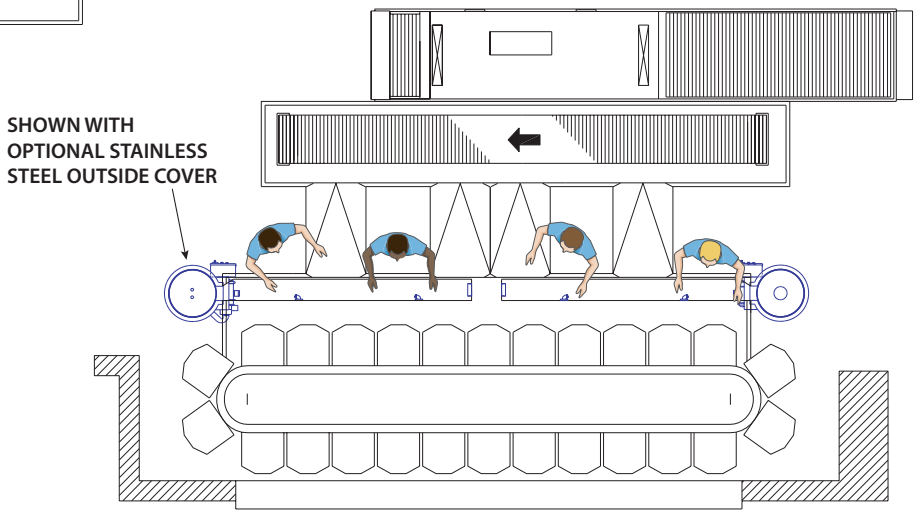

SALVAJOR® Manufacturers of Commercial Food Waste Solutions - *Since 1944*

4530 East 75th Terrace Kansas City, MO 64132-2081, USA
816.363.1030 | Toll Free: 1.800.725.8256 | Service: 1.888.725.8256 | Fax: 1.800.832.9373
sales@salvajor.com | service@salvajor.com | **www.salvajor.com**

Printed in USA
Form No. TIS419 (05/18)

TYPICAL INSTALLATIONS

Scrap Collector™ - Model S914

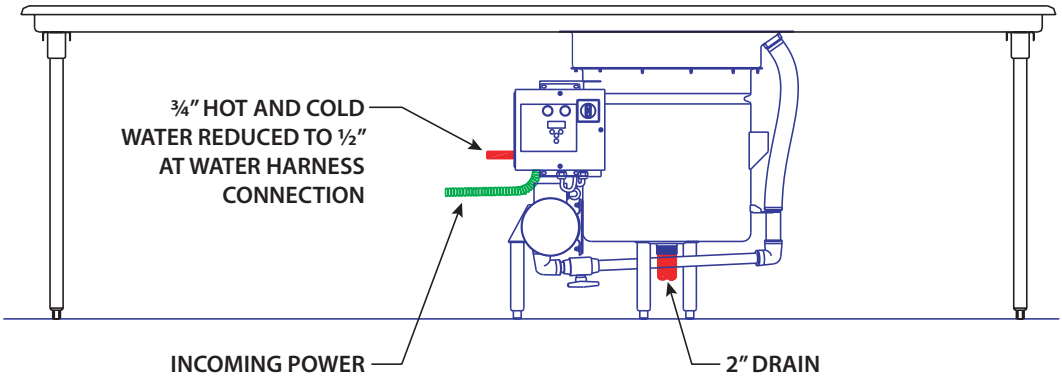

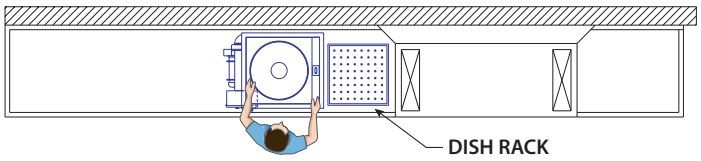

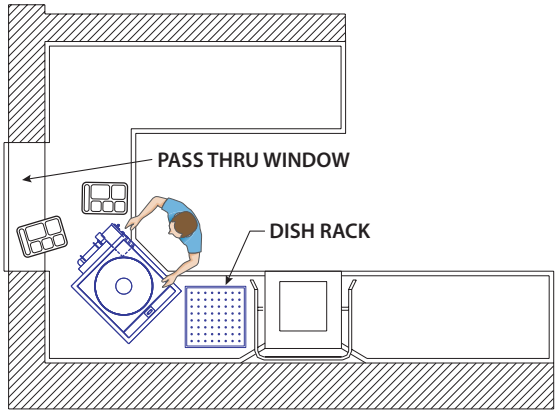

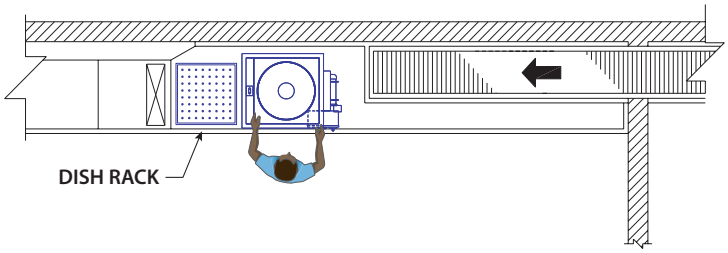

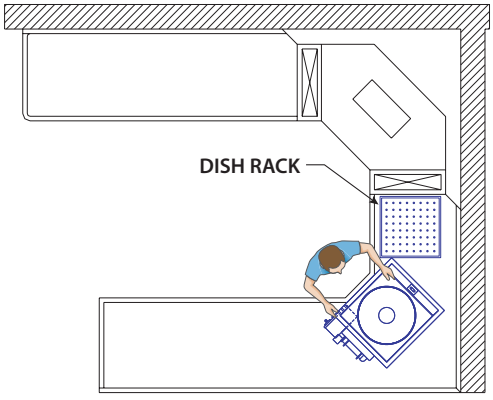

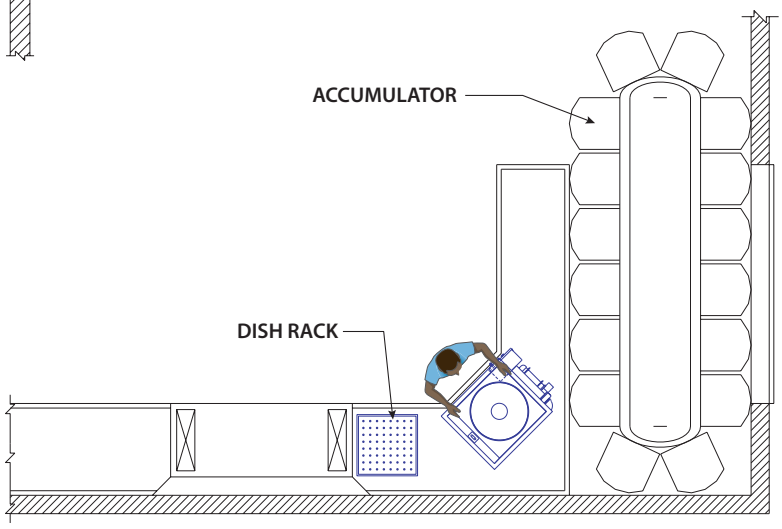

SALVAJOR® Manufacturers of Commercial Food Waste Solutions - *Since 1944*

4530 East 75th Terrace Kansas City, MO 64132-2081, USA
816.363.1030 | Toll Free: 1.800.725.8256 | Service: 1.888.725.8256 | Fax: 1.800.832.9373
sales@salvajor.com | service@salvajor.com | **www.salvajor.com**

Printed in USA
Form No. TIS914 (05/18)

TYPICAL INSTALLATIONS

ScrapMaster® - Model SM

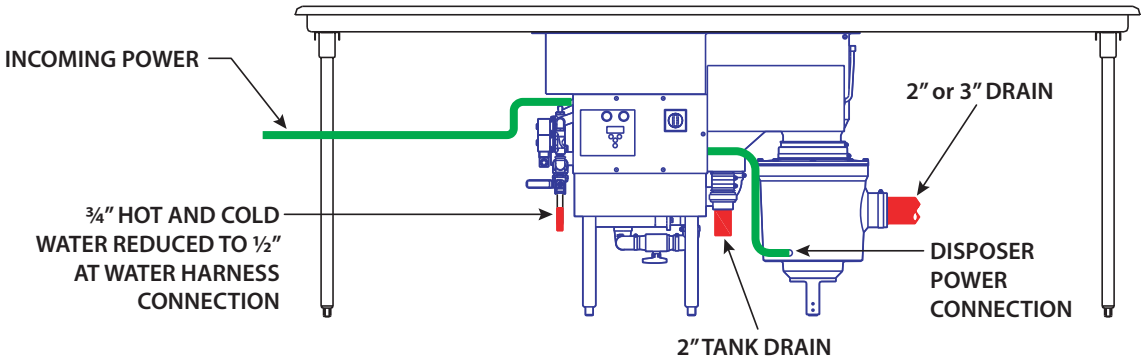

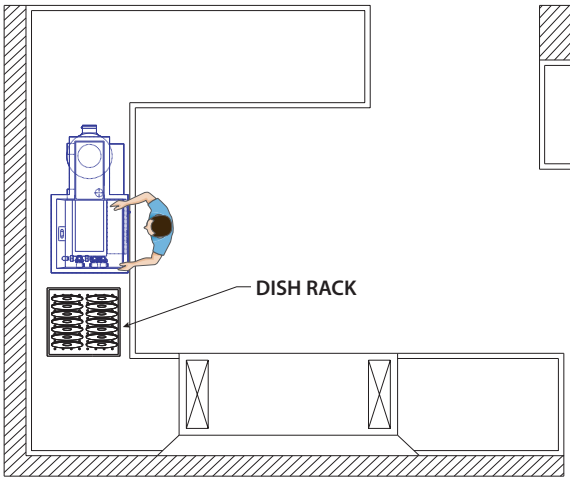

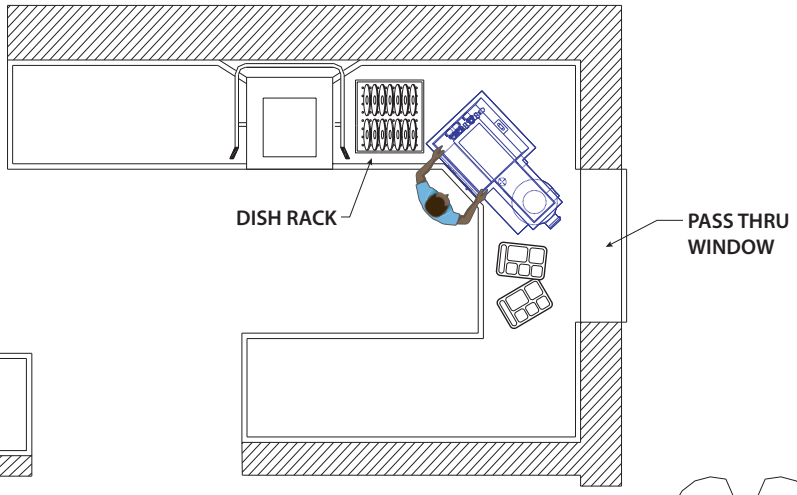

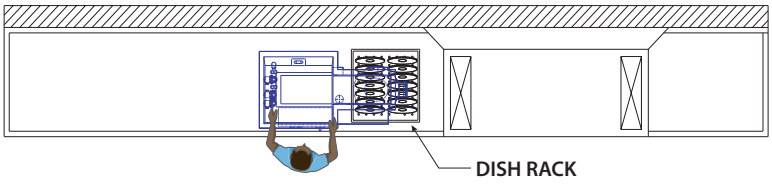

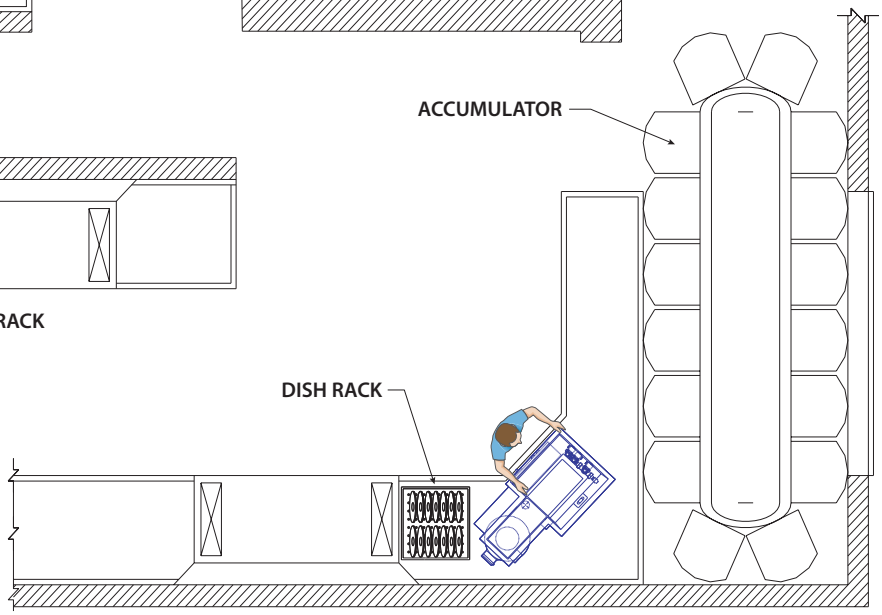

SALVAJOR® Manufacturers of Commercial Food Waste Solutions - *Since 1944*

4530 East 75th Terrace Kansas City, MO 64132-2081, USA
816.363.1030 | Toll Free: 1.800.725.8256 | Service: 1.888.725.8256 | Fax: 1.800.832.9373
sales@salvajor.com | service@salvajor.com | **www.salvajor.com**

Printed in USA
Form No. TISM (05/18)

TYPICAL INSTALLATIONS
TroughVeyor® - Model TV

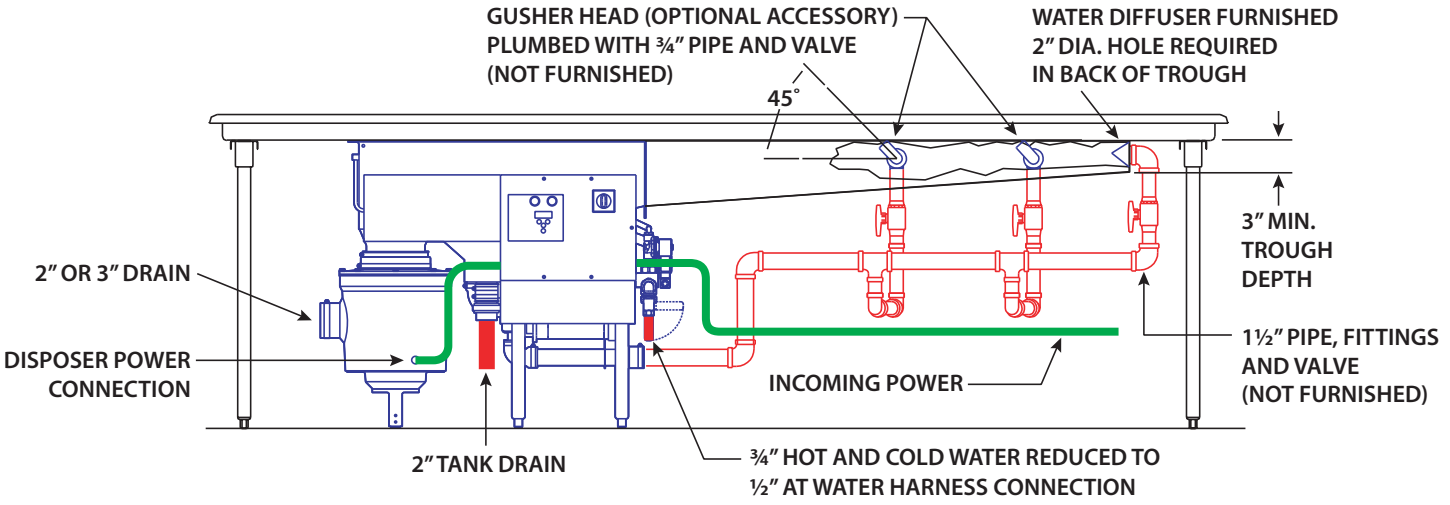

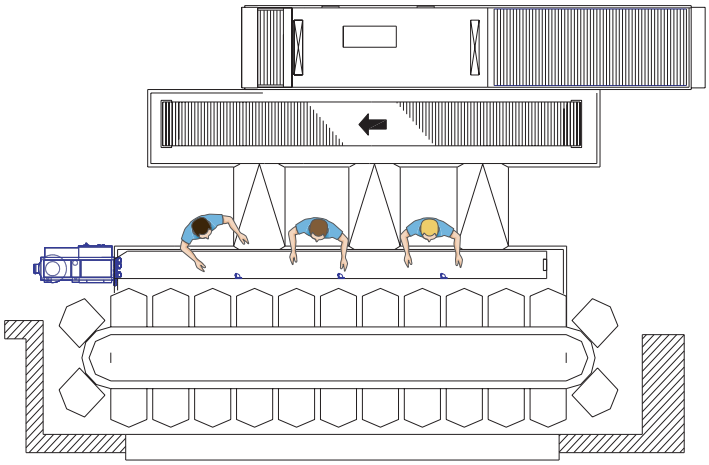

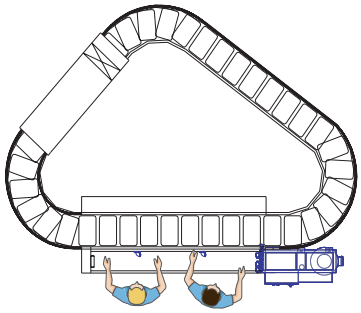

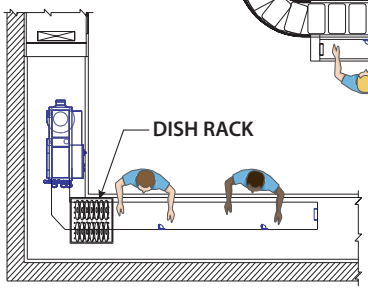

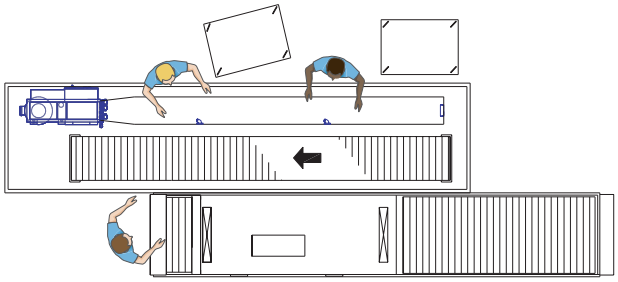

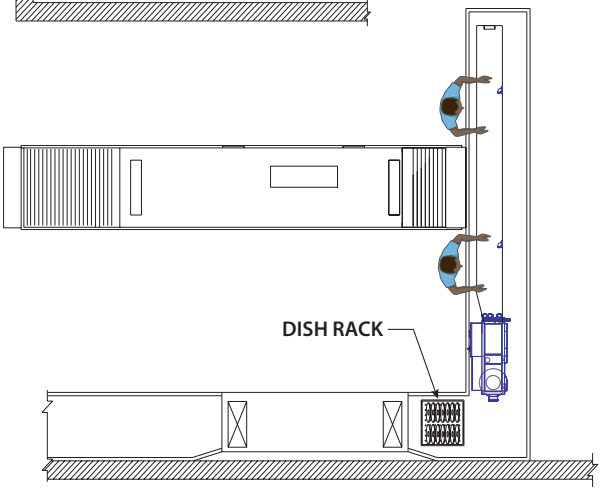

SALVAJOR® Manufacturers of Commercial Food Waste Solutions - *Since 1944*

4530 East 75th Terrace Kansas City, MO 64132-2081, USA
816.363.1030 | Toll Free: 1.800.725.8256 | Service: 1.888.725.8256 | Fax: 1.800.832.9373
sales@salvajor.com | service@salvajor.com | **www.salvajor.com**

Printed in USA
Form No. TITV (05/18)