Salvajor Scrap Collector and Pot/Pan Collector

PARTS BREAKDOWN for Models S914 and P914

For Serial Numbers starting at 29766 for Model S914 & 27668 for Model P914

System Components

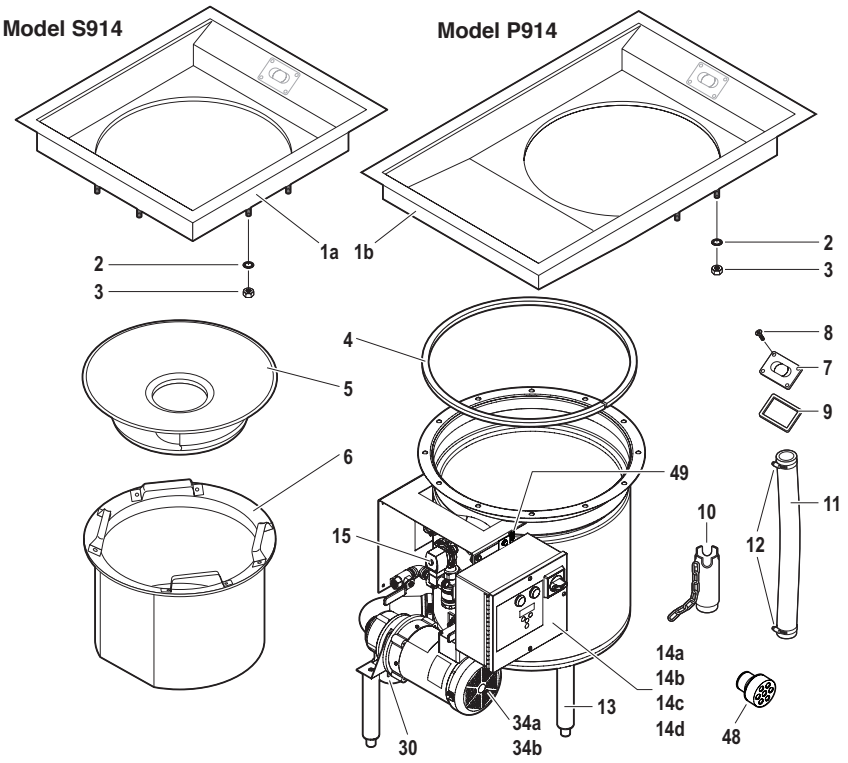

Item #15

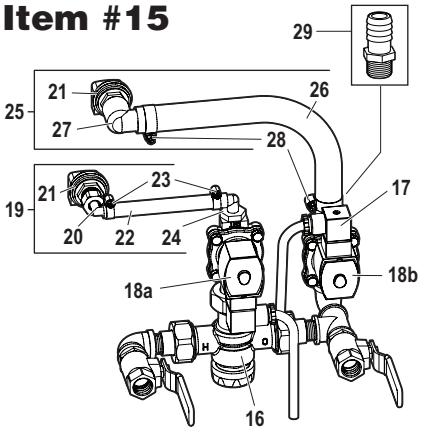

Item #49

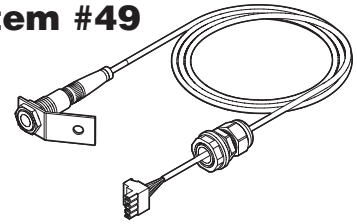

Item #30

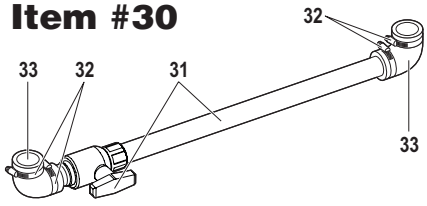

Item #34a
Item #34b *(shown)*

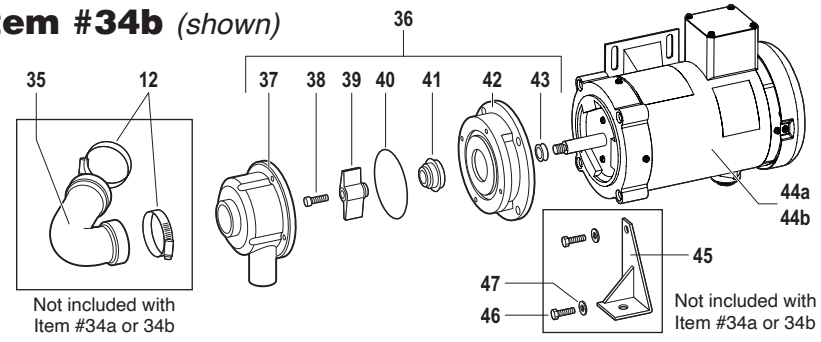

Not included with Item #34a or 34b

Not included with Item #34a or 34b

ITEM	PART NO.	DESCRIPTION
1a	980167	S914 Top Assembly
1b	980168	P914 Top Assembly
2	ILW14SS	Internal Lockwasher 1/4"
3	1420NSS	1/4-20 Hex Nut SS
4	996058	Top Gasket
5	992011	Scrap Basin
6	992013	Scrap Basket
7	980146	Gusher Plate
8	997066	10-32 x 5/8 Flat Head Phillips SS
9	996057	Gusher Plate Gasket
10	988006	Overflow Pipe Assembly
11	986055	Recirculation Hose
12	M32	Hose Clamp (sold separately)
13	914LESS	Stainless Steel Leg
14a	SS334	Control Panel 115V 1PH
14b	SS335	Control Panel 208-230V 1PH
14c	SS337	Control Panel 208-230V 3PH
14d	SS339	Control Panel 460V 3ph
15	980192	Water Harness 24V Assy (includes 16-29)
16	998124	Water Harness Blender (only)
17	994395	Din Cord Pigtail
18a	AS8242DIN	Solenoid Valve Assy 24V (2 GPM Flow Control)
18b	AS824DIN	Solenoid Valve Assy 24V (Unrestricted Quick Fill)
19	980159	Nozzle Assembly SC/PC/TC (includes 20-24)
20	998113	3/8" Nylon Elbow
21	2906	Fixed Nozzle
22	998022	3/8" Braided Tubing
23	997001	Hose Clamp
24	998046	Adaptor 3/8" X 1/2" 90 Deg Hose
25	980197	Quick Fill Nozzle Assembly (includes 21, 26-28)
26	988040	3/4" Braided Tubing
27	998136	Female 1/2" NPT 90deg 3/4" Barb
28	997183	1-1/16" Hose Clamp
29	998132	Adaptor 3/4" Barb x 1/2" NPT
30	980164	Pump Recirculation Pipe Assy (includes 31-33)
31	988027	Valve Assembly
32	S24	Hose Clamp
33	S914PDE	Rubber Elbow Discharge
34a	980076	Pump and Motor Assembly 1PH (includes 37-44)
34b	980077	Pump and Motor Assembly 3PH (includes 37-44)
35	996034	Elbow 125 Degree Rubber (sold separately)
36	980074	Pump Assembly (includes 37-43)
37	988010	Pump Housing
38	997089	Cap Screw (not used on 1-phase)
39	996027	Impeller
40	996028	O-Ring
41	ECK511	Seal Kit
42	988009	Pump Base
43	996030	V-Ring
44a	991060	Pump Motor 1PH
44b	991061	Pump Motor 3PH (shown)
45	980157	Leg Bracket (sold separately)
46	997061	Screw 3/8" (sold separately)
47	38L	Lockwasher (sold separately)
48	980110	Pump Intake Screen
49	980606	Sensor Kit for SS33

U.S. Pat. No. 7,815,134

Salvajor Model SS33

Automatic Start/Stop with Line Disconnect

PRE-WIRED CONTROL PANEL PARTS BREAKDOWN

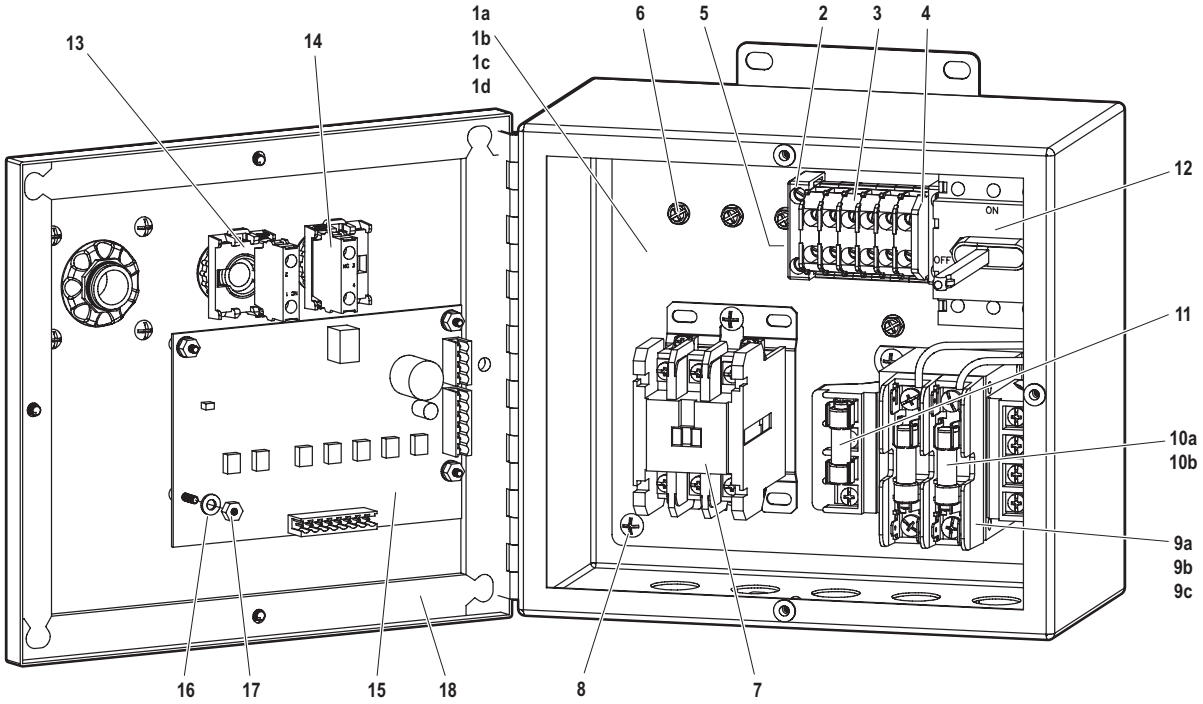

SS33 Item Numbers		
VOLTAGE	PHASE	ITEM NO.
115	1	SS334
208 *or* 230	1	SS335
208 *or* 230	3	SS337
460	3	SS339

ITEM	PART NO.	DESCRIPTION
1a	SS334IP	SS33 Inner Panel 115V 1PH
1b	SS335IP	SS33 Inner Panel 208V 1PH
1c	SS337IP	SS33 Inner Panel 208-230V 3PH
1d	SS339IP	SS33 Inner Panel 460V 1PH
2	994294	End Clamp
3	994292	Terminal Block
4	994293	End Barrier
5	994295	Din Rail Mounting Track
6	SCR1032	Ground Screw 10-32
7	994174	Contactor 24V
8	997093	Screw 10-32 X 3/8"
9a	994116A	Transformer Assembly 115V
9b	994115A	Transformer Assembly 208-230V
9c	994115B	Transformer Assembly 460V
10a	994095	Fuse 1 AMP
10b	994122	Fuse .5 AMP
11	994101	Fuse 2 AMP
12	980209	Line Disconnect Assembly (Includes 12a)
12a	984016	Line Disconnect (Handle Only)
13	ABD200A	Button Stop
14	ABD100B	Button Start
15	994392	Solid State Control Panel
16	997161	Flat Washer 6-32
17	997160	Hex Nut 6-32
18	910GA	Gasket Assembly 9 X 10 Box
19	997032	Screw 10-32 X 5/8"
20a	999235	Control Overlay
20b	999258	Control Overlay

10" x 9" Box Assembly

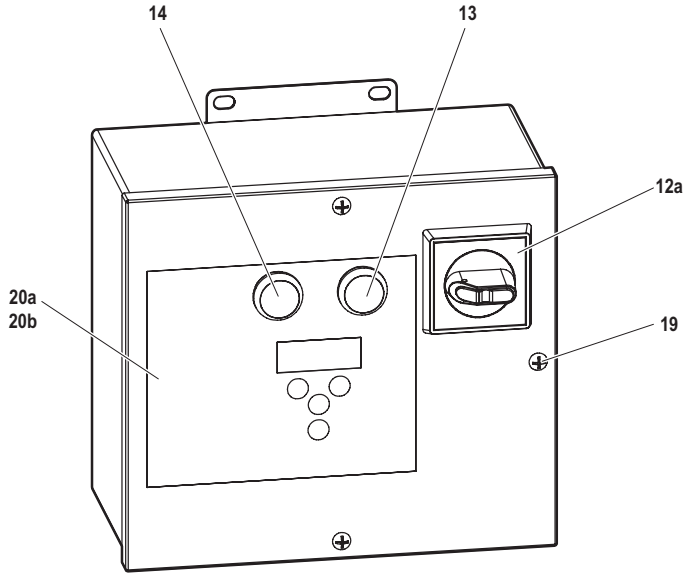

SALVAJOR

4530 East 75th Terrace Kansas City, MO 64132-2081, USA
Service: 1.888.725.8256 | Fax: 1.800.832.9373
service@salvajor.com | **www.salvajor.com**

Printed in USA
Form No. TC/COL 26606- (09-24)