# SALVAJOR® Trough Collector™

**Job:** _____ **Item No.:** _____

**Model** S**419**




HYDROLOGIC®
WATER & ENERGY SAVING TECHNOLOGY

## A Trough Conveying and Food Waste Collecting System

***Widely accepted in areas that restrict the use of food waste disposers.***

**Recirculated Water** used by the system for scrapping reduces water and sewer costs. The Trough Collector consumes only 2 gallons of fresh water per minute.

**Trough Water Volume** with the Trough Collector is 70 gallons per minute. This volume swiftly propels food waste down the trough and into the Collector with no additional hand movement, leaving both hands free for high-volume scrapping. The Trough Collector will let you keep up with large conveyor or flight dishmachines.

**Design Flexibility** is offered by the Collector as troughs can turn corners. The Collector's high water volume allows the design of wider, longer troughs allowing you to soak problem dishes or add gusher heads to pre-rinse compartmental trays.

**HydroLogic Water Saving Control** has an adjustable timer with user friendly LCD readout.

## Typical trough layout

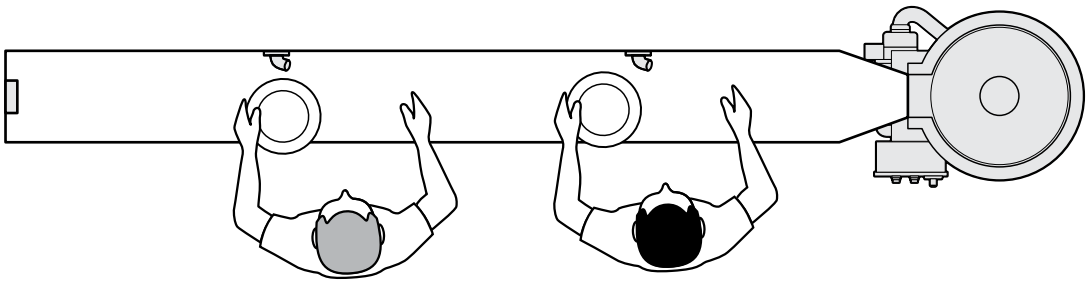

Typical trough layout is 12" wide and 10' in length with up to
2 optional gusherheads spaced 3' - 4' apart to accommodate 2 operators.

# Trough Collector™ Model S419

- **Trough must have a minimum 3" depth with a fall of at least 3/32" per running foot towards the collector.**
- **Minimum 6" clearance is required from the trough to the wall to allow room for recirculation piping.**
- **22" minimum clearance overhead for basket removal. An additional basket is recommended at additional cost.**

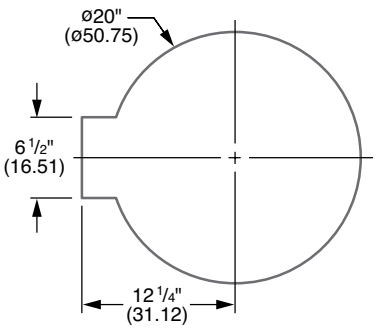


**TABLE CUTOUT DETAIL**

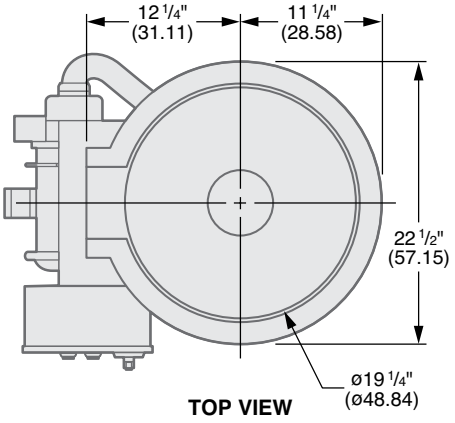


**TOP VIEW**

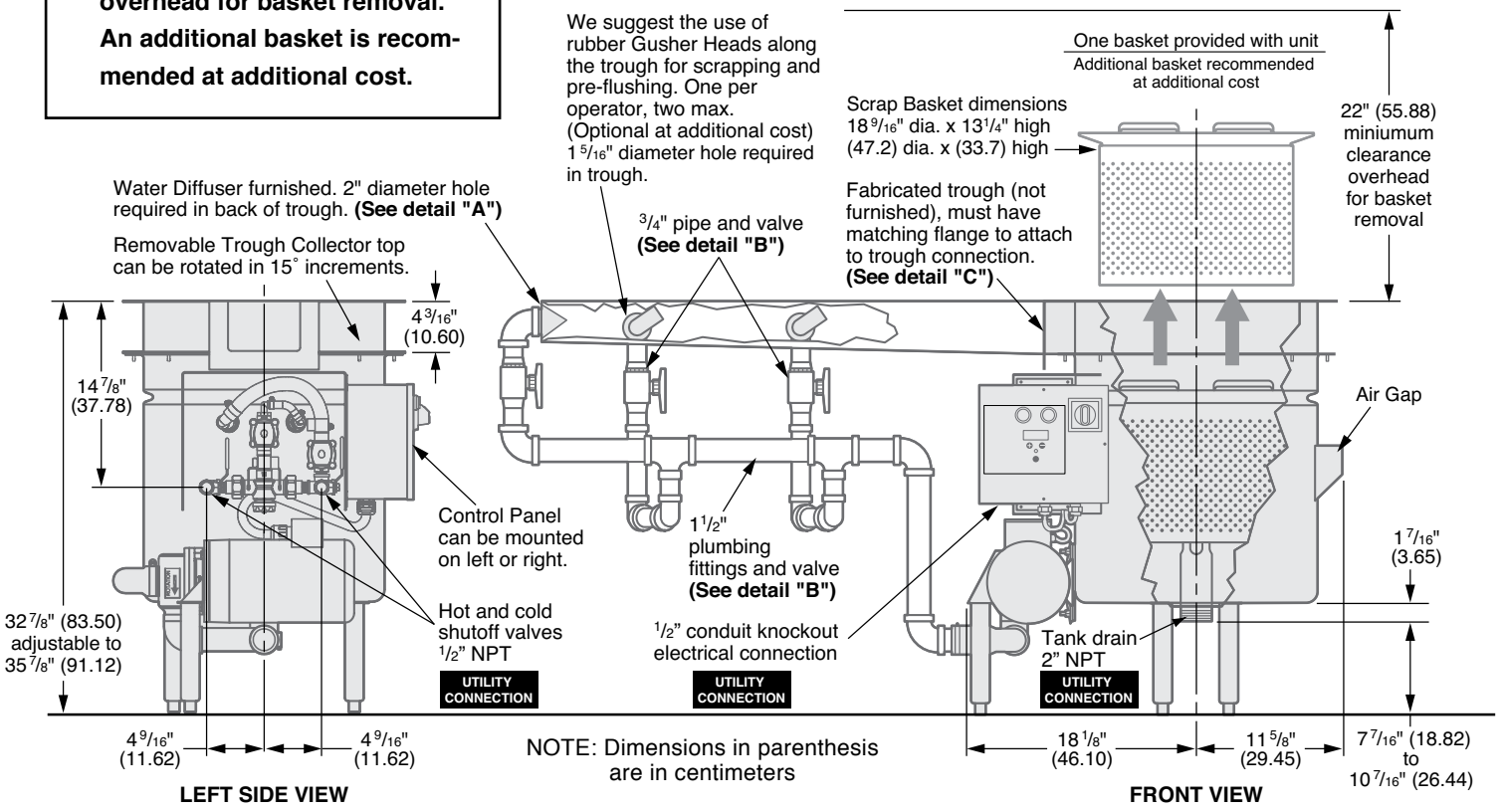


**LEFT SIDE VIEW**

NOTE: Dimensions in parenthesis are in centimeters

**FRONT VIEW**

## Detail "A" - Water Diffuser

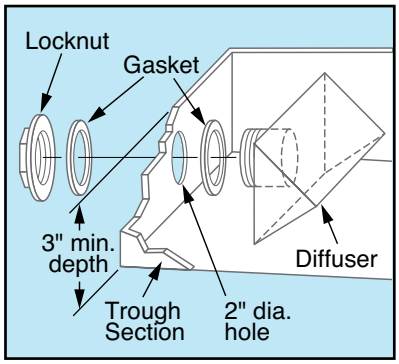


## Detail "B" - Recirculation

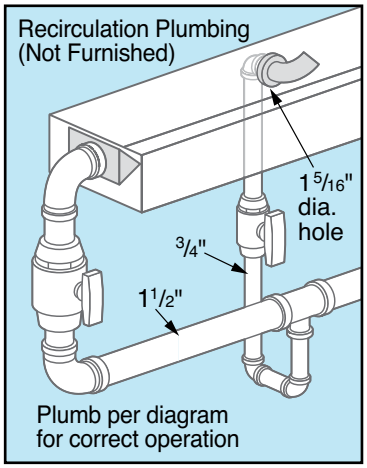


## Detail "C" - Trough Connection Flange

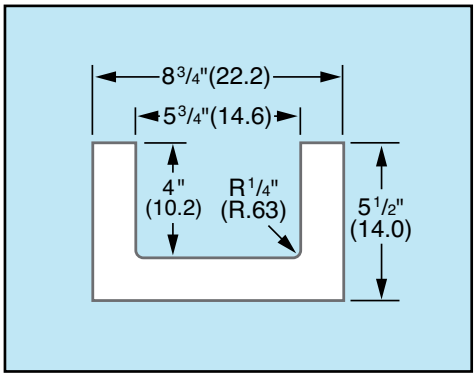

# Trough Collector™ Model S419

## UTILITY CONNECTIONS

- **Incoming electrical connection → factory wired control panel**
- **Incoming hot/cold water connection → factory plumbed water harness**
- **Drain connection → 2” NPT**

The control can be mounted on either side of the Collector using existing mounting bracket, mounting holes, fasteners and wiring for dish flow to the left or dish flow to the right.

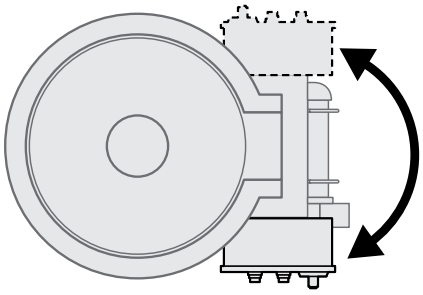

### #980104 Optional Remote Control Mounting Bracket

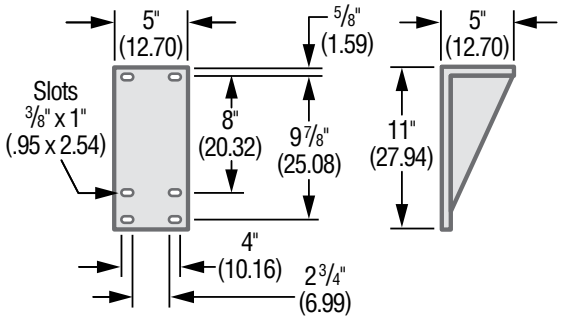


The control can be mounted remotely using optional remote mounting bracket. *Note: Additional field wiring is necessary.*

***All connections are to be made by qualified personnel who will observe all local and national codes.***

Upon request, the Trough Collector top may be shipped separately to an alternate location for fabrication.

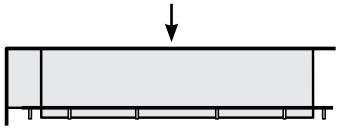

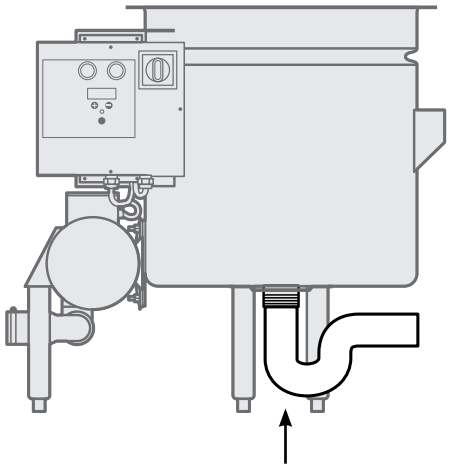

2" Tank Drain
(Piping not furnished)

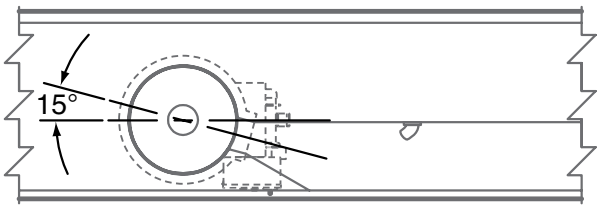


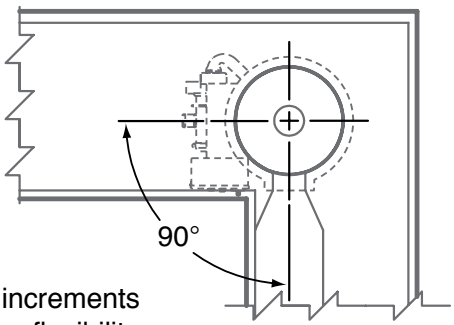


The Trough Collector top can be rotated in 15 degree increments to ease common installations as well as improve design flexibility without the need of costly tank modifications.

# Trough Collector™

## Model S419 Specifications

## CONSTRUCTION

- Tank - 2 Piece Stainless Steel
- Adjustable Legs - Stainless Steel
- Control Panel - Stainless Steel
- Salvage Basin - High Impact Polymer
- Scrap Basket - High Impact Polymer

## ELECTRICAL

- Pre-wired NEMA 4 Control Panel
- Watertight Conduit/Fittings
- Separate Component Grounding
- Thermally Protected Motor
- Safety Line Disconnect
- 24 Volt Safety Circuitry

## PLUMBING

- Corrosion Resistant Components
- Automatic Water Blender
- Unions
- Check Valves
- Incoming Water Valves
- Non-clogging Pump Design
- Pump Intake Screen

## ACCESSORIES

- ☐ Remote Start-Stop
- ☐ Remote Mounting Bracket
- ☐ Correctional Package
- ☐ Control Mounting Bracket
- ☐ Additional Scrap Basket
- ☐ Rack Guide
- ☐ Full Stainless Cover
- ☐ Gusher Heads

## VOLTAGES AVAILABLE

*(SPECIFY EXACT OPERATING VOLTAGE)*

☐ 115V ☐ 208V ☐ 230V, 60 Cycle, 1 Phase

☐ 208V ☐ 230V ☐ 460V, 60 Cycle, 3 Phase

Pump Motor ¾ HP

## FULL LOAD AMPS

*(SPECIFY EXACT OPERATING VOLTAGE)*

| 1 PHASE | | | 3 PHASE | | |
|---|---|---|---|---|---|
| 115V | 208V | 230V | 208V | 230V | 460V |
| 11 | 5.5 | 5.5 | 3.2 | 3 | 1.5 |

## UTILITIES REQUIRED

1. Electric service
2. 3/4" hot and cold water supply and reduce to 1/2" at connection.
3. 2" tank drain.

**(Specifications subject to change without notice.)**

## SAMPLE SPECIFICATIONS

Unit shall be a Salvajor Trough Collector, a complete scrapping, pre-flushing and food waste collecting system with recirculating water as manufactured by Salvajor.

Model S419,____Volts, 60Hz, ___Phase.

Furnished with a pre-wired control panel and stainless steel NEMA 4 watertight enclosure.

SALVAJOR®

Manufacturers of Commercial Food Waste Solutions - *Since 1944*

4530 East 75th Terrace Kansas City, MO 64132-2081, USA

816.363.1030 | Toll Free: 1.800.725.8256 | Service: 1.888.725.8256 | Fax: 1.800.832.9373

sales@salvajor.com | service@salvajor.com | **www.salvajor.com**

Printed in USA
Form No. S419 (05-18)