Salvajor Trough Collector

PARTS BREAKDOWN for Model S419

For Serial Numbers starting at 26606

Model S419 System Components

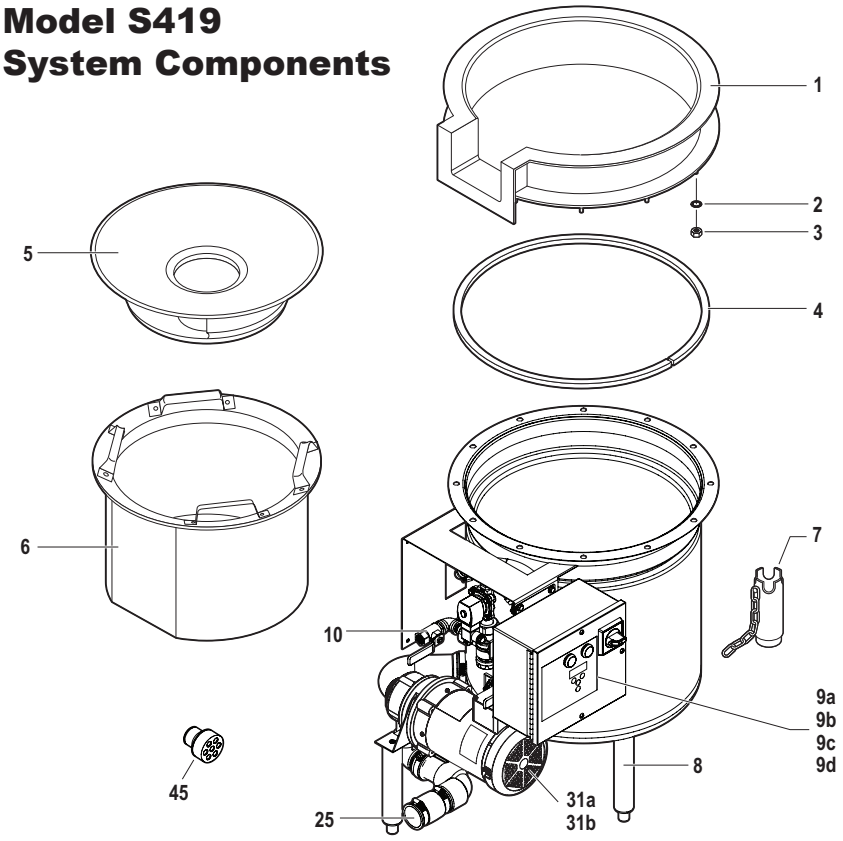

Item #10

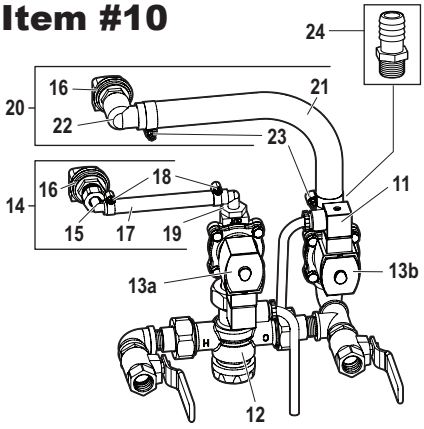

Item #25

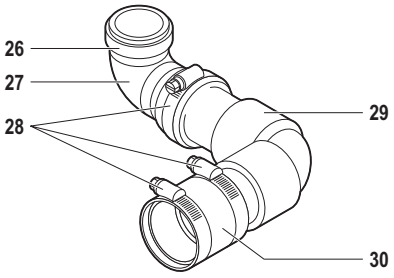

Item #31a
Item #31b *(shown)*

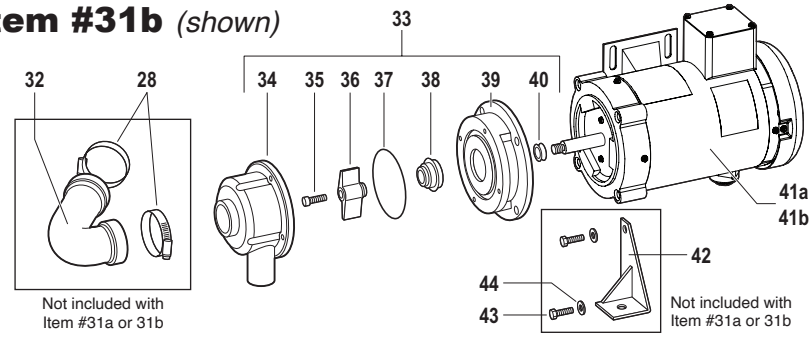

ITEM	PART NO.	DESCRIPTION
1	980169	**S419 Top Assembly**
2	ILW14SS	**Internal Lockwasher 1/4”**
3	1420NSS	**1/4-20 Hex Nut SS**
4	996058	**Top Gasket**
5	992011	**Salvage Basin**
6	992013	**Scrap Basket**
7	988006	**Overflow Pipe Assembly**
8	914LESS	**Stainless Steel Leg**
9a	SS334	**Control Panel 115V 1PH**
9b	SS335	**Control Panel 208-230V 1PH**
9c	SS337	**Control Panel 208-230V 3PH**
9d	SS339	**Control Panel 460V 3PH**
10	980192	**Water Harness 24V Assy** (Includes 11-24)
11	994395	**Din Cord Pigtail**
12	998124	**Water Blender** (Only)
13a	AS8242DIN	**Solenoid Valve Assy 24V** (2 GPM Flow Control)
13b	AS824DIN	**Solenoid Valve Assy 24V** (Unrestricted Quick Fill)
14	980159	**Nozzle Assembly SC/PC/TC** (Includes 15-19)
15	998113	**3/8” Nylon Elbow**
16	2906	**Fixed Nozzle**
17	998022	**3/8” Braided Tubing**
18	997001	**Hose Clamp**
19	998046	**Adaptor 3/8” X 1/2” 90 Deg Hose**
20	980197	**Quick Fill Nozzle Assy** (Includes 16, 21-23)
21	988040	**3/4” Braided Tubing**
22	998136	**Female 1/2” NPT 90 deg 3/4” Barb**
23	997183	**1-1/16” Hose Clamp**
24	998132	**Adaptor 3/4” Barb x 1/2” NPT**
25	988026	**Pump Plumbing Assembly** (Includes 26-30)
26	S24	**Hose Clamp**
27	996019	**Rubber Elbow Discharge**
28	M32	**Hose Clamp**
29	988025	**Elbow Assembly**
30	15X15BR	**Coupling 1-1/2” X 1-1/2”**
31a	980076	**Pump and Motor Assy 1PH** (Includes 34-41)
31b	980077	**Pump and Motor Assy 3PH** (Includes 34-41)
32	996034	**Elbow 125 Degree Rubber** (Sold separately)
33	980074	**Pump Assembly** (Includes 34-40)
34	988010	**Pump Housing**
35	997089	**Cap Screw** (Not used on 1-phase)
36	996027	**Impeller**
37	996028	**O-Ring**
38	ECK511	**Seal Kit**
39	988009	**Pump Base**
40	996030	**V-Ring**
41a	991060	**Pump Motor 1PH**
41b	991061	**Pump Motor 3PH (Shown)**
42	980157	**Leg Bracket** (Sold separately)
43	997061	**Screw 3/8”** (Sold separately)
44	38L	**Lockwasher** (Sold separately)
45	980110	**Pump Intake Screen**

SALVAJOR®

4530 East 75th Terrace Kansas City, MO 64132-2081, USA
Service: 1.888.725.8256 | Fax: 1.800.832.9373
service@salvajor.com | **www.salvajor.com**

Salvajor Model SS33

Automatic Start/Stop with Line Disconnect

PRE-WIRED CONTROL PANEL PARTS BREAKDOWN

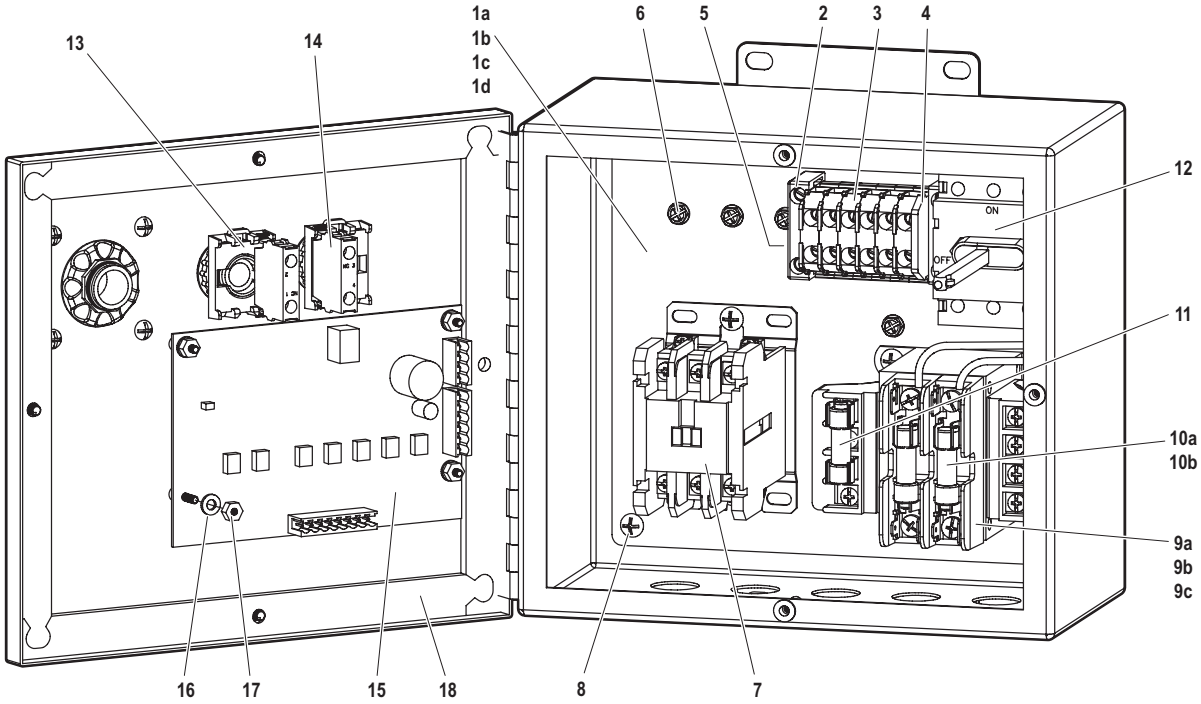

SS33 Item Numbers		
VOLTAGE	**PHASE**	**ITEM NO.**
115	**1**	**SS334**
208 *or* 230	**1**	**SS335**
208 *or* 230	**3**	**SS337**
460	**3**	**SS339**

ITEM	PART NO.	DESCRIPTION
1a	SS334IP	SS33 Inner Panel 115V 1PH
1b	SS335IP	SS33 Inner Panel 208V 1PH
1c	SS337IP	SS33 Inner Panel 208-230V 3PH
1d	SS339IP	SS33 Inner Panel 460V 1PH
2	994294	End Clamp
3	994292	Terminal Block
4	994293	End Barrier
5	994295	Din Rail Mounting Track
6	SCR1032	Ground Screw 10-32
7	994174	Contactor 24V
8	997093	Screw 10-32 X 3/8"
9a	994116A	Transformer Assembly 115V
9b	994115A	Transformer Assembly 208-230V
9c	994115B	Transformer Assembly 460V
10a	994095	Fuse 1 AMP
10b	994122	Fuse .5 AMP
11	994101	Fuse 2 AMP
12	980209	Line Disconnect Assembly (Includes 12a)
12a	984016	Line Disconnect (Handle Only)
13	ABD200A	Button Stop
14	ABD100B	Button Start
15	994392	Solid State Control Panel
16	997161	Flat Washer 6-32
17	997160	Hex Nut 6-32
18	910GA	Gasket Assembly 9 X 10 Box
19	997032	Screw 10-32 X 5/8"
20a	999235	Control Overlay
20b	999258	Control Overlay

10" x 9" Box Assembly

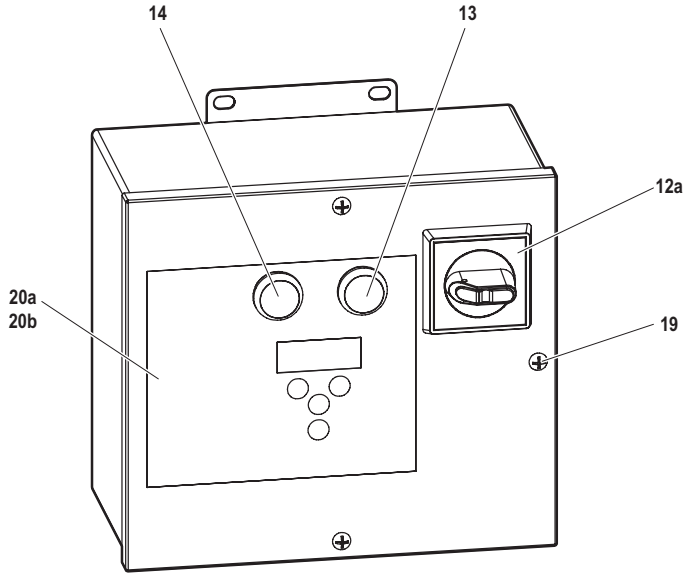

SALVAJOR

4530 East 75th Terrace Kansas City, MO 64132-2081, USA
Service: 1.888.725.8256 | Fax: 1.800.832.9373
service@salvajor.com | **www.salvajor.com**

Printed in USA
Form No. TC/COL 26606 (09-24)