John BOOS
Since 1887

ITEM #: _____ QTY: _____
MODEL #: _____
PROJECT NAME: _____

121917

3601 S. Banker St. Effingham, IL 62401 • P.O. BOX 609 • Ph: (888) 431-2667 • Fax: (800) 433-2667

"DSB" MAPLE TOP WORK TABLES

1-3/4" THICK HARD ROCK MAPLE TOP WITH 4" RISER ON BACK AND SIDES. STAINLESS STEEL BASE & ADJUSTABLE BRACING

FEATURES:

- 1-3/4" THICK HARD MAPLE TOP, STYLE "SB" WITH 4" COVED RISER ON BACK AND SIDES
- MAPLE TOP IS FINISHED WITH PENETRATING OIL WITH OPTIONAL NATURAL CLEAR VARNIQUE FINISH (VARNIQUE FINISH VOIDS NSF.)
- STAINLESS STEEL BASE AND ADJUSTABLE BRACING
- ADJUSTABLE BULLET FEET
- SHIPPED KNOCKED-DOWN, EASY-TO-ASSEMBLE
- NSF CERTIFIED



MATERIAL:

- TOP: NORTHERN HARD ROCK MAPLE
- LEGS: 16 GAUGE STAINLESS STEEL STEEL
- BRACING: 1-1/4" ROUND O.D. 18 GAUGE STAINLESS STEEL
- GUSSETS: STAINLESS STEEL
- FEET: 1" ADJUSTABLE STAINLESS STEEL

OPTIONAL ACCESSORIES

DESCRIPTION	MODEL	QTY
DRAWER		
DRAWER LOCK		
CASTERS		
OVERSHELVES		
POT RACK		



COVED RISER (FRONT VIEW)

MAPLE TOP W/ STAINLESS BASE

24" WIDE	QTY	30" WIDE	QTY	36" WIDE	QTY
DSB01		DSB06		DSB11	
DSB02		DSB07		DSB12	
DSB03		DSB08		DSB13	
DSB03A		DSB08A		DSB13A	
DSB04		DSB09		DSB14	
DSB04A		DSB09A		DSB14A	
DSB05		DSB10		DSB15	

DETAILED SPECIFICATIONS

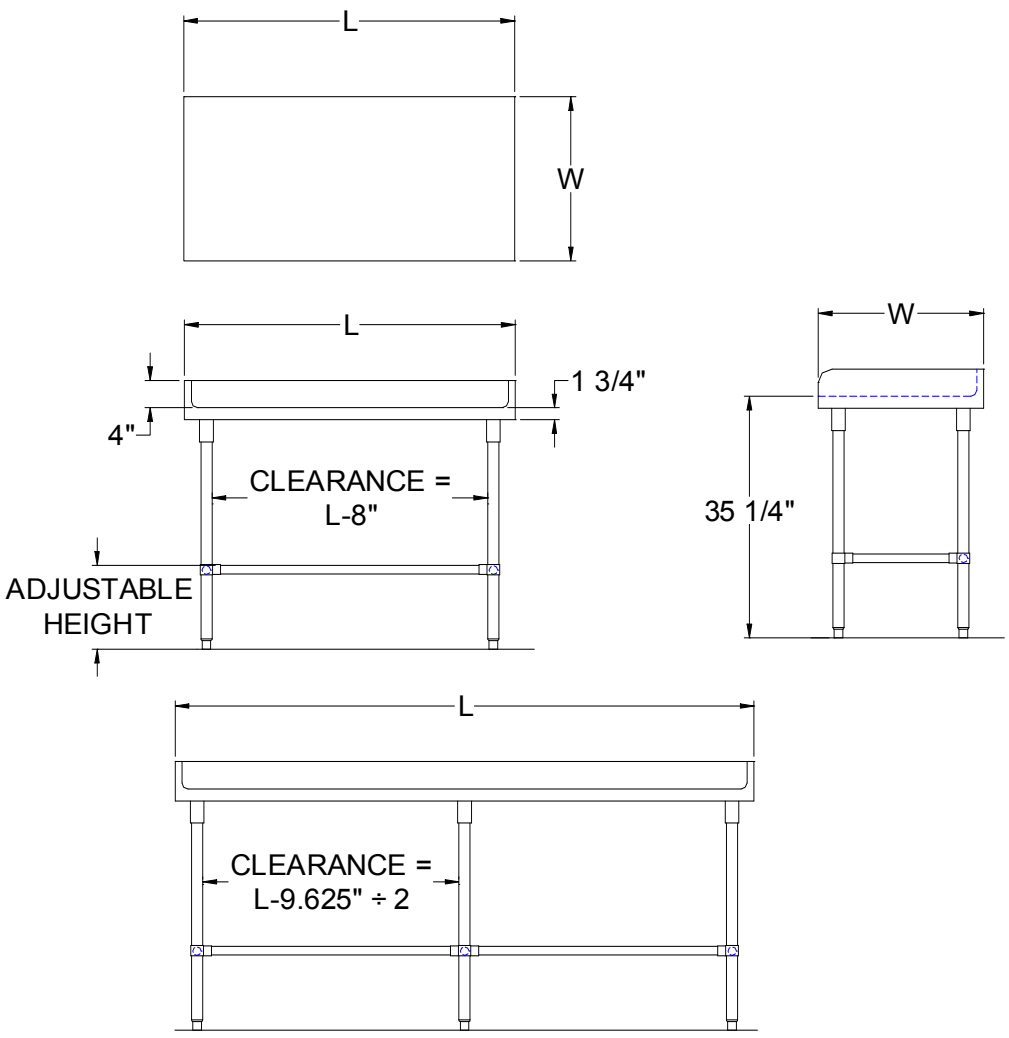

- UNITS 7 FT. AND LARGER ARE FURNISHED WITH SIX LEGS.
- FINISHED SIZE OF UNDERSHELF.
  SHELF LENGTH = LENGTH MINUS 4.875”
  SHELF WIDTH = WIDTH MINUS 4.25”

MAPLE TOP W/ STAINLESS BASE

LENGTH	24" WIDE	WT. (LBS)	30" WIDE	WT. (LBS)	36" WIDE	WT. (LBS)
48"	DSB01	110	DSB06	129	DSB11	148
60"	DSB02	129	DSB07	152	DSB12	175
72"	DSB03	148	DSB08	176	DSB13	202
84"	DSB03A	178	DSB08A	210	DSB13A	240
96"	DSB04	198	DSB09	232	DSB14	266
108"	DSB04A	216	DSB09A	255	DSB14A	293
120"	DSB05	236	DSB10	279	DSB15	321

SOME UNITS SHIP UNASSEMBLED FOR REDUCED SHIPPING COST. ALL DIMENSIONS ARE TYPICAL. TOLERANCE +/- .500"

John Boos & Co. is constantly engaged in a program of improving products and therefore reserves the right to change specifications without prior notice.