ATTG-48(NG/LP)

REV.2025.06

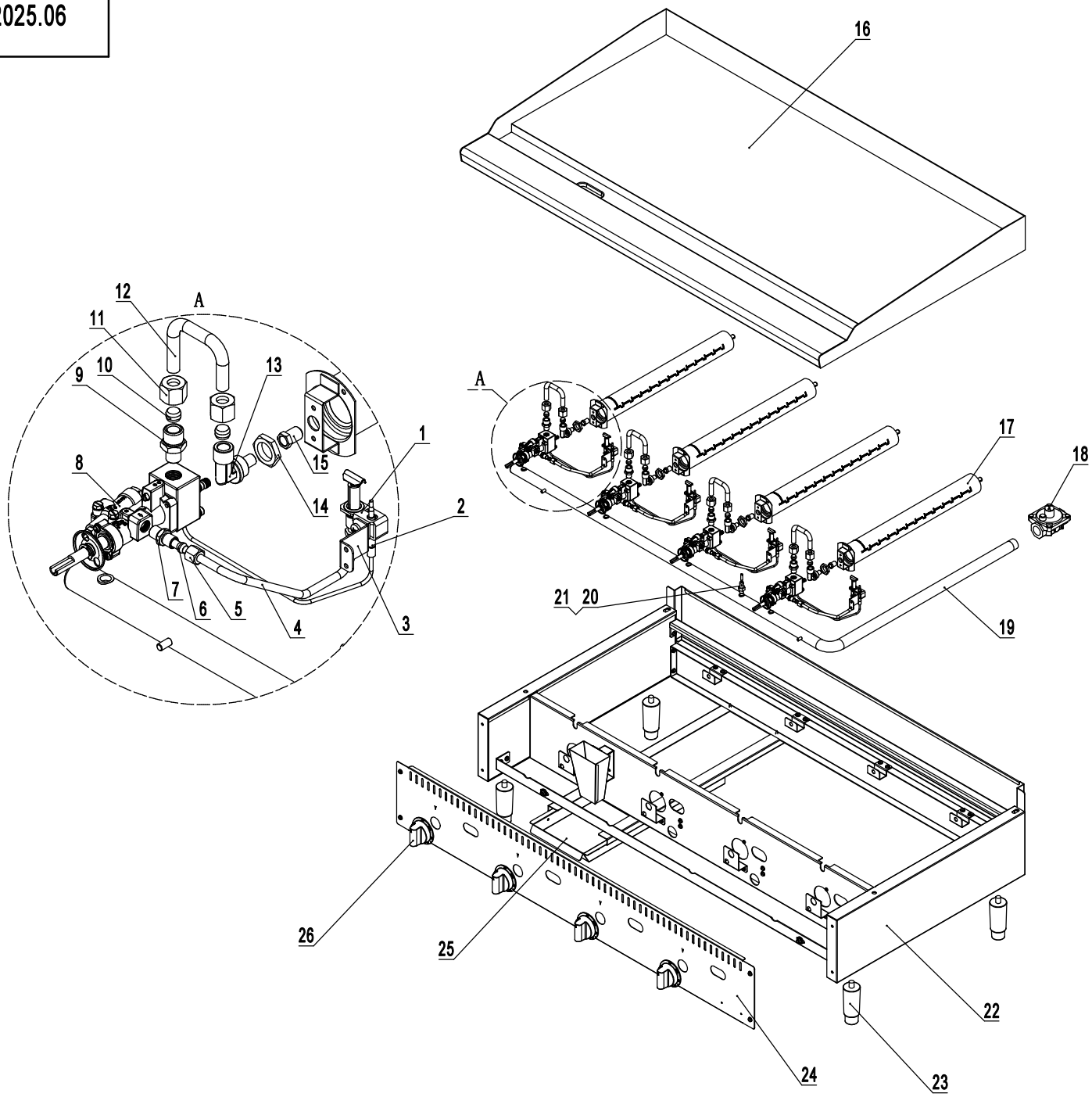

NO.	Part#	Part Name	Qty
26	R06021000013	Control Knob	4
25	G020101100016430	Catch Tray	1
24	G020601100005430	Control Panel	1
23	R06001000085	Adjustable Leg	4
22	G020601200040	Fire Box	1
21	R06015000016	Needle Valve Pressure Fitting	1
20	R06015000015	Needle Valve	1
19	R06016000059	Intake Tube	1
18	R16007000002	Regulator	1
17	R16001000010	Burner	4
16	G020601200010	Countertop	1
15	R06012000046	NG Orifice #42	4
14	R06015000072	Brass Nut	4
13	R06015000000	Male Copper Elbow	4
12	R06013000017	Main Intake Pipe	4
11	R06015000071	Top Brass Nut	8
10	R06010000165	Top Brass Clamp	8
9	R06015000027	Top Brass Connector	4
8	R16002000018	Thermostat	4
7	R06015000066	Brass Connector	4
6	R06010000168	Brass Clamp	4
5	R06015000029	Brass nut	4
4	R06013000018	Pilot Input Tube	4
3	G020401100011430	Pilot Assembly Bracket	4
2	R16005000006	Thermocouple	4
1	R16006000008	Pilot Assembly(LP)	4
1	R16006000007	Pilot Assembly(NG)	4