ATTG-24(NG/LP)

REV.2025.06

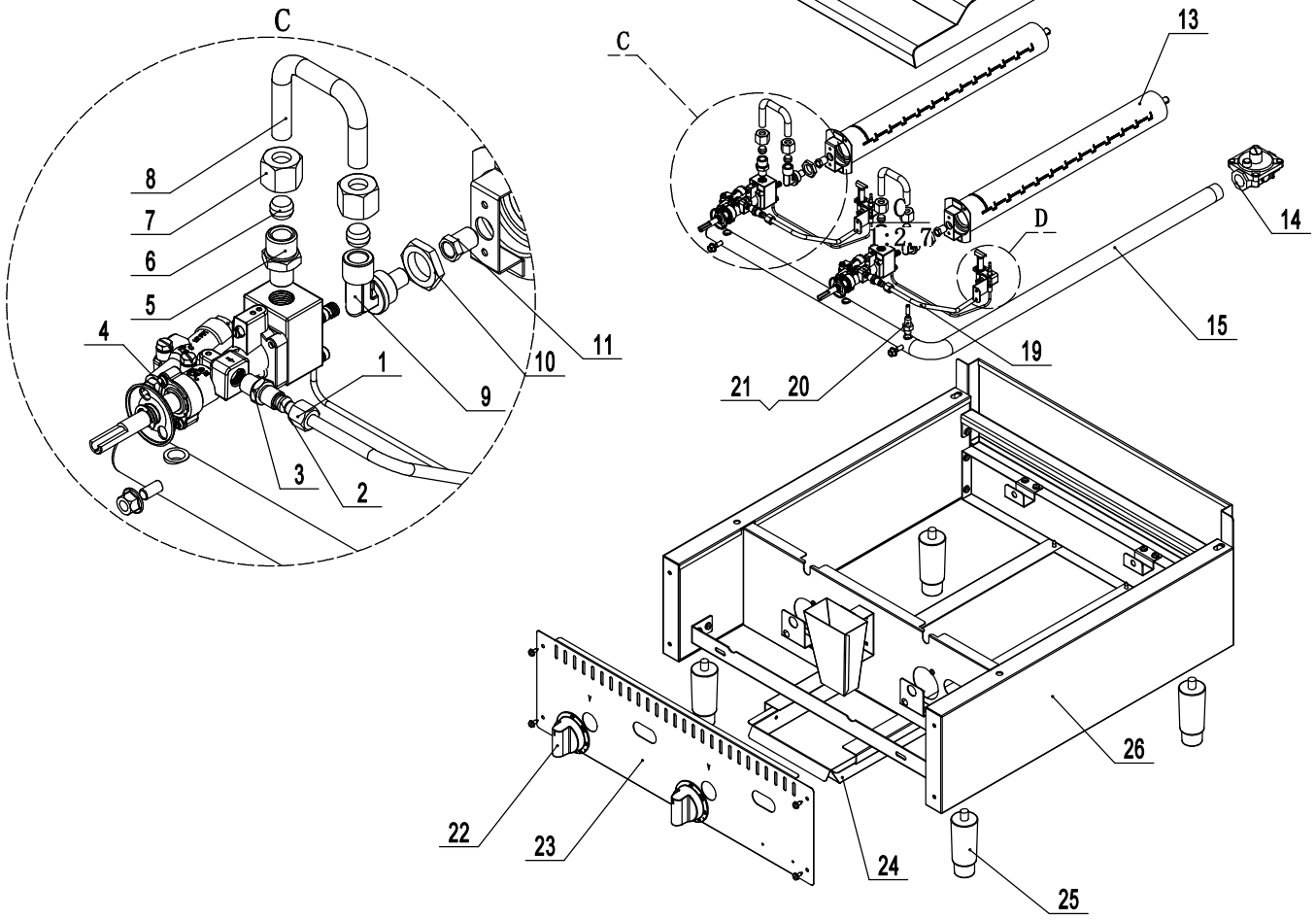

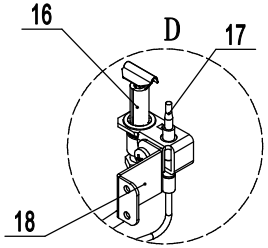

NO.	Part#	Part Name	Qty
26	G020401200060	Fire Box	1
25	R06001000085	Adjustable Leg	4
24	G020101100016430	Catch Tray	1
23	G020401100010430	Control Panel	1
22	R06021000013	Control Knob	2
21	R06015000016	Needle Valve Pressure Fitting	1
20	R06015000015	Needle Valve	1
19	R06013000018	Pilot Input Tube	2
18	G020401100011430	Pilot Assembly Bracket	2
17	R16005000006	Thermocouple	2
16	R16006000008	Pilot Assembly(LP)	2
16	R16006000007	Pilot Assembly(NG)	1
15	R06016000057	Intake Tube	1
14	R16007000002	Regulator	1
13	R16001000010	Burner	2
12	G020401200010	Countertop	1
11	R06012000046	NG Orifice #42	2
11	R06012000003	LP Orifice #53	2
10	R06015000072	Brass Nut	2
9	R06015000000	Male Copper Elbow	2
8	R06013000017	Main Intake Pipe	2
7	R06015000071	Top Brass Nut	4
6	R06010000165	Top Brass Clamp	4
5	R06015000027	Brass Coupling	2
4	R16002000018	Thermostat	2
3	R06015000066	Brass Connector	2
2	R06010000168	Brass Clamp	2
1	R06015000029	Brass nut	2