Black Stamped Steel Table Base

- Constructed of stamped steel for unparalleled strength & stability
  - Superior to cast iron table bases in that stamped steel will not fracture under heavier weights
- Easy two-piece labor saver design for quick assembly or three-piece assembly (tube/spider to base) for reduced shipping costs
  - Oak Street uses a short bolt to screw into a welded anchor plate - a much improved method than competitors, which use a long rod that will torque & stretch when force is applied - making it permanently loose
- Spider is attached to the tube using the 2 short bolts welded onto the tube
  - Spider dimensions: 11" x 11" - 15" diagonally
  - Oak Street's spiders are bigger than most competitor's spiders - providing additional strength & durability
- Standard height finishes at 30" with table top attached; Bar height finishes at 42" with table top attached

NEW DESIGN!



Pneumatic adjustment from 26" - 41.5". Adjustment lever mounts to underside of table top. Black finish. 27.5" x 27.5" cross foot with adjustable glides. 30" x 30" or 30" round max size for 1 base. 30" x 48", 60", 72"+ require two bases. 36" x 36" or 36" round may require help lifting.

B27-ADJ

Description	Part #	Weight
22" x 22" cross base with 3" standard height tube	B22-STD	16 lbs
22" x 22" cross base with 3" counter height tube	B22-CTR	17 lbs
22" x 22" cross base with 3" bar height tube	B22-BAR	17 lbs
22" x 22" cross base with 4" standard height tube	B22-4-STD	20 lbs
22" x 22" cross base with 4" bar height tube	B22-4-BAR	24 lbs
22" x 30" cross base with 3" standard height tube	B2230-STD	23 lbs
22" x 30" cross base with 3" counter height tube	B2230-CTR	24 lbs
22" x 30" cross base with 3" bar height tube	B2230-BAR	24 lbs
22" x 30" cross base with 4" standard height tube	B2230-4-STD	24 lbs
22" x 30" cross base with 4" bar height tube	B2230-4-BAR	25 lbs
27.5" x 27.5" cross base with adjustable height tube	B27-ADJ	18 lbs
25.625" t-bases with adjustable height tubes	B2543-ADJ	46 lbs
30" x 30" cross base with 3" standard height tube	B30-STD	24 lbs
30" x 30" cross base with 3" counter height tube	B30-CTR	25 lbs
30" x 30" cross base with 3" bar height tube	B30-BAR	25 lbs
30" x 30" cross base with 4" standard height tube	B30-4-STD	25 lbs
30" x 30" cross base with 4" bar height tube	B30-4-BAR	26 lbs
36" x 36" cross base with 4" standard height tube	B36-4-STD	30 lbs
36" x 36" cross base with 4" bar height tube	B36-4-BAR	32 lbs
40" x 40" cross base with 4" standard height tube	B40-4-STD	35 lbs
40" x 40" cross base with 4" bar height tube	B40-4-BAR	37 lbs
22" t-base with 3" standard height tube	B522-STD	16 lbs
22" t-base with 3" ADA standard height tube	B522-ADA	17 lbs
22" t-base with 3" counter height tube	B522-CTR	17 lbs
22" t-base with 3" bar height tube	B522-BAR	17 lbs
22" t-base with 4" standard height tube	B522-4-STD	18 lbs
22" t-base with 4" bar height tube	B522-4-BAR	21 lbs
30" t-base with 4" standard height tube	B530-4-STD	24 lbs
30" t-base with 4" bar height tube	B530-4-BAR	25 lbs
18" disc base with 3" standard height tube	B18DISC-STD	27 lbs
18" disc base with 3" counter height tube	B18DISC-CTR	28 lbs
18" disc base with 3" bar height tube	B18DISC-BAR	28 lbs
18" disc base with 4" standard height tube	B18DISC-4-STD	29 lbs
18" disc base with 4" bar height tube	B18DISC-4-BAR	30 lbs
22" disc base with 3" standard height tube	B22DISC-STD	38 lbs
22" disc base with 3" counter height tube	B22DISC-CTR	39 lbs
22" disc base with 3" bar height tube	B22DISC-BAR	39 lbs
22" disc base with 4" standard height tube	B22DISC-4-STD	40 lbs
22" disc base with 4" bar height tube	B22DISC-4-BAR	41 lbs
30" disc base with 4" standard height tube	B30DISC-4-STD	66 lbs
30" disc base with 4" bar height tube	B30DISC-4-BAR	68 lbs

NEW DESIGN!



B2543-ADJ

Pneumatic adjustment from 26" - 41.5". Adjustment lever mounts to underside of table top. Black finish. 2 x 25.625" t bases with 39" gap from outside to outside of legs (32.75" inside). ADA compliant. Designed for 30" x 48" table tops.

ADA bases feature a modified spider to allow placement of bases closer to table edges - achieving ADA compliance on 30" x 48" tables.



Self-Leveling Base Glides
Part #: BL522-SL

Automatically stabilize, balance & level - eliminating wobbly, uneven tables!



Suggested base applications shown on pg. 38 - 39

ADA Rules & Guidelines

OAK STREET MANUFACTURING
SUPERIOR RESTAURANT FURNISHINGS

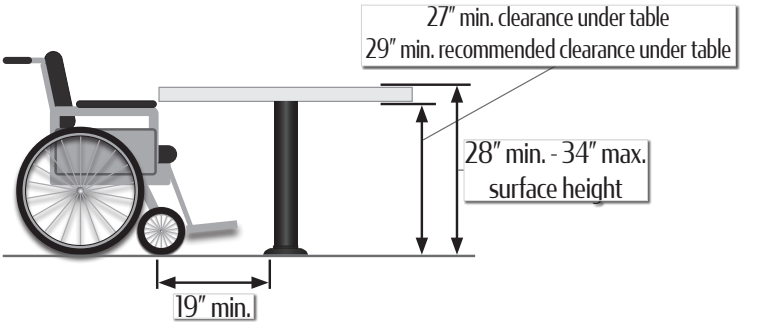

The Americans with Disabilities Act is a Federal civil rights law that prohibits the exclusion of people with disabilities from everyday activities, such as enjoying a meal at a restaurant.

Establishment Requirements

- 5% of all tables (dining, banquet and bar),or at least 1 (if less than 20 tables), must be wheelchair accessible. *NOTE: If you have a bar or outdoor area in your restaurant, it must be counted separately, in the same way.*
- If it is not readily achievable to provide the minimal number of accessible tables in all areas where fixed tables are provided, then services must be provided in another accessible location. *NOTE: Alternative locations must be available for all customers and not just people with disabilities. It is illegal to segregate people with disabilities in one area by designating it as an accessible area to be used only by people with disabilities.*

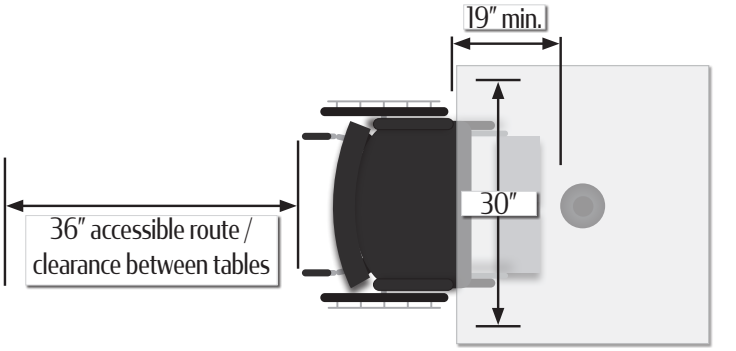

ADA complaint tables must meet the following criteria:

- A surface hight of no less than 28″ and no more than 34″ above the floor.
- A minimum knee clearance of 27″ (preferred knee clearance is 29″ to accommodate larger electric wheel-chairs) between the floor and the underside of the table.
- A clear floor area of 30″ x 48″ is provided at each accessible seating location.
- Knee clearance extends at least 19″ under the table.

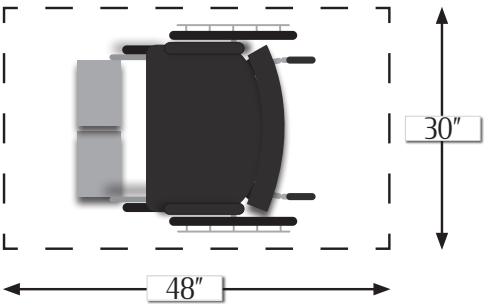

Oak Street Manufacturing has a variety of high-quality table base options to ensure your ADA compliance.
Bolt down table bases, cantilever wall mount table bases and T-bases are the best options.
These table bases offer a small footprint and allow you to meet ADA compliance without using excessively large table tops.

Bolt down table bases work well when you don't want to have a table against a wall and want the flexibility to switch between using chairs or making space for wheelchair accessibility.

Bolt down table bases have a small plate welded to the bottom of the tube, which is anchored to the floor and covered with a small dust cover. Bolt down bases have a footprint of approximately 8″ - 11″ in diameter.

NOTE: Bolt down bases shouldn't be spaced more than 36″ apart.

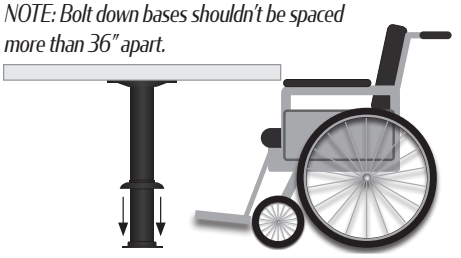



Cantilever wall mount table bases are a great option because they use little to no floor space (depending on the size).

Our **21″ Cantilever wall mount table base (Part No.: CANTILEVER-21)** accommodates table sizes up to 30".

Our **27.5″ Cantilever wall mount table base* (Part No.: CANTILEVER-27.5)** accommodates table sizes 30″ to 48" without the use of a pin leg or 48"+, but requires installing a pin leg (SSB-PIN).

* - *Requires special wall construction.*

T-Bases use little space and are simple to install. Our T-Bases are constructed of stamped steel for unparalleled strength and stability.

IMPORTANT: Ensure your table size can accommodate a minimum floor space of 30″ between the two T-Bases to maintain ADA compliance.

ADA compliant 5″ x 22″ T-Bases available with 3″ ADA standard height tube **(Part No.: B522-ADA)**.

