# CATALOG OF REPLACEMENT PARTS

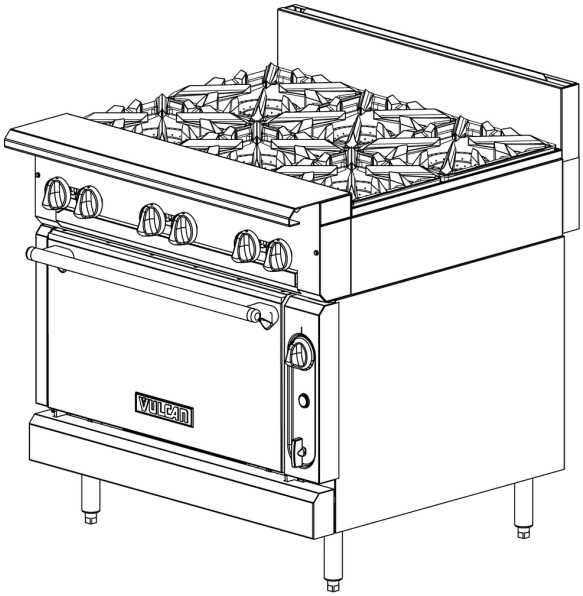


V6B36S Shown

## V SERIES HDR GAS RANGES

**TOPS**

**Open Top**
**Hot Top**
**Griddle Top**
**Work Surface**

**BASES**

**Standard Oven**
**Convection Oven**
**Cabinet Base**

***Add "B" for Cabinet Base.**

***Add "S" for Standard Oven Base on 36" Models.**

***Add "C" for Convection Oven Base on 36" Models.**

**VULCAN-HART DIVISION OF ITW FOOD EQUIPMENT GROUP, LLC 3600 NORTH POINT BLVD., BALTIMORE, MD 21222**

**FORM 37419 Rev. H (February 2024)**

 © VULCAN-HART COMPANY 2024

## Table of Contents


5 12/24/36 IN OPEN TOP BURNER
7 B MODEL 12/18/24/34 IN CABINET BASE
9 S MODEL OVEN
11 S MODEL GAS MANIFOLD ASSY
13 C MODEL OVEN
15 C MODEL GAS MANIFOLD ASSY
17 36 IN - 4 & 18 IN - 2 OPEN TOP BURNER
19 24/36 IN CHAR BROILER
21 18/36 IN FRENCH TOP RADIAL FIN HOT TOP
23 18/24/36 IN THERMO CONTROL GRIDDLE TOP
25 18/24/36 IN MANUAL CONTROL GRIDDLE TOP
27 12/18/24/36 IN WORK TOP
29 18/36 IN STEP UP OPEN TOP BURNER
31 36 IN 6 OPEN TOP STEP UP BURNER
33 STEP UP BURNER ASSEMBLY

| | | |
|---|---|---|
| 45 | 00-497994-00001 | Cap - End (RH) |
| 46 | 00-499803-00001 | Cap - End (LH) |
| 47 | 00-957067-000G1 | Riser - Stub 36” |
| 48 | 00-957066-000G1 | Riser - Stub 24” |
| 49 | 00-957064-000G1 | Riser - Stub 12” |
| 50 | 00-404060-00001 | Mixer - Air |

**PARTS NOT ILLUSTRATED**

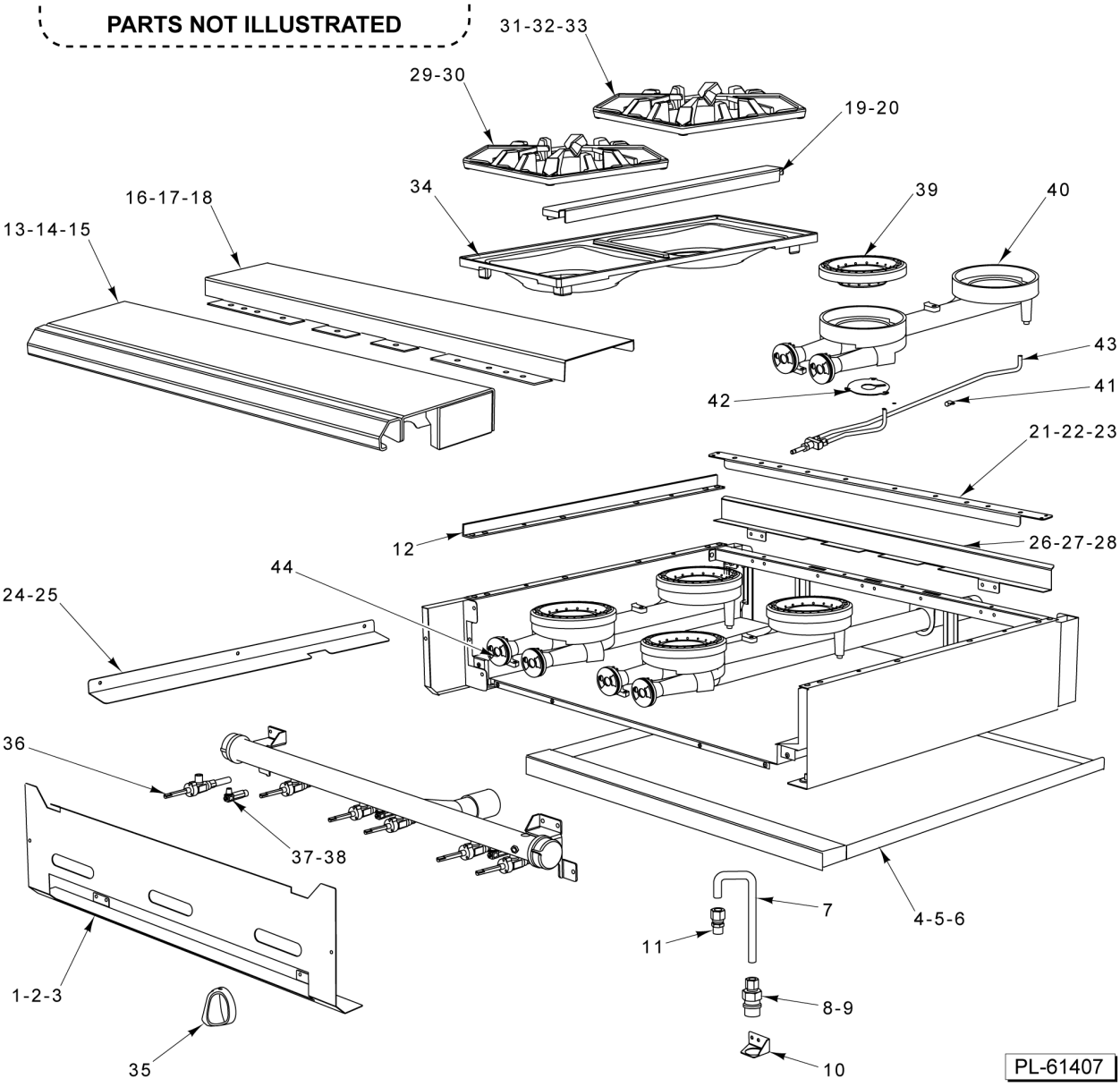


## 12/24/36 IN OPEN TOP BURNER

# 12/24/36 IN OPEN TOP BURNER

| ILLUS. PL-61407 | PART NO. | NAME OF PART | AMT. |
|---|---|---|---|
| 1 | 00-957575-00002 | Cover - Manifold 36" (6 Open Top Burner) | 1 |
| 2 | 00-957570-00001 | Cover Manifold 24" (4 Open Top Burner) | 1 |
| *3 | 00-957559-00001 | Cover - Manifold 12" (2 Open Top Burner) | 1 |
| 4 | 00-499006-000G2 | Tray - Crumb (SST) 36" (6 Open Top Burner) | 1 |
| 5 | 00-956724-000G2 | Tray - Crumb (SST) 24" (4 Open Top Burner) | 1 |
| 6 | 00-499969-000G2 | Tray - Crumb (SST) 12" (2 Open Top Burner) | 1 |
| 7 | 00-426509-00010 | Tube - Flex 1/2" O.D. 10" Lg. | 1 |
| 8 | 00-426509-00010 | Tube - Flex 1/2" O.D. 10" Lg. | 1 |
| 9 | FP-012-02 | Fitting - Tube 1/2 TBG X 3/8 MPT | 1 |
| 10 | 00-499047-00001 | Bracket - Disconnect | 1 |
| 11 | FP-012-02 | Fitting - Tube 1/2 TBG X 3/8 MPT | 1 |
| 12 | 00-497984-00001 | Retainer - Grate | 2 |
| 13 | 00-957236-000G1 | Front Top Assy. 36" (6 Open Top Burner) | 1 |
| 14 | 00-956705-000G1 | Front Top Assy. 24" (4 Open Top Burner) | 1 |
| 15 | 00-499966-000G1 | Front Top Assy. 12" (2 Open Top Burner) | 1 |
| *16 | 00-957235-000G1 | Front Top Assy - Condiment Rail 36" (6 Open Top Burner) | 1 |
| 17 | 00-957239-000G1 | Front Top Slide Rail Assy. 36" (6 Open Top Burner) | 1 |
| 18 | 00-957357-000G1 | Front Top Assy. - Condiment Rail 24" (4 Open Top Burner) | 1 |
| 19 | 00-499493-00001 | Support - Grate (Alum.) | 1 |
| 20 | 00-499493-00002 | Support - Grate (SST) | 1 |
| 21 | 00-499001-00002 | Support - HD Burner (SST) 36" (6 Open Top Burner) | 1 |
| 22 | 00-956718-00002 | Support - HD Burner (SST) 24" (4 Open Top Burner) | 1 |
| 23 | 00-499965-00002 | Support - HD Burner (SST) 12" (2 Open Top Burner) | 1 |
| 24 | 00-499002-00003 | Deflector - HD Splash L.H. (SST) | 1 |
| 25 | 00-499002-00004 | Deflector - HD Splash R.H. (SST) | 1 |
| 26 | 00-499615-00002 | Deflector - Rear (SST) 36" (6 Open Top Burner) | 1 |
| 27 | 00-956725-00002 | Deflector - Rear (SST) 24" (4 Open Top Burner) | 1 |
| 28 | 00-499935-00001 | Deflector - Rear (SST) 12" (2 Open Top Burner) | AR |
| 29 | 00-959325-00001 | Grate - Front 12 In (New Construction) | AR |
| 30 | 00-959325-00001 | Grate - Front 12 In (Previous Construction) | AR |
| 31 | 00-959325-00002 | Grate - Rear 12 In (New Construction) | AR |
| 32 | 00-957369-00001 | Grate - Rear 12" (Before S/N 481808643) | AR |
| 33 | 00-959325-00002 | Grate - Rear 12 In (Starting S/N 481808643) | 1 |
| 34 | 00-957341-00001 | Bowl - Rear 12" Double (Previous Construction) | AR |
| 35 | 00-499712-00001 | Knob - HD Burner | AR |
| **36 | 00-957367-00001 | Valve - Burner Does not include orifice spud | AR |
| 37 | 00-959108-000G1 | Pilot - Kit Open Top Burners (Standard Burners) | AR |
| 38 | 00-959108-000G2 | Pilot Assy. - Step Up (Step Up Burners) | AR |
| 39 | 00-957343-00002 | Burner - Head 6" | AR |
| 40 | 00-957342-00001 | Venturi Assy | AR |
| 41 | 00-402558-00004 | Clip - Tubing | AR |
| 42 | 00-958073-00002 | Plate - Restrictor | AR |
| 43 | 00-959108-000G1 | Pilot - Kit Open Top Burners | AR |
| 44 | 00-404060-00001 | Mixer - Air | AR |
| 45 | 00-497994-00001 | Cap - End (RH) | 1 |
| 46 | 00-499803-00002 | Cap - End (LH) | 1 |
| 47 | 00-957067-000G1 | Riser - Stub 36" W/Alum. Back 36" (6 Open Top Burner) | 1 |
| 48 | 00-957066-000G1 | Riser - Stub 24" W/Alum. Back 24" (4 Open Top Burner) | 1 |
| 49 | 00-957064-000G1 | Riser - Stub 12" W/Alum. Back 12" (2 Open Top Burner) | 1 |
| 50 | 00-404060-00001 | Mixer - Air | 1 |
| 51 | 00-010901-00042 | Orifice - Spud (Nat. Gas) FOR SEA LEVEL TO 2499' | AR |
| 52 | 00-010901-00052 | Orifice - Spud (LP Gas) FOR SEA LEVEL TO 2499' | AR |

* No Longer Available
** Must Order Orifice Spud Separately Item 51 for Natural and Item 52 for Propane .

| | | |
|---|---|---|
| 8 | 00-959619-000G1 | Hinge Assy. (Upper) |
| 9 | 00-959619-000G2 | Hinge Assy. (Lower) |
| 10 | 00-497001-00001 | Caster W/O Brake |
| 11 | 00-497001-00002 | Caster W/ Brake |
| 12 | 00-958094-00001 | Caster W/O Brake |
| 13 | 00-958094-00002 | Caster W/ Brake |

**PARTS NOT ILLUSTRATED**

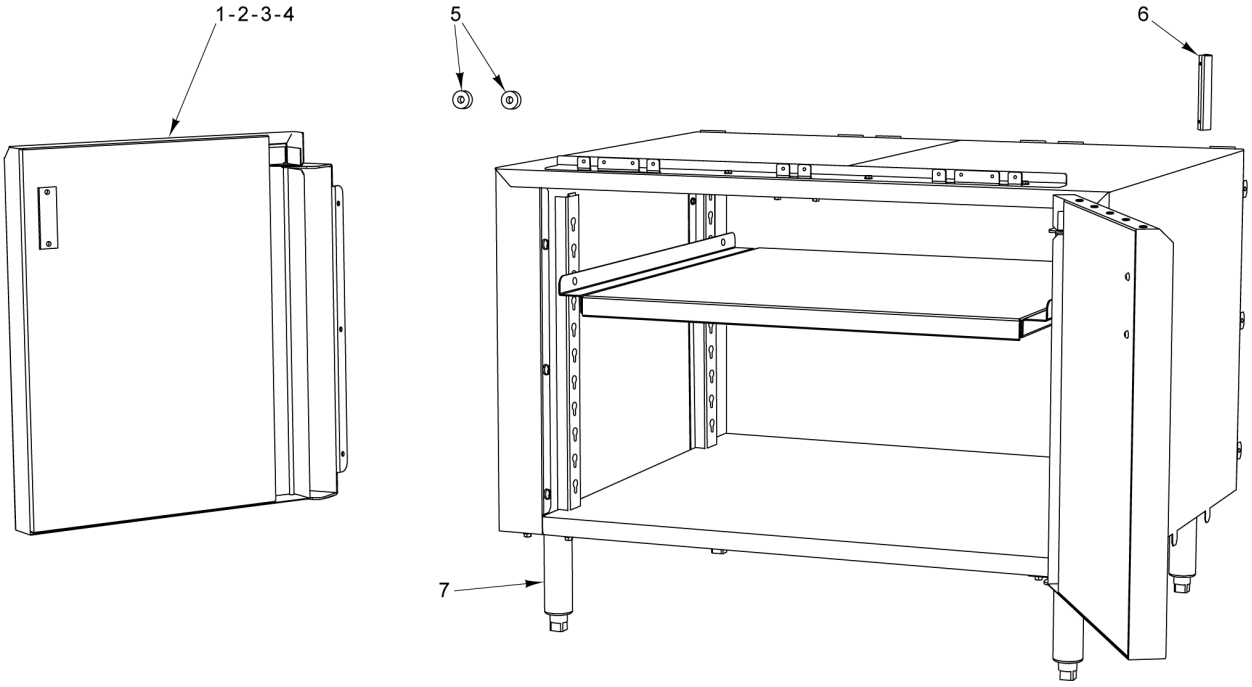


PL-61402

## B MODEL 12/18/24/34 IN CABINET BASE

## B MODEL 12/18/24/34 IN CABINET BASE

| ILLUS. PL-61402 | PART NO. | NAME OF PART | AMT. |
|---|---|---|---|
| 1 | 00-959615-000G4 | Door Assy. (LH) (12 In.) | 1 |
| 2 | 00-959615-000G3 | Door Assy. (RH) (12 In.) | 1 |
| 3 | 00-959615-000G2 | Door Assy. (LH) (18 In.) | 1 |
| 4 | 00-959615-000G1 | Door Assy. (RH) (18 In.) | 1 |
| 5 | 00-497296-000G1 | Magnet Assy | 2 |
| 6 | 00-959632-00001 | Handle - Door Handle - Door Keeler R3122 | 2 |
| 7 | 00-413112-00012 | Leg - Plate Mount (6 In.) | 4 |
| 8 | 00-959619-000G1 | Hinge Assy. (Upper) | AR |
| 9 | 00-959619-000G2 | Hinge Assy. (Lower) | AR |
| 10 | 00-497001-00001 | Caster W/O Brake (5 In.) | 4 |
| 11 | 00-497001-00002 | Caster W/ Brake, Swivel (5 In.) | 4 |
| 12 | 00-958094-00001 | Caster W/O Brake (6 In.) | 4 |
| 13 | 00-958094-00002 | Caster W/ Brake (6 In.) | 4 |

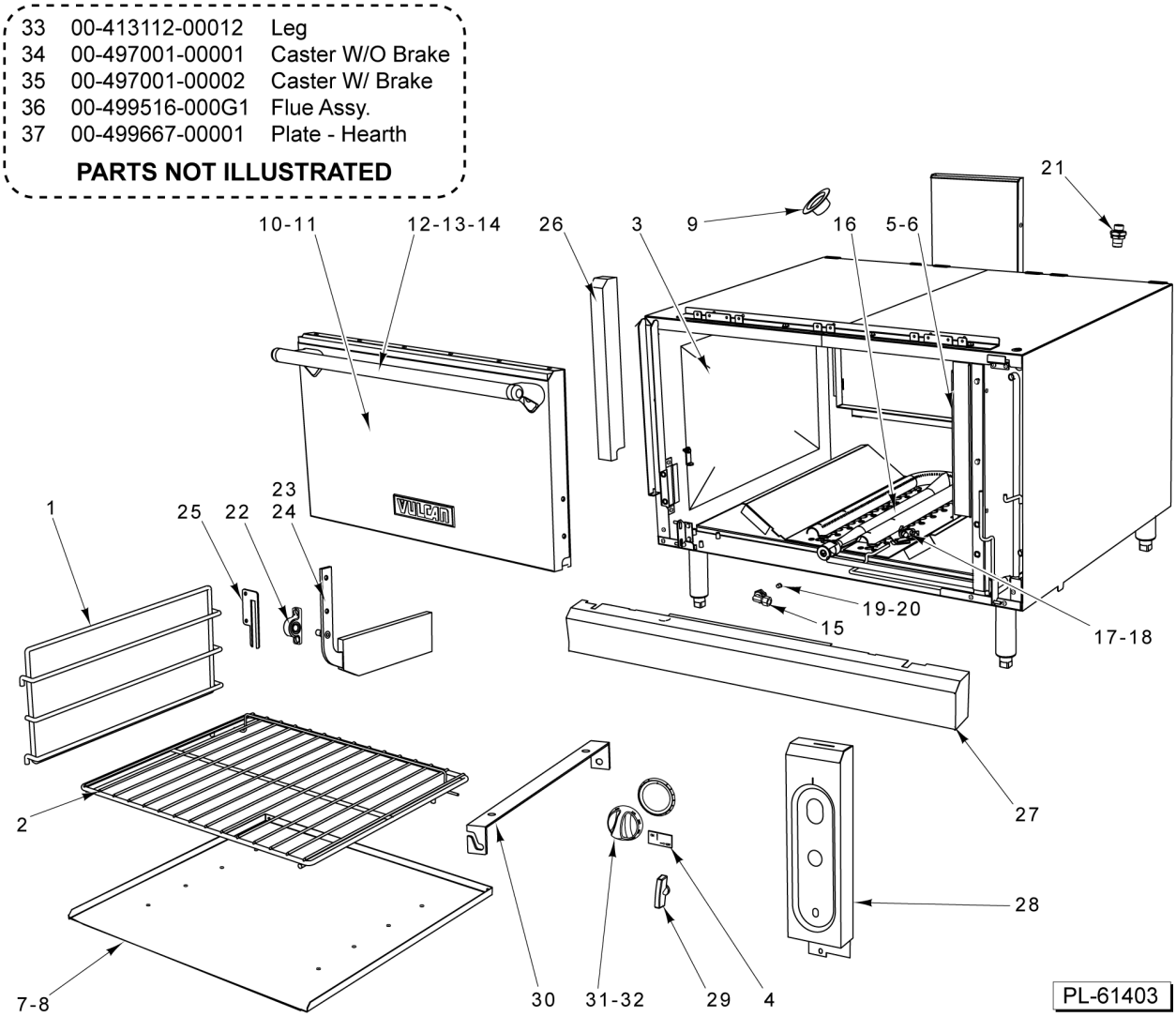
33 00-413112-00012 Leg
34 00-497001-00001 Caster W/O Brake
35 00-497001-00002 Caster W/ Brake
36 00-499516-000G1 Flue Assy.
37 00-499667-00001 Plate - Hearth
PARTS NOT ILLUSTRATED
10-11
12-13-14
26
3
9
16
5-6
21
1
25
22
23
24
19-20
15
17-18
2
27
28
7-8
30
31-32
29
4
PL-61403

## S MODEL OVEN

## S MODEL OVEN

| ILLUS. PL-61403 | PART NO. | NAME OF PART | AMT. |
|---|---|---|---|
| 1 | 00-499468-00001 | Support - Wire Rack | 2 |
| 2 | 00-499517-00002 | Rack, Oven | 1 |
| 3 | 00-499467-00001 | Oven - Side Liner R/H (Porcelain) | 1 |
| 4 | 00-414708-00001 | Plate - On-Off | 1 |
| 5 | 00-499467-00002 | Oven - Side Liner L/H (Porcelain) | 1 |
| 6 | 00-499467-00004 | Oven - Side Liner L/H (SST) | 1 |
| *7 | 00-499800-000G1 | Bottom Liner (Porcelain) | 1 |
| 8 | 00-499800-000G2 | Bottom Liner (SST) | 1 |
| *9 | 00-405930-00001 | Eyelet - Brass | 1 |
| 10 | 00-499513-000G3 | Door W/O Handle | 1 |
| 11 | 00-499513-000G4 | Door W/O Handle (SST) | 1 |
| 12 | 00-956635-00001 | Handle - Oven Door | 1 |
| 13 | SD-032-07 | Self-Tapping Screw 10-24 x 1/2 Hex. Hex Washer Hd., Type TT | 2 |
| 14 | NS-047-70 | Lock Nut 10-24 Hex | 2 |
| 15 | 00-404079-0000F | Nozzle, 90 Deg. Burner | 1 |
| 16 | 00-497891-00001 | Burner - Oven | 1 |
| 17 | 00-412787-00001 | Pilot - Oven (NAT) | 1 |
| 18 | 00-412787-0002 | Pilot - Oven (LP) | 1 |
| 19 | 00-010901-00031 | Orifice - Spud (31 Drill) (Sea Level - 2499 Ft.)(NAT) | 1 |
| 20 | 00-010901-00047 | Orifice - Spud (47 Drill) (Sea Level - 2499 Ft.) (LP) | 1 |
| 21 | 00-499554-00001 | Disconnect - Main Male Q | 1 |
| 22 | 00-497906-00001 | Bearing - Pillow Block | 2 |
| 23 | 00-499512-000G3 | Counterweight - Oven L.H. | 1 |
| 24 | 00-499512-000G4 | Counterweight - Oven R.H. | 1 |
| 25 | 00-499452-00001 | Coverplate | 1 |
| 26 | 00-958353-00001 | Cover - Moulian Panel | 1 |
| 27 | 00-958470-000G1 | Kick Panel | 1 |
| 28 | 00-499507-00001 | Panel - Oven Control | 1 |
| 29 | 00-413157-00001 | Knob - Shut Off | 1 |
| 30 | 00-497883-00001 | Bracket - Themostat Bulb | 1 |
| 31 | 00-961928-00550 | Knob - Oven 550 Deg. F | 1 |
| 32 | 00-961928-00650 | Knob - Oven 650 Deg. F | 1 |
| 33 | 00-413112-00012 | Leg - Plate Mount (6 In.) | 4 |
| 34 | 00-497001-00001 | Caster W/O Brake (5 In.) | AR |
| 35 | 00-497001-00002 | Caster W/ Brake, Swivel (5 In.) | AR |
| 36 | 00-499516-000G1 | Flue Assy | 1 |
| 37 | 00-499667-00001 | Plate - Hearth | 1 |

* No Longer Available

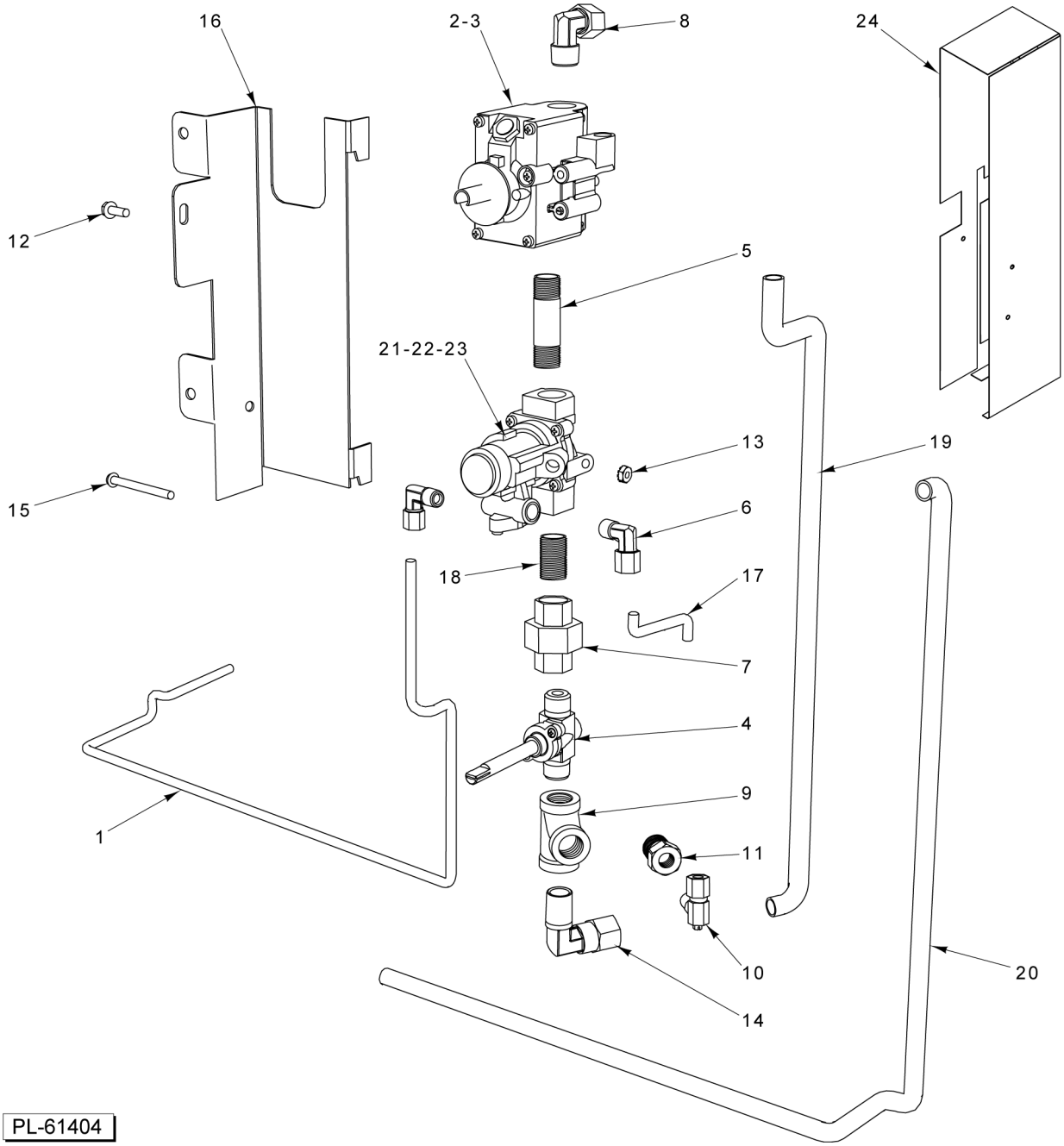


**S MODEL GAS MANIFOLD ASSY**

## S MODEL GAS MANIFOLD ASSY

| ILLUS. PL-61404 | PART NO. | NAME OF PART | AMT. |
|---|---|---|---|
| 1 | 00-426505-00036 | Tube - Flex 1/4" O.D. 36" Lg. | 1 |
| 2 | 00-407522-00007 | Thermostat - 550 Deg. F. | 1 |
| 3 | 00-958754-000G1 | Kit - Thermostat 400-650 Deg. F. | 1 |
| 4 | 00-719971 | Valve - Gas Manual Shut-Off. | 1 |
| 5 | FP-035-54 | Pipe - 3/8 X 2.250 (BLKSTL) (TBE). | 1 |
| 6 | FP-012-21 | Elbow 90 Deg. (1/8 Male Pipe x 1/4 Tube). | 2 |
| 7 | 00-719032 | Union. | 1 |
| 8 | FP-085-68 | Fitting- Elbow (7/16 TBG X 3/8 MPT). | 1 |
| 9 | FP-019-10 | Tee - 3/8 X 3/8 X 3/8 (BLKSTL). | 1 |
| 10 | 00-404193-00001 | Valve - Pilot 260 BROILER. | 1 |
| 11 | 00-719066 | Bushing - Pipe 3/8 -1/8. | 1 |
| 12 | SD-032-07 | Self-Tapping Screw 10-24 x 1/2 Hex. Hex Washer Hd., Type TT. | 1 |
| 13 | NS-044-09 | Nut Assy. 10-24 Hex KEPS. | 1 |
| 14 | FP-012-03 | Fitting - Elbow 1/2 TBG X 3/8 MPT. | 1 |
| 15 | SC-060-38 | Mach. Screw 10-24 X 2 Slotted Rd. Hd. | 1 |
| 16 | 00-499465-00001 | Bracket - Gas Mounting. | 1 |
| 17 | 00-426505-00009 | Tube - Flex 1/4" O.D. 9" Lg. | 1 |
| 18 | FP-035-46 | Pipe 3/8 x 1 Lg. TBE. | 1 |
| 19 | 00-426509-00024 | Tube - Flex 1/2" O.D. 24" Lg. | 1 |
| 20 | 00-426508-00048 | Tube - Flex 7/16" O.D. 48" Lg. | 1 |
| 21 | 00-962067-0KIT1 | Kit - Safety Valve Service (see SB1039) (Before 4/1/19). | 1 |
| 22 | 00-962067-00001 | Valve - Safety (Starting 4/1/19). | 1 |
| 23 | 00-412788-00048 | Thermocouple 48". | 1 |
| 24 | 00-962017-00001 | Heat Shield Assy. | 1 |

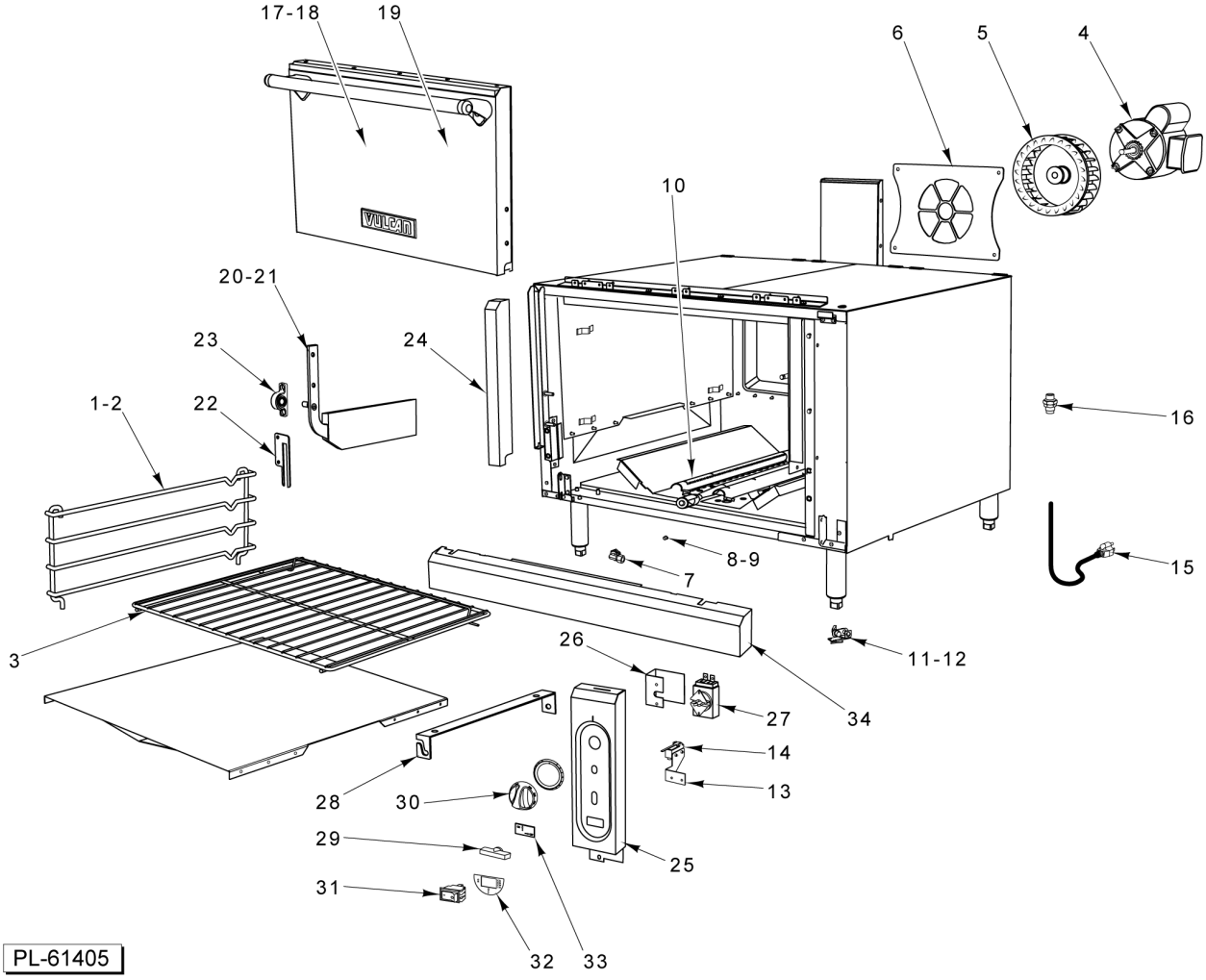
17-18
19
6
5
4
10
20-21
23
24
1-2
22
16
8-9
7
15
3
26
11-12
34
27
14
13
28
30
29
25
31
32
33
PL-61405

## C MODEL OVEN

## C MODEL OVEN

| ILLUS. PL-61405 | PART NO. | NAME OF PART | AMT. |
|---|---|---|---|
| 1 | 00-499468-00002 | Support - Wire Rack R.H. | 1 |
| 2 | 00-499468-00003 | Support - Wire Rack L.H. | 1 |
| 3 | 00-499517-00002 | Rack, Oven | 2 |
| 4 | 00-419730-00001 | Motor (1/6 Hp., 115/208-230 V., 50/60 Hz., 1 Ph.) | 1 |
| 5 | 00-415780-00008 | Wheel - Blower (Incls. Set Screws) | 1 |
| 6 | 00-499641-00001 | Grate - Motor Convection Oven | 1 |
| 7 | 00-404079-0000F | Nozzle, 90 Deg. Burner | 1 |
| 8 | 00-010901-00042 | Orifice - Spud (Drill 42) (Nat.) (Sea Level - 2499 FT.) | 1 |
| 9 | 00-010901-00051 | Orifice - Spud (Drill 51) (Pro) (Sea Level - 2499 Ft.) | 1 |
| 10 | 00-497891-00001 | Burner - Oven | 1 |
| 11 | 00-412787-00001 | Pilot - Oven (NAT) | 1 |
| | 00-426262-00004 | Pilot Oven (NAT) Starting March 2019 | AR |
| 12 | 00-412787-00002 | Pilot - Oven (LP) | 1 |
| | 00-426262-00005 | Pilot Oven (PRO) Starting March 2019 | AR |
| 13 | 00-956633-00002 | Bracket - Switch Door | 1 |
| 14 | 00-411496-000F1 | Switch - Micro Door | 1 |
| 15 | 00-405016-00001 | Cord - Electric Supply (120 V. Only) | 1 |
| 16 | 00-499554-00001 | Disconnect - Main Male Q | 1 |
| 17 | 00-499513-000G3 | Door W/O Handle | 1 |
| 18 | 00-499513-000G4 | Door W/O Handle (SST) | 1 |
| 19 | 00-956635-00001 | Handle - Oven Door | 1 |
| 20 | 00-499512-000G6 | Counterweight - Oven Convection R.H. | 1 |
| 21 | 00-499512-000G3 | Counterweight - Oven L.H. | 1 |
| 22 | 00-499452-00001 | Coverplate | 1 |
| *23 | 00-497906-00001 | Bearing - Pillow Block | 1 |
| 24 | 00-958353-00001 | Cover - Moulian Panel | 1 |
| 25 | 00-499507-00003 | Cover - Control Panel | 1 |
| 26 | 00-957464-00001 | Guard - Thermostat | 1 |
| 27 | 00-411506-00015 | Thermostat (200-550 Deg. F) | 1 |
| 28 | 00-497883-00002 | Bracket - Thmostat Bulb | 1 |
| 29 | 00-413157-00001 | Knob - Shut Off | 1 |
| 30 | 00-922511 | Knob - Thermostat | 1 |
| 31 | 00-715112 | Switch - Rocker, Lighted | 1 |
| 32 | 00-957609-00001 | Label - On - Off Cool Down | 1 |
| 33 | 00-414708-00001 | Plate - On-Off | 1 |
| 34 | 00-499515-000G1 | Kick Plate Assy | 1 |

* Order with SC-037-87, Qty. 2

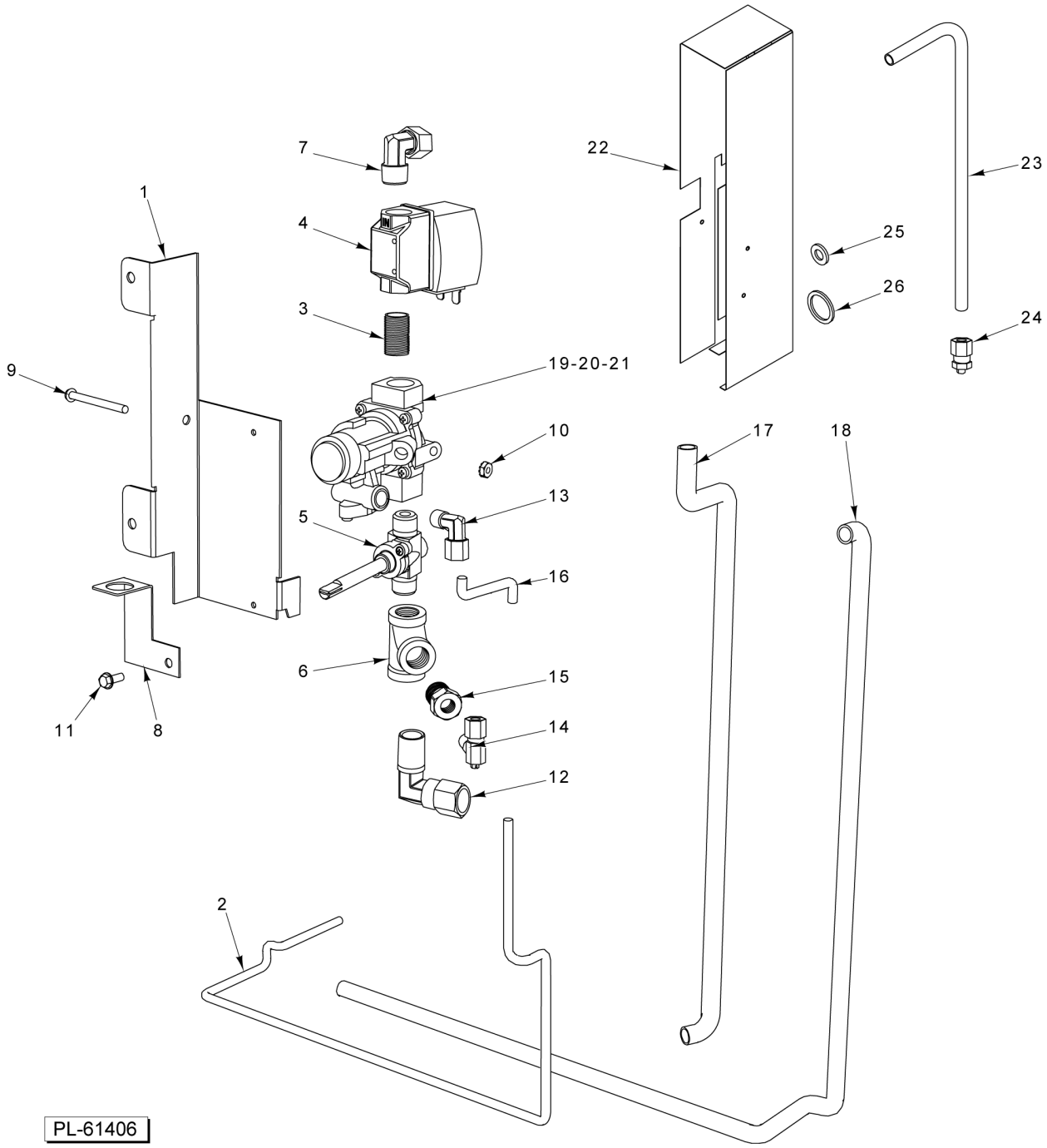


## C MODEL GAS MANIFOLD ASSY

## C MODEL GAS MANIFOLD ASSY

| ILLUS. PL-61406 | PART NO. | NAME OF PART | AMT. |
|---|---|---|---|
| 1 | 00-499651-00003 | Bracket - Mounting Gas (Convection) | 1 |
| 2 | 00-426505-00036 | Tube - Flex 1/4" O.D. 36" Lg. | 1 |
| 3 | FP-035-47 | PIPE - 3/8 X 1.125 (TBE) (BLKSTL) | 1 |
| 4 | 00-428045-00001 | Gas Solenoid Valve | 1 |
| 5 | 00-719971 | Valve - Gas Manual Shut-Off | 1 |
| 6 | FP-019-10 | Tee - 3/8 X 3/8 X 3/8 (BLKSTL) | 1 |
| 7 | FP-085-68 | Fitting- Elbow (7/16 TBG X 3/8 MPT) | 1 |
| 8 | 00-956615-00002 | Bracket - Manifold Support | 1 |
| 9 | SC-060-38 | Mach. Screw 10-24 X 2 Slotted Rd. Hd. | 1 |
| 10 | NS-044-09 | Nut Assy. 10-24 Hex KEPS | 1 |
| 11 | SD-032-07 | Self-Tapping Screw 10-24 x 1/2 Hex. Hex Washer Hd., Type TT | 1 |
| 12 | FP-012-03 | Fitting - Elbow 1/2 TBG X 3/8 MPT | 1 |
| 13 | FP-012-21 | Elbow 90 Deg. (1/8 Male Pipe x 1/4 Tube) | 1 |
| 14 | 00-404193-00001 | Valve - Pilot | 1 |
| 15 | FP-026-04 | Bushing - Pipe 3/8 to 1/8 | 1 |
| 16 | 00-426505-00006 | Tube - Flex (1/4 x 6 In.) | 1 |
| 17 | 00-426509-00024 | Tube - Flex 1/2" O.D. 24" Lg. | 1 |
| 18 | 00-426508-00048 | Tube - Flex 7/16" O.D. 48" Lg. | 1 |
| 19 | 00-962067-0KIT1 | Kit - Safety Valve Service (see SB1039) (Before 4/1/19) | 1 |
| 20 | 00-962067-00001 | Valve - Safety (Starting 4/1/19) | 1 |
| 21 | 00-412788-00048 | Thermocouple (48 In.) | 1 |
| 22 | 00-962017-00001 | Heat Shield Assy | 1 |
| 23 | 00-426508-00012 | Tube - Flex 7/16" OD x 12" Lg. | 1 |
| 24 | FP-085-42 | Fitting - Tube (7/16 TBG X 3/8 MPT) | 1 |
| 25 | 00-962107-00002 | Grommet | 1 |
| 26 | 00-962107-00001 | Grommet | 1 |

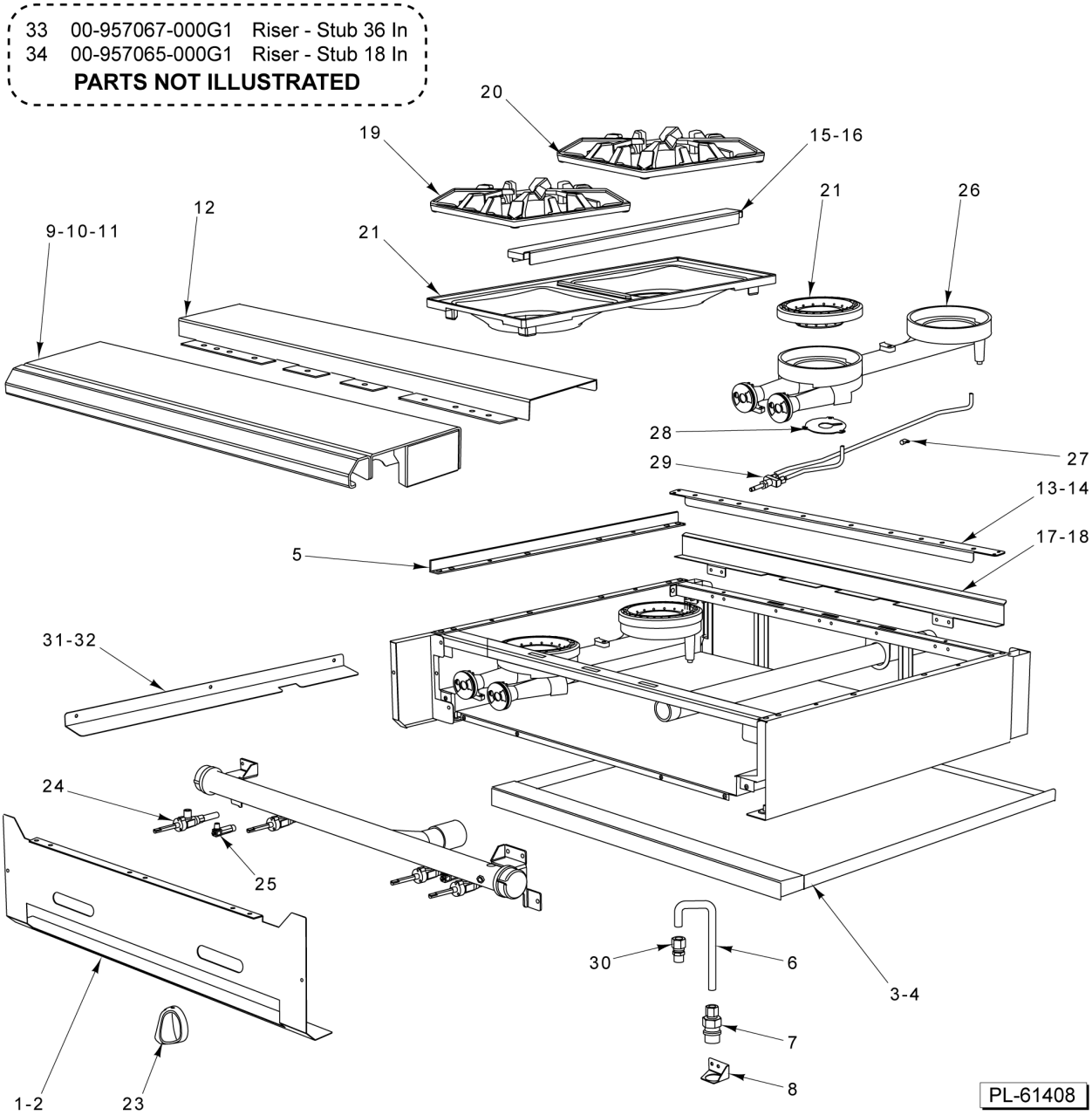


**36 IN - 4 & 18 IN - 2 OPEN TOP BURNER**

## 36 IN - 4 & 18 IN - 2 OPEN TOP BURNER

| ILLUS. PL-61408 | PART NO. | NAME OF PART | AMT. |
|---|---|---|---|
| 1 | 00-957573-00001 | Manifold Cover 36" (4 Open Top Burner) | 1 |
| 2 | 00-957564-00001 | Manifold Cover 18" (2 Open Top Burner) | 1 |
| 3 | 00-499006-000G2 | Tray - Crumb (SST) 36" (4 Open Top Burner) | 1 |
| 4 | 00-956696-000G2 | Tray - Crumb (SST) 18" (2 Open Top Burner) | AR |
| 5 | 00-497984-00001 | Retainer - Grate | 2 |
| 6 | 00-426509-00010 | Tube - Flex 1/2" O.D. 10" Lg. | 1 |
| 7 | 00-499555-00001 | Disconnect - Gas Female | 1 |
| 8 | 00-499047-00001 | Bracket - Disconnect | 1 |
| 9 | 00-499425-000G1 | Front Top Assy. 36" (4 Open Top Burner) | 1 |
| 10 | 00-957235-000G1 | Front Top Assy - Condiment Rail 36" (4 Open Top Burner) | 4 |
| 11 | 00-956658-000G1 | Front Top Assy 18" (2 Open Top Burner) | AR |
| 12 | 00-957239-000G1 | Front Top Slide Rail Assy | 4 |
| 13 | 00-499001-00004 | Support - (4) OTB Burner (SST) | 1 |
| 14 | 00-956690-00001 | Support - (2) OTB Burner (SST) | 1 |
| 15 | 00-499493-00001 | Support - Grate (Alum.) | 1 |
| 16 | 00-499493-00002 | Support - Grate (SST) | 1 |
| 17 | 00-499615-00002 | Deflector - Rear (SST) 36" (4 Open Top Burner) | 1 |
| 18 | 00-956697-00002 | Deflector - Rear (SST) 36" (4 Open Top Burner) | 1 |
| 19 | 00-959326-00001 | Grate Front 18 in | AR |
| 20 | 00-959326-00002 | Grate Rear 18 in | AR |
| *21 | NLA Bowl | Bowl - 18" Double Order Grate Front (#19) and Rear (#20) | AR |
| 22 | 00-957343-00002 | Burner - Head 6" | AR |
| 23 | 00-499712-00001 | Knob - HD Burner | AR |
| **24 | 00-957367-00001 | Valve - Burner | AR |
| 25 | 00-499970-00001 | Valve - Pilot Quick Disconnect | AR |
| 26 | 00-957398-000G1 | Venturi Assy | 1 |
| 27 | 00-402558-00004 | Clip - Tubing | AR |
| 28 | 00-958073-00001 | Plate - Restricor | 1 |
| 29 | 00-959108-000G1 | Pilot - Kit Open Top Burners | 1 |
| 30 | FP-012-02 | Fitting - Tube 1/2 TBG X 3/8 MPT | 1 |
| 31 | 00-499002-00003 | Deflector - HD Splash L.H. (SST) | 1 |
| 32 | 00-499002-00004 | Deflector - HD Splash R.H. (SST) | 1 |
| 33 | 00-957067-000G1 | Riser - Stub 36" W/Alum. Back 36" (4 Open Top Burner) | 1 |
| 34 | 00-957065-000G1 | Riser - Stub 18" W/Alum. Back 36" (4 Open Top Burner) | 1 |
| 35 | 00-010901-00042 | Orifice - Spud (Nat. Gas) FOR SEA LEVEL TO 2499' | 1 |
| 36 | 00-010901-00052 | Orifice - Spud (LP Gas) FOR SEA LEVEL TO 2499' | 1 |

* Bowl - 18" Double is now designed into Front and Rear Grate.
** Must Order Orifice Spud Separately Item 35 for Natural and Item 36 for

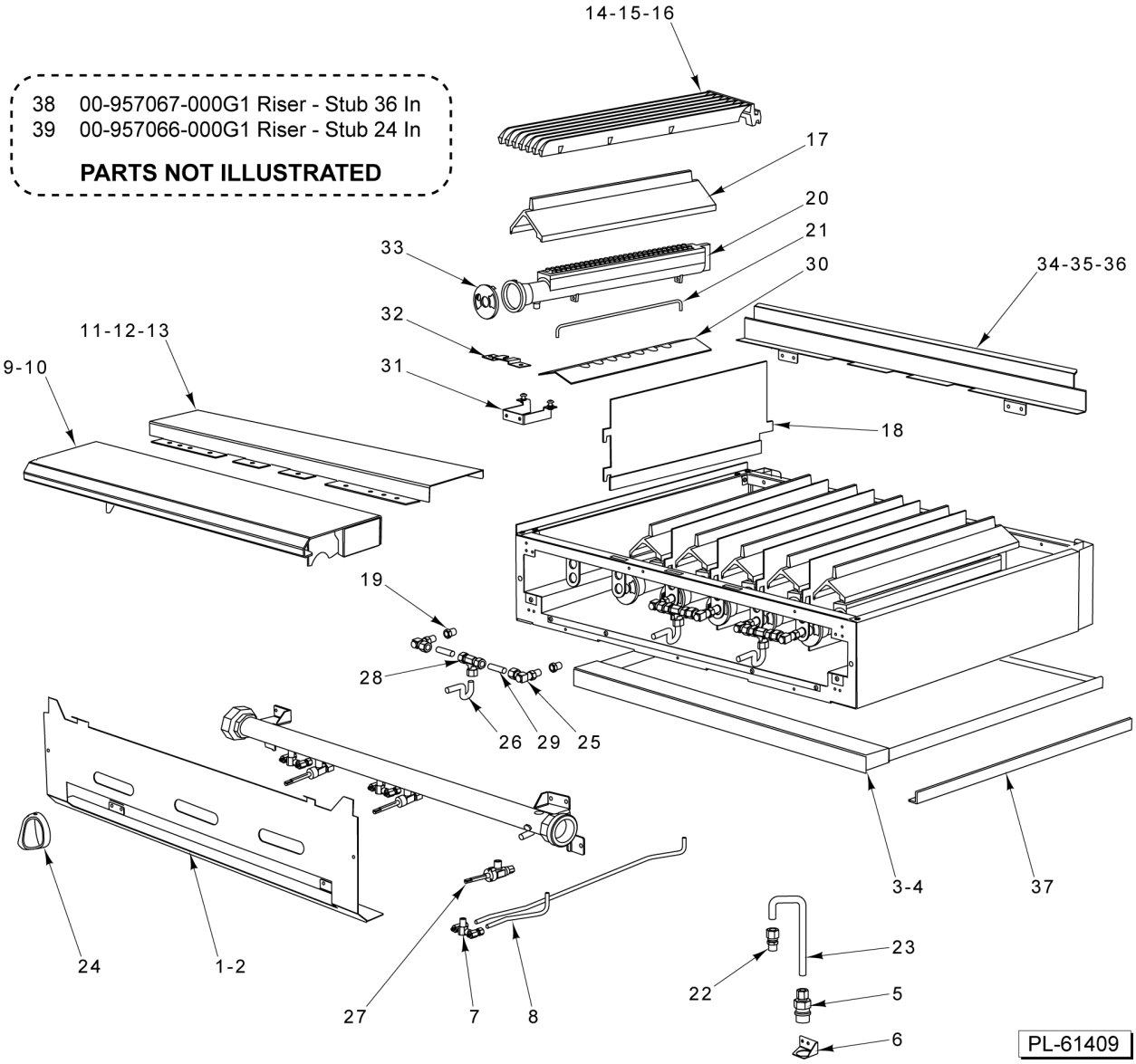


## 24/36 IN CHAR BROILER

## 24/36 IN CHAR BROILER

| ILLUS. PL-61409 | PART NO. | NAME OF PART | AMT. |
|---|---|---|---|
| 1 | 00-957574-00001 | Cover - Manifold 36" Char Broiler | 1 |
| 2 | 00-957567-00001 | Cover - Manifold 24" Char Broiler | 1 |
| 3 | 00-499006-000G2 | Tray - Crumb (SST) 36" Char Broiler | 1 |
| 4 | 00-956724-000G2 | Tray - Crumb (SST) 24" Char Broiler | 1 |
| 5 | 00-499555-00001 | Disconnect - Gas Female | 1 |
| 6 | 00-499047-00001 | Bracket - Disconnect | 1 |
| 7 | 00-957814-00001 | Valve - Dual Pilot | 1 |
| 8 | 00-788541-0000A | Tube - Pilot, Flex (W/Tip) | 1 |
| 9 | 00-499425-000G1 | Front Top Assy. 36" Char Broiler | 1 |
| 10 | 00-956705-000G1 | Front Top Assy. 24" Char Broiler | 1 |
| 11 | 00-957235-000G1 | Front Top Assy - Condiment Rail 36" Char Broiler | 1 |
| 12 | 00-957239-000G1 | Front Top Slide Rail Assy. 36" Char Broiler | 1 |
| 13 | 00-957357-000G1 | Front Top Assy. - Condiment Rail 24" Char Broiler | 1 |
| 14 | 00-412852-00001 | Grate - Top Straight | 6 |
| 15 | 00-722131 | Grate - Slanted 6-RIB 24" Char Broiler | 2 |
| 16 | 00-710424 | Grate - Slanted 7-RIB 24" Char Broiler | 2 |
| 17 | 00-710407 | Radient | 6 |
| 18 | 00-956614-00002 | Supercharger | 5 |
| 19 | 00-418051-0000F | Hood - Orifice | 6 |
| 20 | 00-957413-00001 | Burner Assy | 6 |
| 21 | 00-710455 | Burner Rod | 6 |
| 22 | FP-012-02 | Fitting - Tube 1/2 TBG X 3/8 MPT | 1 |
| 23 | 00-426509-00010 | Tube - Flex 1/2" O.D. 10" Lg | 1 |
| 24 | 00-499712-00001 | Knob - HD Burner | 3 |
| 25 | 00-719383 | W/O Plug | 6 |
| 26 | 00-722425 | Tubing - Flex 3/8" X 8" Lg | 3 |
| 27 | 00-957348-00001 | Valve - Gas | 3 |
| 28 | 00-714676 | TEE, 3/8" UNION, TUBE TO TUBE | 1 |
| 29 | 00-722468 | NLA - Obsolete--3/8"" Tube 1-1/4"" Long | 1 |
| 30 | 00-956748-00001 | Heat Deflector | 6 |
| 31 | 00-957412-00001 | Bracket - Dual Pilot | AR |
| 32 | 00-957335-00001 | Stabilizer - Burner | 6 |
| 33 | 00-719329 | Air Mixer Assy | 6 |
| 34 | 00-499615-00002 | Deflector - Rear (SST) 36" Char Broiler | 1 |
| 35 | 00-956725-00002 | Deflector - Rear (SST) 24" Char Broiler | 1 |
| 36 | 00-958442-00002 | Deflector - Rear (SST) 48" Char Broiler | AR |
| 37 | 00-499959-000G2 | Retainer - Grate | 2 |
| 38 | 00-957067-000G1 | Riser - Stub 36" W/Alum. Back 36" Char Broiler | 1 |
| 39 | 00-957066-000G1 | Riser - Stub 24" W/Alum. Back 24" Char Broiler | 1 |

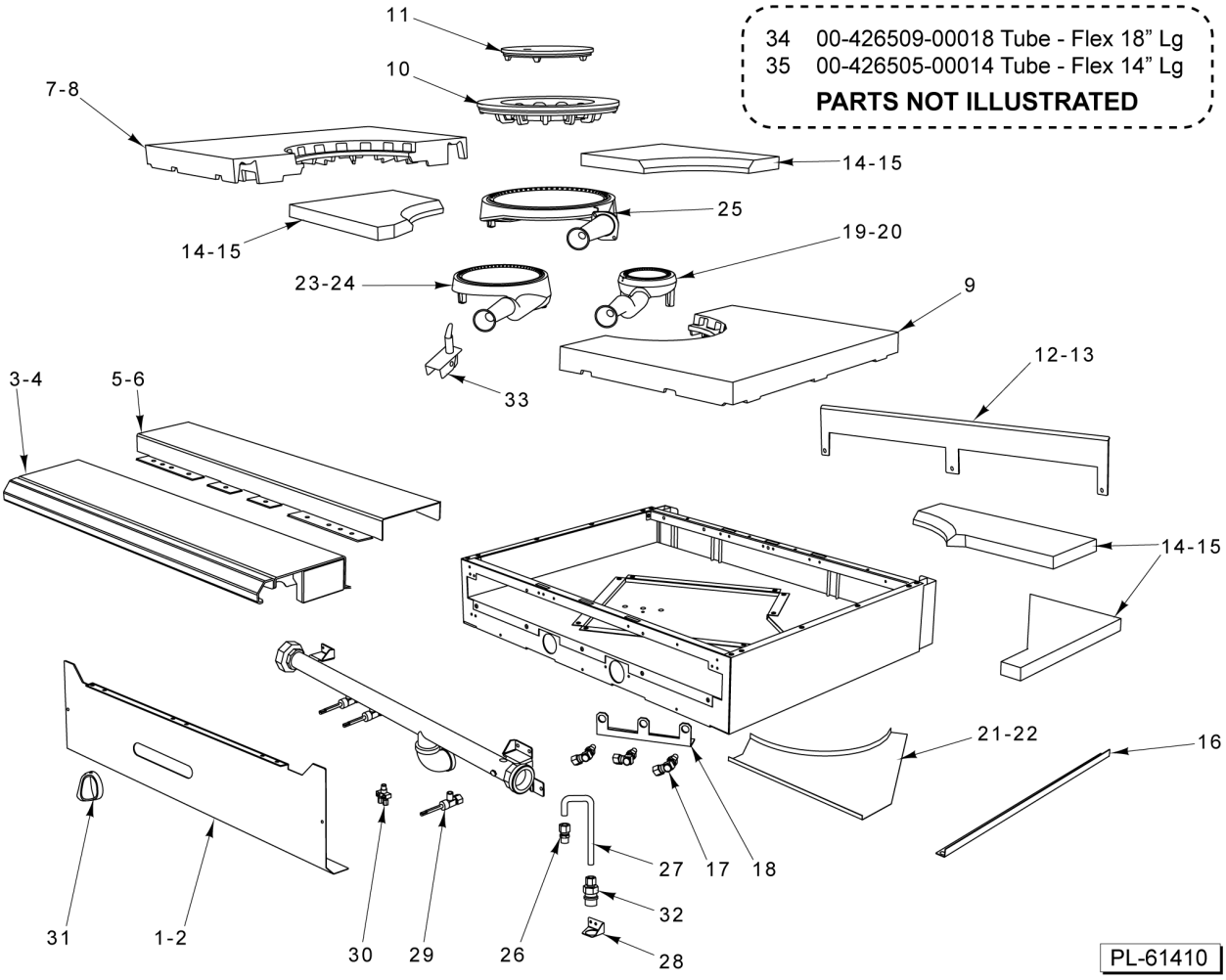


## 18/36 IN FRENCH TOP RADIAL FIN HOT TOP

## 18/36 IN FRENCH TOP RADIAL FIN HOT TOP

| ILLUS. PL-61410 | PART NO. | NAME OF PART | AMT. |
|---|---|---|---|
| 1 | 00-957576-00001 | Cover - Manifold W/Rail 36" Radial Fin. Hot Top | 1 |
| 2 | 00-957563-00001 | Cover Manifold 18" Radial Fin. Hot Top | 1 |
| 3 | 00-499425-000G1 | Front Top Assy. 36" Radial Fin. Hot Top | 1 |
| 4 | 00-956658-000G1 | Front Top Assy 18" Radial Fin. Hot Top | 1 |
| 5 | 00-957235-000G1 | Front Top Assy - Condiment Rail | 1 |
| 6 | 00-957239-000G1 | Front Top Slide Rail Assy | 1 |
| 7 | 00-499814-00001 | Casting - LH Radial Fin. 36" 36" Radial Fin. Hot Top | 1 |
| 8 | 00-956800-00001 | Casting - Radial Fin. 18" Radial Fin. Hot Top | 1 |
| 9 | 00-499814-00002 | Casting - RH Radial Fin. 36" | 1 |
| 10 | 00-400705-00001 | Ring (Top) | 1 |
| 11 | 00-715211-000GR | Plate - Top | 1 |
| 12 | 00-956809-00002 | Deflector - Radial Fin. Rear 36" Radial Fin. Hot Top | 1 |
| 13 | 00-956663-00001 | Deflector - Radial Fin. 18" Radial Fin. Hot Top | 1 |
| 14 | 00-956622-000G1 | Brick Set 36" Radial Fin. Hot Top | 1 |
| 15 | 00-956799-000G1 | Brick Set 18" Radial Fin. Hot Top | 1 |
| 16 | 00-497984-00001 | Retainer - Grate | 1 |
| 17 | 00-719383 | Elbow 3/8 Orifice W/O Plug | 1 |
| | 00-404079-0000F | Elbow 7/16 Orifice W/O Plug - 5/8 nut | 1 |
| 18 | 00-499810-00002 | Bracket - Pilot | 1 |
| 19 | 00-957801-000G1 | Burner - Inner, Radial Fin 36" Radial Fin. Hot Top | 1 |
| 20 | 00-956794-00001 | Burner - 18" Inner 18" Radial Fin. Hot Top | 1 |
| 21 | 00-957946-000G1 | Plate - Aeration Assy. 36" Radial Fin. Hot Top | 1 |
| 22 | 00-957710-000G1 | Plate - Aeration, Assy. 18" Radial Fin. Hot Top | 1 |
| 23 | 00-409413-000G1 | Burner 36" Radial Fin. Hot Top | 1 |
| 24 | 00-956793-00001 | Burner - 18" Outer 18" Radial Fin. Hot Top | 1 |
| 25 | 00-409412-000G1 | Burner - Top Outer | 1 |
| 26 | FP-012-02 | Fitting - Tube 1/2 TBG X 3/8 MPT | 1 |
| 27 | 00-426509-00010 | Tube - Flex 1/2" O.D. 10" Lg | 1 |
| 28 | 00-499047-00001 | Bracket - Disconnect | 1 |
| 29 | 00-408379-00004 | Valve - Burner (Top) | 3 |
| 30 | 00-957814-00001 | Valve - Dual Pilot | 1 |
| 31 | 00-499712-00001 | Knob - HD Burner | 3 |
| 32 | 00-499555-00001 | Disconnect - Gas Female | 1 |
| 33 | 00-409839-00003 | Burner - Pilot | 3 |
| 34 | 00-426509-00018 | Tube - Flex 1/2" O.D. 18" Lg | 3 |
| 35 | 00-426505-00014 | Tube - Flex 1/4" O.D. 14" Lg | 2 |

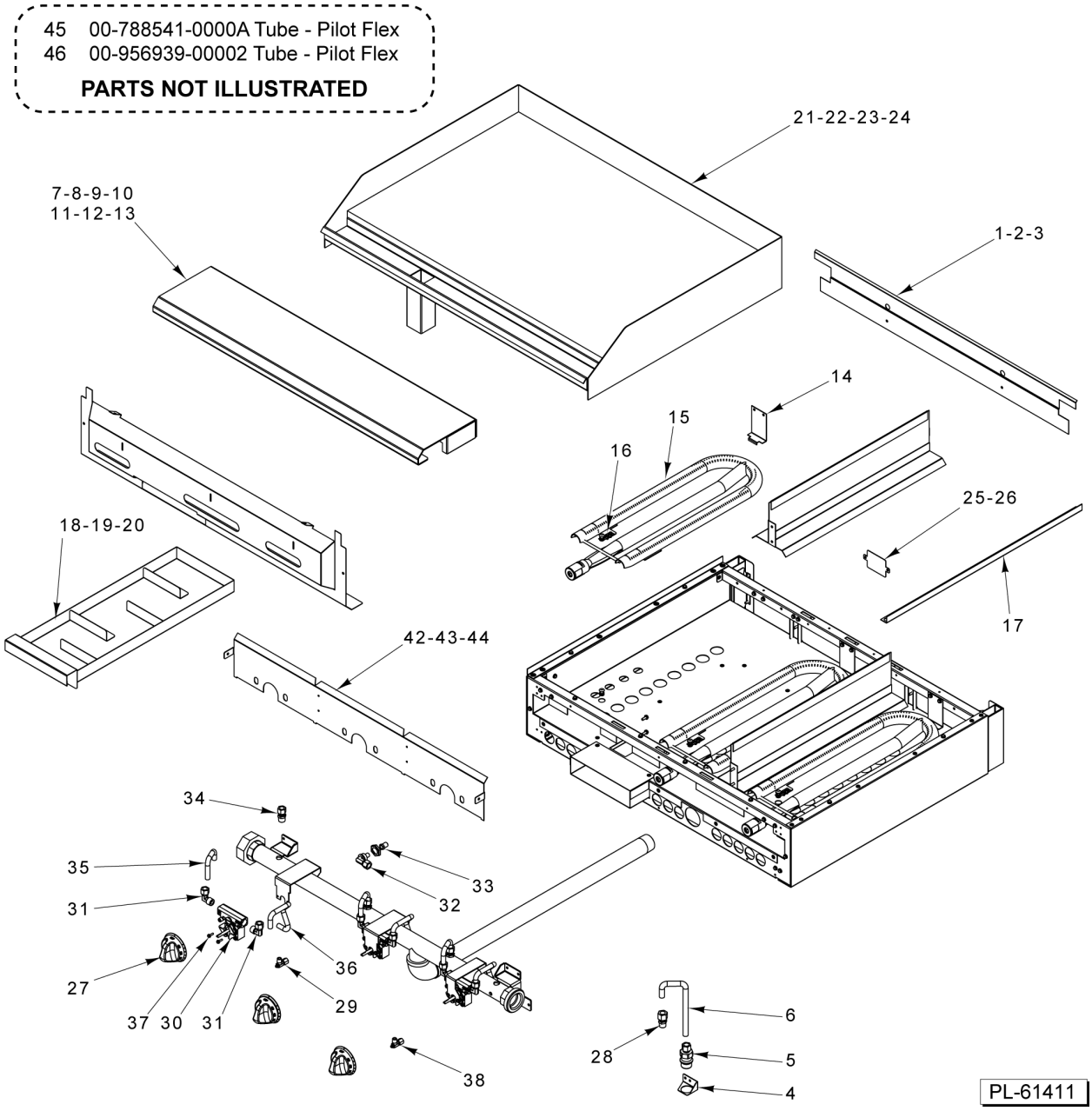


**18/24/36 IN THERMO CONTROL GRIDDLE TOP**

## 18/24/36 IN THERMO CONTROL GRIDDLE TOP

| ILLUS. PL-61411 | PART NO. | NAME OF PART | AMT. |
|---|---|---|---|
| 1 | 00-957961-00001 | Panel - Rear Closure 36" (Alum.) (36" Griddle Top) | 1 |
| 2 | 00-957989-00001 | Panel - Rear Closure 24" (24" Griddle Top) | 1 |
| 3 | 00-957993-00001 | Panel - Rear Closure 18" (18" Griddle Top) | AR |
| 4 | 00-499047-00001 | Bracket - Disconnect | 1 |
| 5 | 00-499555-00001 | Disconnect - Gas Female | 1 |
| 6 | 00-426509-00010 | Tube - Flex 1/2" O.D. 10" Lg | 1 |
| 7 | 00-499425-000G1 | Front Top Assy. (36" Griddle Top) | 1 |
| 8 | 00-956705-000G1 | Front Top Assy. (24" Griddle Top) | 1 |
| 9 | 00-956658-000G1 | Front Top Assy (18" Griddle Top) | 1 |
| 10 | 00-957235-000G1 | Front Top Assy - Condiment Rail (36" Griddle Top) | 1 |
| 11 | 00-957239-000G1 | Front Top Slide Rail Assy. (36" Griddle Top) | 1 |
| 12 | 00-957357-000G1 | Front Top Assy. - Condiment Rail (24" Griddle Top) | 1 |
| 13 | 00-957235-000G1 | Front Top Assy - Condiment Rail (18" Griddle Top) | 1 |
| 14 | 00-499112-00001 | Bracket - Griddle Burner Support | 3 |
| 15 | 00-499635-00001 | Griddle Burner Assy | 3 |
| 16 | 00-413302-00001 | Clip - Pilot Mounting | 3 |
| 17 | 00-497984-00001 | Retainer - Grate | 2 |
| 18 | 00-957982-000G4 | Grease Drawer Assy. (36" Griddle Top) | 1 |
| 19 | 00-956709-000G4 | Grease Drawer Assy. (24" Griddle Top) | 1 |
| 20 | 00-956677-000G4 | Grease Drawer Assy. (18" Griddle Top) | 1 |
| 21 | 00-499622-000G2 | 36 In Griddle Assy | 1 |
| 22 | 00-499957-000G2 | 24 In Griddle Assy | 1 |
| 23 | 00-956674-000G2 | 18 In Griddle Assy | 1 |
| 24 | 00-957170-000G1 | Griddle Baffle Assy. Center | 2 |
| 25 | 00-956662-00001 | Cover - Rear Manifold | 1 |
| 26 | 00-956710-00001 | Cover - Hot Top 24" Griddle | 1 |
| 27 | 00-499488-00002 | Knob - Gas Thermostat | 3 |
| 28 | FP-012-02 | Fitting - Tube 1/2 TBG X 3/8 MPT | 1 |
| 29 | 00-404193-00001 | Valve - Pilot | 3 |
| 30 | 00-499488-00001 | Thermostat - Gas | 3 |
| 31 | FP-085-68 | Fitting- Elbow (7/16 TBG X 3/8 MPT) | 6 |
| 32 | 00-404079-0000F | Nozzle | 3 |
| 33 | 00-418051-0000F | Hood - Orifice | 3 |
| 34 | FP-085-42 | Fitting - Tube (7/16 TBG X 3/8 MPT) | 3 |
| 35 | 00-426508-00006 | Tube - Flex 7/16" O.D. 6" Lg | 3 |
| 36 | 00-426508-00010 | Tube - Flex 7/16" O.D. 10" Lg | 3 |
| 37 | SD-036-79 | Self-Tapping Screw 6-32 x 1/2 Type TT Hex Hd. (SST) | 6 |
| 38 | FP-085-53 | Pipe Plug 1/8 | 1 |
| 39 | 00-957604-000G2 | Cover - Manifold 36" Thermo Griddle (Condiment Rail) | 1 |
| 40 | 00-957602-000G2 | Cover - Manifold 24" Therno Griddle (Condiment Rail) | 1 |
| 41 | 00-957594-000G1 | Cover - Manifold 18" Thermo Griddle | 1 |
| 42 | 00-957396-00002 | Baffle - Griddle | 1 |
| 43 | 00-957988-00002 | Baffle - 24" Forward Griddle | 1 |
| 44 | 00-957992-00002 | Bafffle - 18" Forward Griddle | 1 |
| 45 | 00-788541-0000A | Tube - Pilot, Flex (W/Tip) | 2 |
| 46 | 00-956939-00002 | Tube - Pilot, Flex (W/Tip) | 1 |

| | | |
|---|---|---|
| 36 | 00-957170-000G1 | Griddle Baffle Assy. |
| 37 | 00-788541-0000A | Tube - Pilot Flex |
| 38 | 00-956939-00002 | Tube - Pilot Flex |

**PARTS NOT ILLUSTRATED**

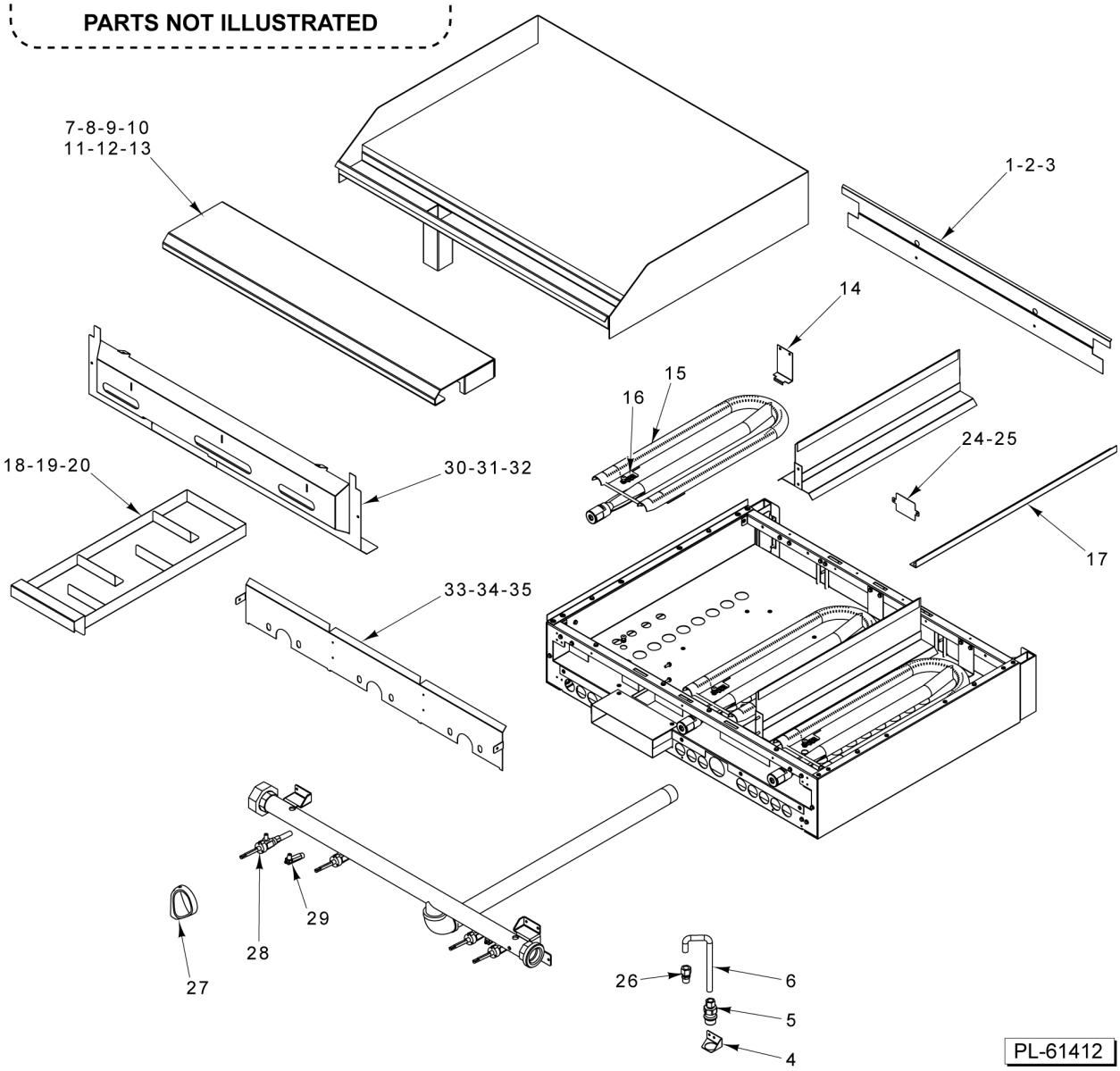


## 18/24/36 IN MANUAL CONTROL GRIDDLE TOP

## 18/24/36 IN MANUAL CONTROL GRIDDLE TOP

| ILLUS. PL-61412 | PART NO. | NAME OF PART | AMT. |
|---|---|---|---|
| 1 | 00-957961-00001 | Panel - Rear Closure 36" (Alum.) (36" Griddle Top) | 1 |
| 2 | 00-957989-00001 | Panel - Rear Closure 24" (24" Griddle Top) | 1 |
| 3 | 00-957993-00001 | Panel - Rear Closure 18" (18" Griddle Top) | AR |
| 4 | 00-499047-00001 | Bracket - Disconnect | 1 |
| 5 | 00-499555-00001 | Disconnect - Gas Female | 1 |
| 6 | 00-426509-00010 | Tube - Flex 1/2" O.D. 10" Lg. | 1 |
| 7 | 00-499425-000G1 | Front Top Assy. (36" Griddle Top) | 1 |
| 8 | 00-956705-000G1 | Front Top Assy. (24" Griddle Top) | 1 |
| 9 | 00-956658-000G1 | Front Top Assy (18" Griddle Top) | 1 |
| 10 | 00-957235-000G1 | Front Top Assy - Condiment Rail (36" Griddle Top) | 1 |
| 11 | 00-957239-000G1 | Front Top Slide Rail Assy. (36" Griddle Top) | 1 |
| 12 | 00-957357-000G1 | Front Top Assy. - Condiment Rail (24" Griddle Top) | 1 |
| 13 | 00-957235-000G1 | Front Top Assy - Condiment Rail 18" Griddle Top | 1 |
| 14 | 00-499112-00001 | Bracket - Griddle Burner Support | 3 |
| 15 | 00-499635-00001 | Griddle Burner Assy | 3 |
| 16 | 00-413302-00001 | Clip - Pilot Mounting | 3 |
| 17 | 00-497984-00001 | Retainer - Grate | 2 |
| 18 | 00-957982-000G4 | Grease Drawer Assy. (36" Griddle Top) | 1 |
| 19 | 00-956709-000G4 | Grease Drawer Assy. (24" Griddle Top) | 1 |
| 20 | 00-956677-000G4 | Grease Drawer Assy. (18" Griddle Top) | 1 |
| 21 | 00-499622-000G2 | 36 In Griddle Assy | 1 |
| 22 | 00-499957-000G2 | 24 In Griddle Assy | 1 |
| 23 | 00-956674-000G2 | 18 In Griddle Assy | 1 |
| 24 | 00-956662-00001 | Cover - Rear Manifold | 1 |
| 25 | 00-956710-00001 | Cover - Hot Top 24" Griddle | 1 |
| 26 | FP-012-02 | Fitting - Tube 1/2 TBG X 3/8 MPT | 1 |
| 27 | 00-499712-00001 | Knob - HD Burner | AR |
| *28 | 00-957367-00001 | Valve - Burner | AR |
| 29 | 00-499970-00001 | Valve - Pilot Quick Disconnect | AR |
| 30 | 00-957604-000G2 | Cover - Manifold 36" Thermo Griddle (Condiment Rail) | 1 |
| 31 | 00-957602-000G2 | Cover - Manifold 24" Therno Griddle (Condiment Rail) | 1 |
| 32 | 00-957594-000G1 | Cover - Manifold 18" Thermo Griddle | 1 |
| 33 | 00-957396-00002 | Baffle - Griddle | 1 |
| 34 | 00-957988-00002 | Baffle - 24" Forward Griddle | 1 |
| 35 | 00-957992-00002 | Bafffle - 18" Forward Griddle | 1 |
| 36 | 00-957170-000G1 | Griddle Baffle Assy. Center | 2 |
| 37 | 00-788541-0000A | Tube - Pilot, Flex (W/Tip) | 2 |
| 38 | 00-956939-00002 | Tube - Pilot, Flex (W/Tip) | 1 |
| 39 | 00-010901-00042 | Orifice - Spud (Nat. Gas) FOR SEA LEVEL TO 2499' | 1 |
| 40 | 00-010901-00052 | Orifice - Spud (LP Gas) FOR SEA LEVEL TO 2499' | 1 |

* Must Order Orifice Spud Separately Item 39 for Natural and Item 40 for

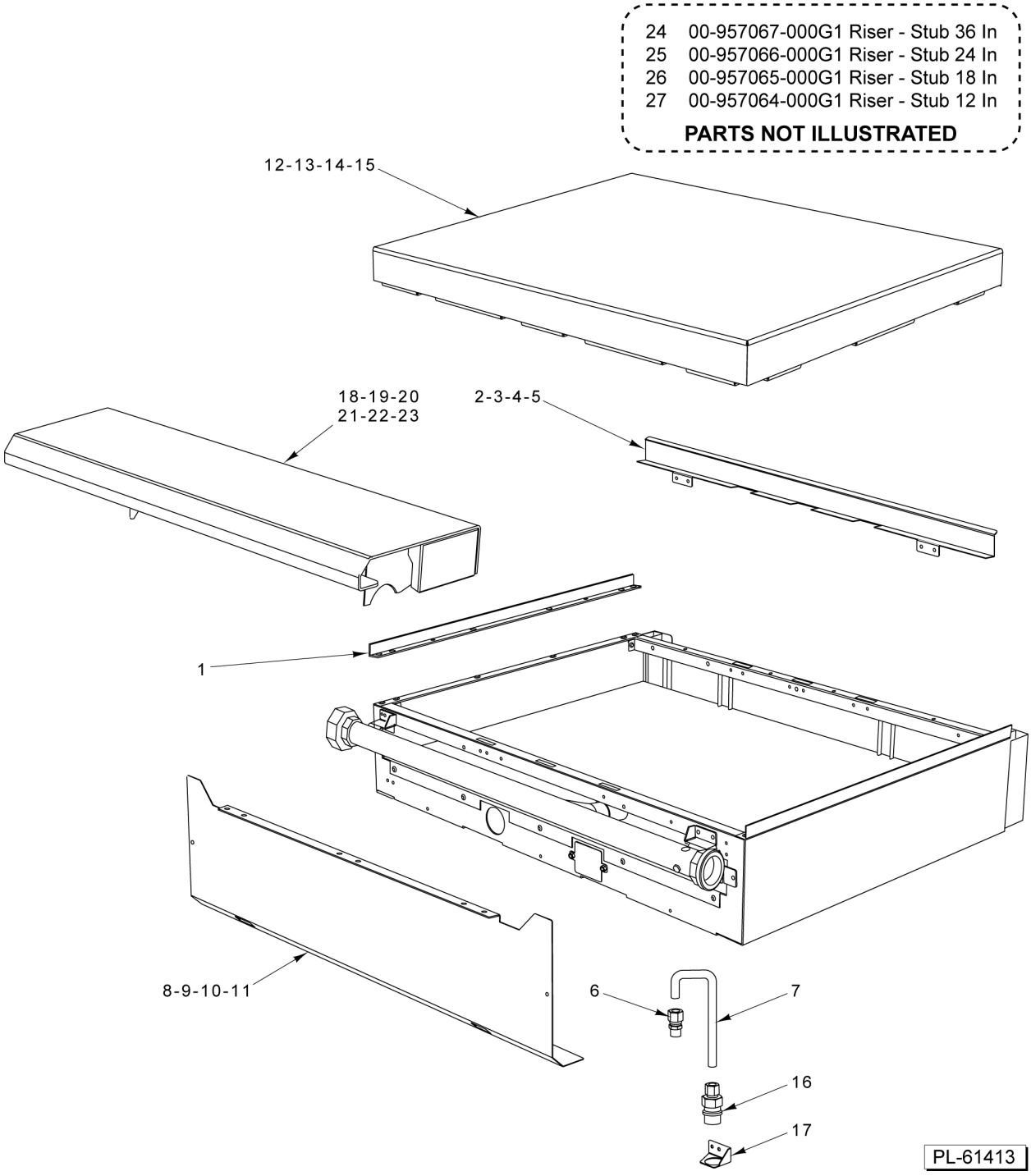


**12/18/24/36 IN WORK TOP**

## 12/18/24/36 IN WORK TOP

| ILLUS. PL-61413 | PART NO. | NAME OF PART | AMT. |
|---|---|---|---|
| 1 | 00-497984-00001 | Retainer - Grate | 2 |
| 2 | 00-499615-00002 | Deflector - Rear (SST) (36" Work Top) | 1 |
| 3 | 00-956725-00002 | Deflector - Rear (SST) (24" Work Top) | 1 |
| 4 | 00-956697-00002 | Deflector - Rear (SST) (18" Work Top) | 1 |
| 5 | 00-499935-00002 | Deflector - Rear (SST) (12" Work Top) | 1 |
| 6 | FP-012-02 | Fitting - Tube 1/2 TBG X 3/8 MPT | 1 |
| 7 | 00-426509-00010 | Tube - Flex 1/2" O.D. 10" Lg | 1 |
| 8 | 00-957590-00001 | Cover Manifold (36" Work Top) | 1 |
| 9 | 00-957572-00001 | Cover Manifold (24" Work Top) | 1 |
| 10 | 00-957566-00001 | Cover - Manifold (18" Work Top) | 1 |
| 11 | 00-957558-00001 | Cover - Manifold (12" Work Top) | 1 |
| 12 | 00-956639-000G1 | Work Top Assy. 36" | 1 |
| 13 | 00-956639-000G2 | Work Top Assy. 24" | 1 |
| 14 | 00-956639-000G3 | Work Top Assy. 18" | 1 |
| 15 | 00-956639-000G4 | Work Top Assy. 12" | 1 |
| 16 | 00-499555-00001 | Disconnect - Gas Female | 1 |
| 17 | 00-499047-00001 | Bracket - Disconnect | 1 |
| 18 | 00-499425-000G1 | Front Top Assy. (36" Work Top) | 1 |
| 19 | 00-957235-000G1 | Front Top Assy - Condiment Rail (36" Work Top) | 1 |
| 20 | 00-956705-000G1 | Front Top Assy. (24" Work Top) | 1 |
| 21 | 00-957357-000G1 | Front Top Assy. - Condiment Rail (24" Work Top) | 1 |
| 22 | 00-956658-000G1 | Front Top Assy (18" Work Top) | 1 |
| 23 | 00-499966-000G1 | Front Top Assy. (12" Work Top) | 1 |
| 24 | 00-957067-000G1 | Riser - Stub 36" W/Alum. Back | 1 |
| 25 | 00-957066-000G1 | Riser - Stub 24" W/Alum. Back | 1 |
| 26 | 00-957065-000G1 | Riser - Stub 18" W/Alum. Back | 1 |
| 27 | 00-957064-000G1 | Riser - Stub 12" W/Alum. Back | 1 |

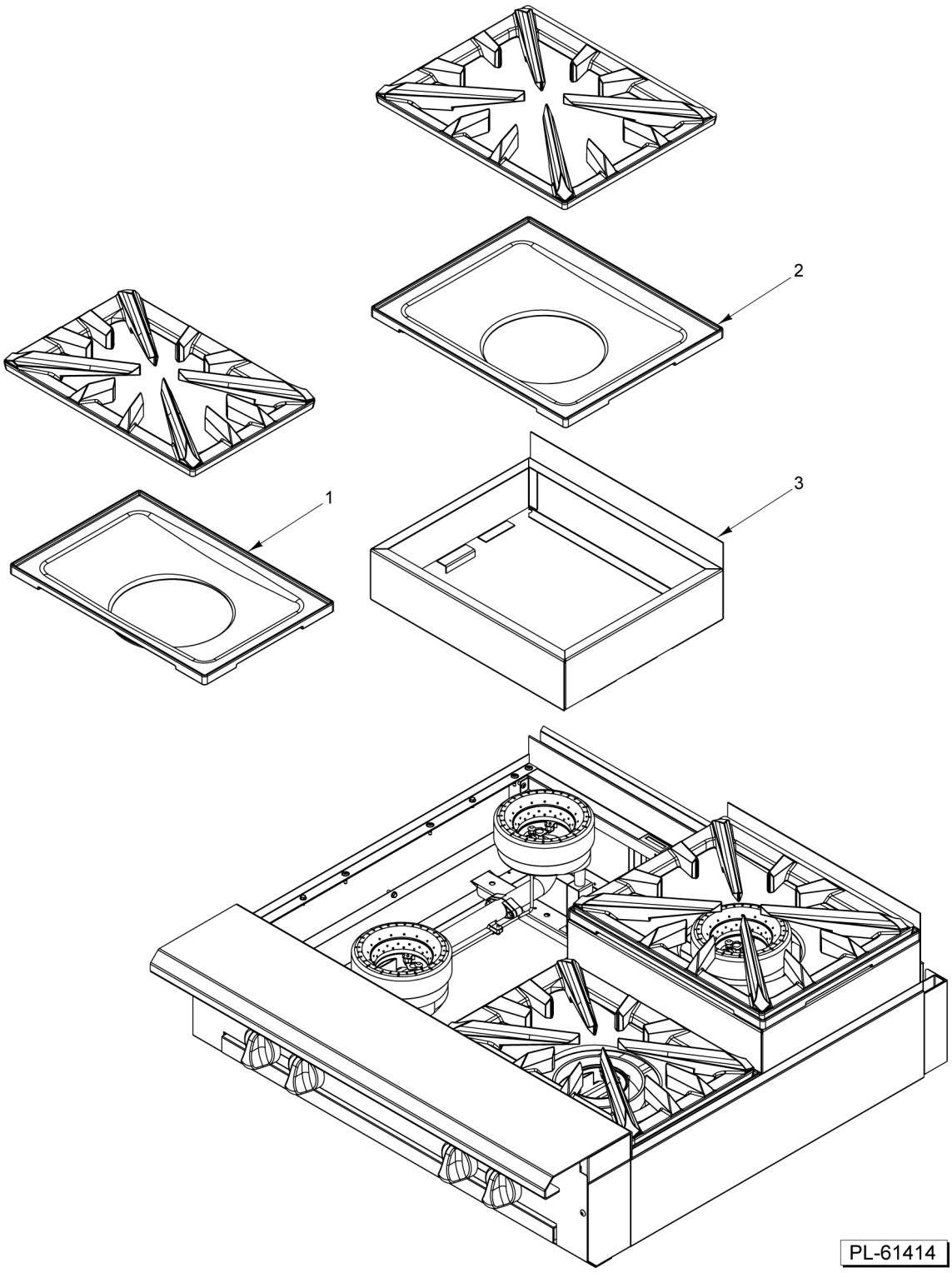


**18/36 IN STEP UP OPEN TOP BURNER**

## 18/36 IN STEP UP OPEN TOP BURNER

| ILLUS. PL-61414 | PART NO. | NAME OF PART | AMT. |
|---|---|---|---|
| 1 | 00-957882-00001 | Bowl - Front 18' Step Up | 2 |
| 2 | 00-957881-00001 | Bowl - Rear 18: Step Up | 2 |
| 3 | 00-957877-000G1 | Frame - 18" Step Up | 2 |

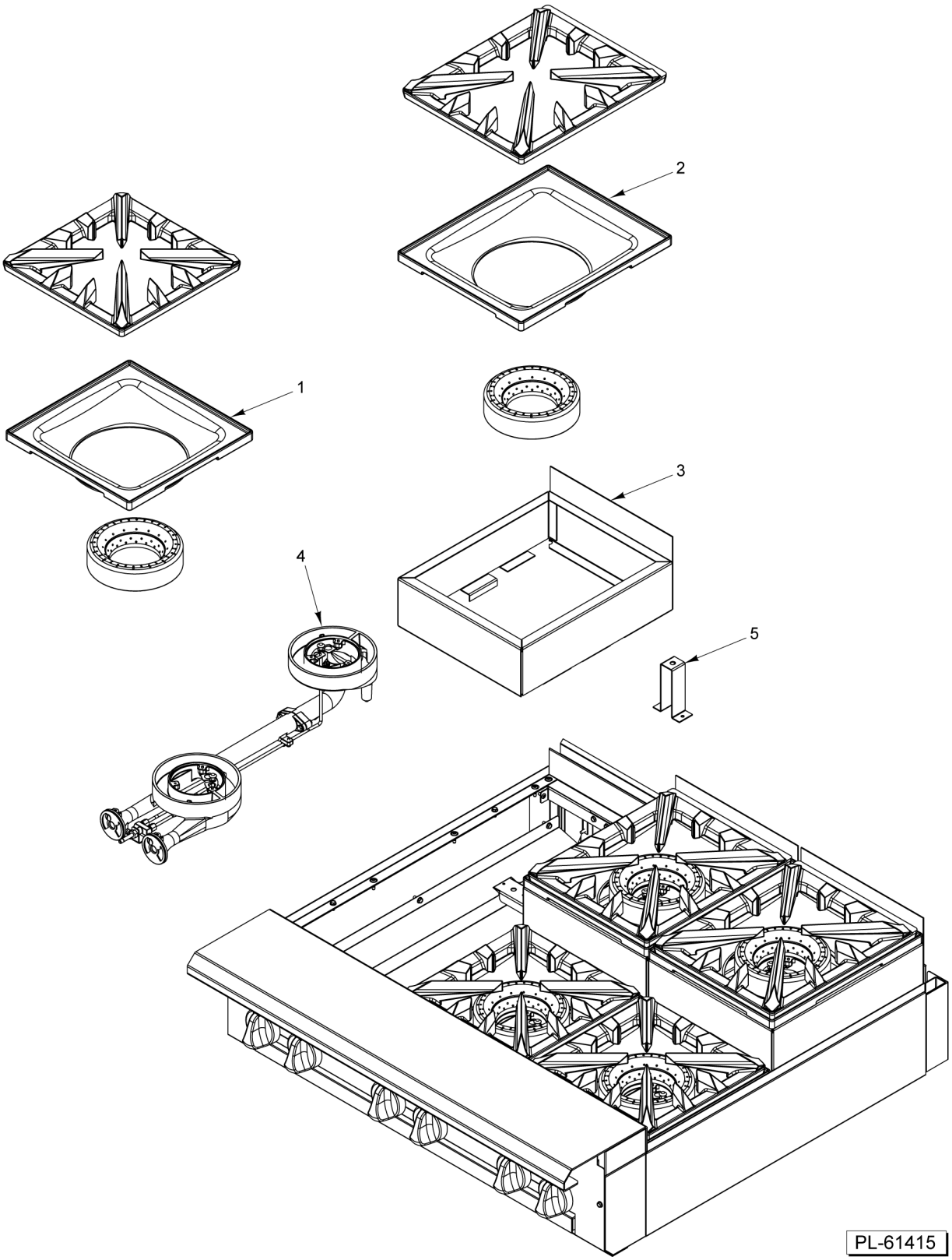


**36 IN 6 OPEN TOP STEP UP BURNER**

## 36 IN 6 OPEN TOP STEP UP BURNER

| ILLUS. PL-61415 | PART NO. | NAME OF PART | AMT. |
|---|---|---|---|
| 1 | 00-957878-00001 | Bowl - 12" Front | 1 |
| 2 | 00-958879-00001 | Bowl - 12" Rear | 1 |
| 3 | 00-957877-000G1 | Frame - 18" Step Up | 1 |
| 4 | 00-957817-000G1 | Burner Assy. - Step Up | AR |
| 5 | 00-957880-00001 | Support - Burner Step Up | AR |

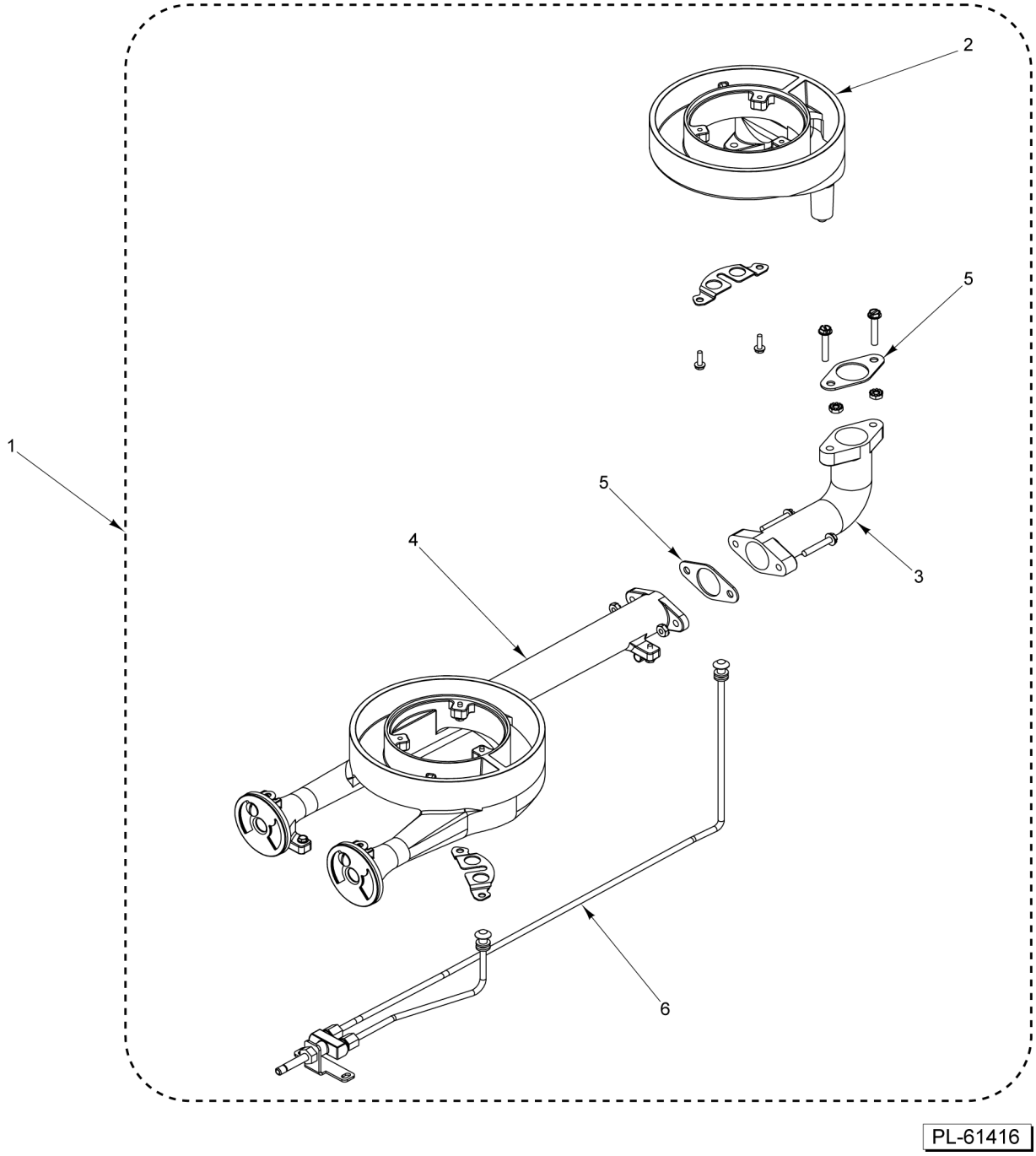


**STEP UP BURNER ASSEMBLY**

## STEP UP BURNER ASSEMBLY

| ILLUS. PL-61416 | PART NO. | NAME OF PART | AMT. |
|---|---|---|---|
| 1 | 00-957817-000G1 | Burner Assy. - Step Up | 1 |
| 2 | 00-957826-00001 | Burner - Rear Step Up | 1 |
| 3 | 00-957825-00001 | Elbow - Center Step Up | 1 |
| 4 | 00-957824-00001 | Burner - Front Step Up | 1 |
| 5 | 00-957823-00001 | Gasket | 1 |
| 6 | 00-959108-000G2 | Pilot Assy. - Step Up | 1 |