Project _____

AIA # _____ SIS # _____

Item # _____ Quantity _____ C.S.I. Section 114000

VHP SERIES
Heavy Duty Gas Hot Plate



Model VHP424

MODELS

- ❑ **VHP212** 12" wide
- ❑ **VHP424** 24" wide
- ❑ **VHP636** 36" wide
- ❑ **VHP848** 48" wide
- ❑ **VHP212U** 12" wide with 4" elevated rear step-up burners
- ❑ **VHP424U** 24" wide with 4" elevated rear step-up burners
- ❑ **VHP636U** 36" wide with 4" elevated rear step-up burners
- ❑ **VHP848U** 48" wide with 4" elevated rear step-up burners

STANDARD FEATURES

- Stainless steel sides, control panel, top trim and backsplash
- Full width pull out crumb tray
- Heavy duty cast iron top grates
- 30,000 BTU/hr. (27,500 BTU/hr. for LP gas) open burners with lift-off heads
- Standing pilot ignition system
- One infinite heat control valve for each burner
- 4" adjustable legs
- ¾" NPT rear gas connection and gas pressure regulator
- One year limited parts and labor warranty

OPTIONS

- ❑ Cutting board
- ❑ Condiment rail
- ❑ Plate rail
- ❑ Stainless steel stand with undershelf and casters

SPECIFIER STATEMENT

Exterior Dimensions:
34" wide x 31⅜" deep x 12" working height

CSA design certified. NSF certified.

SPECIFY TYPE OF GAS WHEN ORDERING.
SPECIFY ALTITUDE WHEN ABOVE 2,000 FEET.

VHP SERIES – Heavy Duty Gas Hot Plate

Approved by_____ Date_____ Approved by_____ Date_____

VHP SERIES
Heavy Duty Gas Hot Plate

INSTALLATION INSTRUCTIONS

INSTALLATION MANUAL

1. A gas pressure regulator supplied with the unit must be installed. Natural gas 5.0" (127 mm) W.C., propane gas 10.0" (254 mm) W.C.
2. An adequate ventilation system is required for commercial cooking equipment. Information may be obtained by visiting the National Fire Protection Association website at https://www.nfpa.org/. Refer to NFPA No. 96.
3. These units are manufactured for installation in accordance with ANSZ223.1A (latest edition), National Fuel Gas Code. Information may be obtained from The American Gas Association website at https://www.aga.org/.

NOTE: In The Commonwealth of Massachusetts
All gas appliances vented through a ventilation hood or exhaust system equipped with a damper or with a power means of exhaust shall comply with 248 CMR.

4. Equipment Clearance

	Non-Combustibles		Combustibles	
	Sides	Back	Sides	Back
Standard	0"	0"	13"	6"
Step-Up	0"	0"	13"	9"

5. This appliance is manufactured for commercial installation only and is not intended for home use.

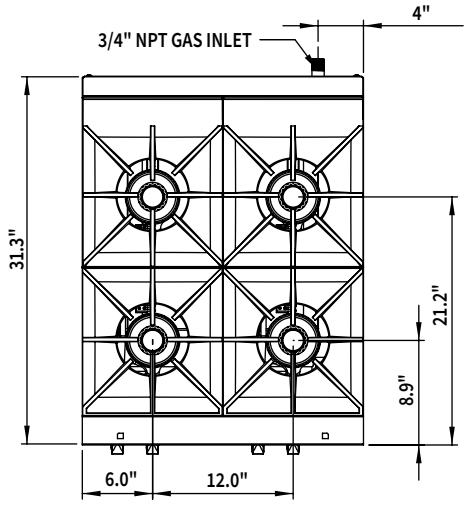

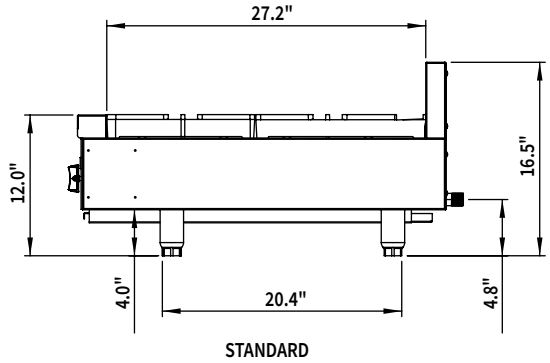

STANDARD

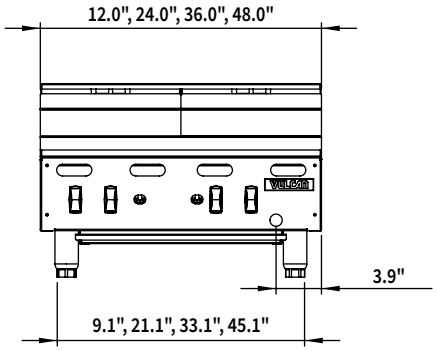

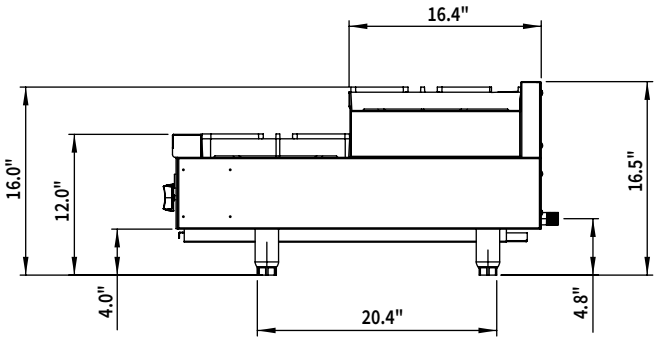

STEP-UP

CAD and/or Revit Files Available

Model	Width	Depth	Overall Height*	Working Height*	No. of Burners	Total BTU/Hr. Natural Gas	Total BTU/Hr. Propane Gas	Approximate Shipping Wt. (Lb./KG)
VHP212	12"	31⅜"	16⅝"	12"	2	60,000	55,000	95 lbs./43 kg
VHP424	24"				4	120,000	110,000	165 lbs./74 kg
VHP636	36"				6	180,000	165,000	265 lbs./119 kg
VHP848	48"				8	240,000	220,000	310 lbs./140 kg

*These are nominal dimensions and can vary by +1.75" with adjustable legs.

As continued product improvement is a policy of Vulcan, specifications are subject to change without notice.