CATALOG OF REPLACEMENT PARTS

ELECTRIC AND GAS BRAISING PANS

ML-126847	VG30
ML-126848	VG40
ML-126849	VE30
ML-126850	VE40
ML-152047	VE30 Fast Batch
ML-152048	VE40 Fast Batch

VULCAN-HART DIVISION OF ITW FOOD EQUIPMENT GROUP, LLC 3600 NORTH POINT BLVD., BALTIMORE, MD 21222

FORM 31232 Rev. F (March 2023)

 © VULCAN-HART COMPANY 2023

Table of Contents

5 CONTROL PANEL
7 POWER BOX - GAS (ML-126847 & ML-126848)
9 POWER BOXES - ELECTRIC (ML-126849, ML-126850, ML-152047, & ML-152048)
11 LID ASSEMBLY
13 PANELS
15 PAN AND LIFT UNIT
17 BRAISING PANS
19 HEATING ELEMENTS (ML-126849 & ML-126850)
21 HEATING ELEMENTS (ML-152047 & ML-152048) FAST BATCH ELECTRIC - SERIAL # 463025948 STARTING 1/29/18
23 GAS BURNERS (ML-126847 & ML-126848)
25 GAS PIPING (ML-126847 & ML-126848)
27 DRAW-OFF VALVE ASSEMBLY

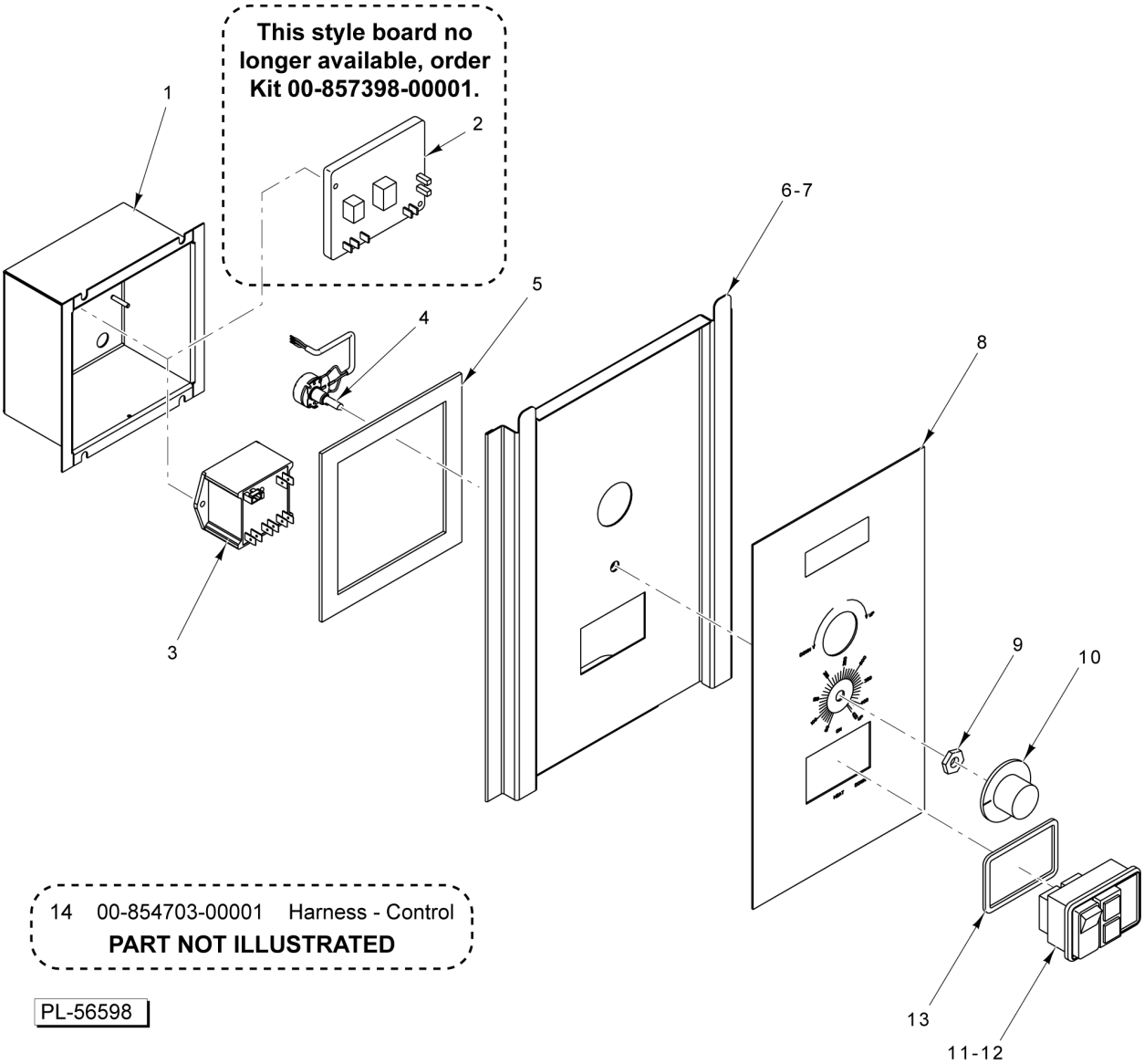

CONTROL PANEL

CONTROL PANEL

ILLUS. PL-56598	PART NO.	NAME OF PART	AMT.
1	00-854817-00001	Box - Control	1
2	00-857398-00001	Kit - Temperature Control Board (Used to replace board used prior to 12-31-07) (Incls. Items 3, 4, & Thermocouple)	1
3	00-857112-00001	Controller - Temperature (Used after 12-31-07 and with Item 4)	1
4	00-857389-00001	Potentiometer (Used after 12-31-07 and with Item 3)	1
5	00-854664-0000U	Gasket	AR
6	00-854814-00001	Panel - Control Weldment (15 In.)	1
7	00-854814-00002	Panel - Control Weldment (21 In.)	1
8	00-854661-00002	Overlay	1
9	00-854693-00001	Seal Nut - Rotary Switch	1
10	00-854647-00001	Knob - Control	1
11	00-854537-00001	Switch - Control (Manual)	1
12	00-854495-00001	Switch - Control (Automatic)	1
13	00-854696-00001	Gasket - Switch	1
14	00-854703-00001	Harness - Control	1

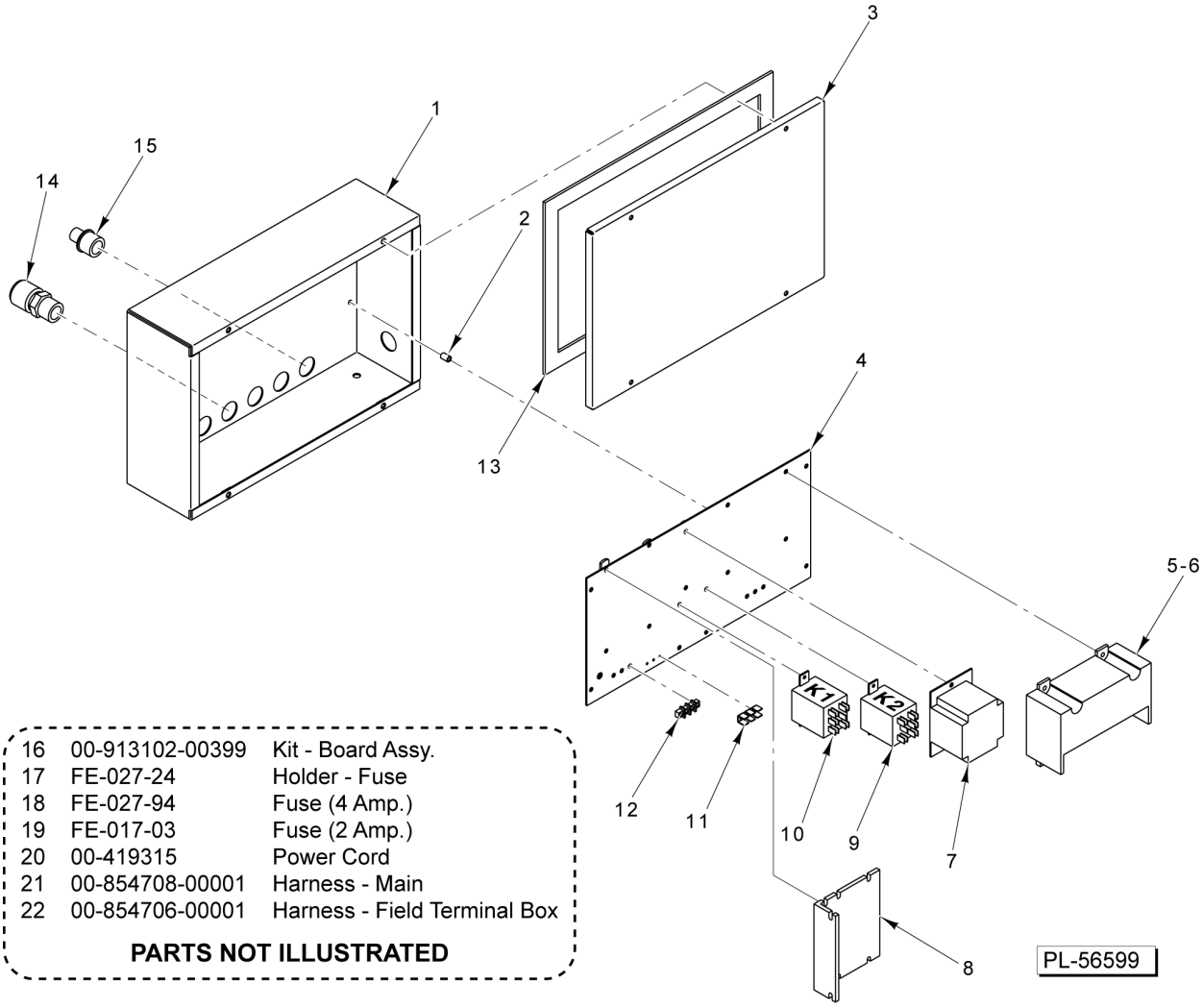

16	00-913102-00399	Kit - Board Assy.
17	FE-027-24	Holder - Fuse
18	FE-027-94	Fuse (4 Amp.)
19	FE-017-03	Fuse (2 Amp.)
20	00-419315	Power Cord
21	00-854708-00001	Harness - Main
22	00-854706-00001	Harness - Field Terminal Box

PARTS NOT ILLUSTRATED

POWER BOX - GAS
(ML-126847 & ML-126848)

POWER BOX - GAS
(ML-126847 & ML-126848)

ILLUS. PL-56599	PART NO.	NAME OF PART	AMT.
1	00-854633-00001	Box - Weldment (Power)	1
2	00-853781-00001	Standoff (Power Box)	4
3	00-854637-00001	Cover - Box	1
4	00-854635-00001	Panel - Component (Before S/N 463030592)	1
5	00-857207-00001	Module - Ignition (Honeywell) (Before S/N 463021794)	1
6	00-858480-00001	Module - Ignition (Fenwal) (S/N 463021794 thru S/N 463030592)	1
7	00-411500-00012	Transformer (120 VAC, 24 V., 40 VA) (Before S/N 463030592)	1
8	00-854671-00001	Controller - Speed (Auto-Lift) (Before S/N 463030592)	1
9	00-854545-00001	Relay (Up) (Auto-Lift) (Before S/N 463030592)	1
10	00-854545-00001	Relay (Down) (Auto-Lift) (Before S/N 463030592)	1
11	00-419317	Terminal - Stationary (Male) (Before S/N 463030592)	1
12	00-854707-00002	Block - Terminal (2-Pole) (Before S/N 463030592)	1
13	00-854664-0000U	Gasket	AR
14	00-854761-00002	Relief - Strain 1/2 Electrical	1
15	00-854764-00001	Plug - Strain Relief	1
16	00-913102-00399	Kit - Board Assy. (Incls. Items 17 thru 19) (Starting S/N 463030592)	AR
17	FE-027-24	Holder - Fuse (Starting S/N 463030592)	AR
18	FE-024-94	Fuse (4 Amp.) (Starting S/N 463030592)	AR
19	FE-017-03	Fuse (2 Amp.) (Starting S/N 463030592)	AR
20	00-419315	Power Cord	1
21	00-854708-00001	Harness - Field Terminal Box (Gas)	1
22	00-854706-00001	Harness - Lift Motor (Optional)	1

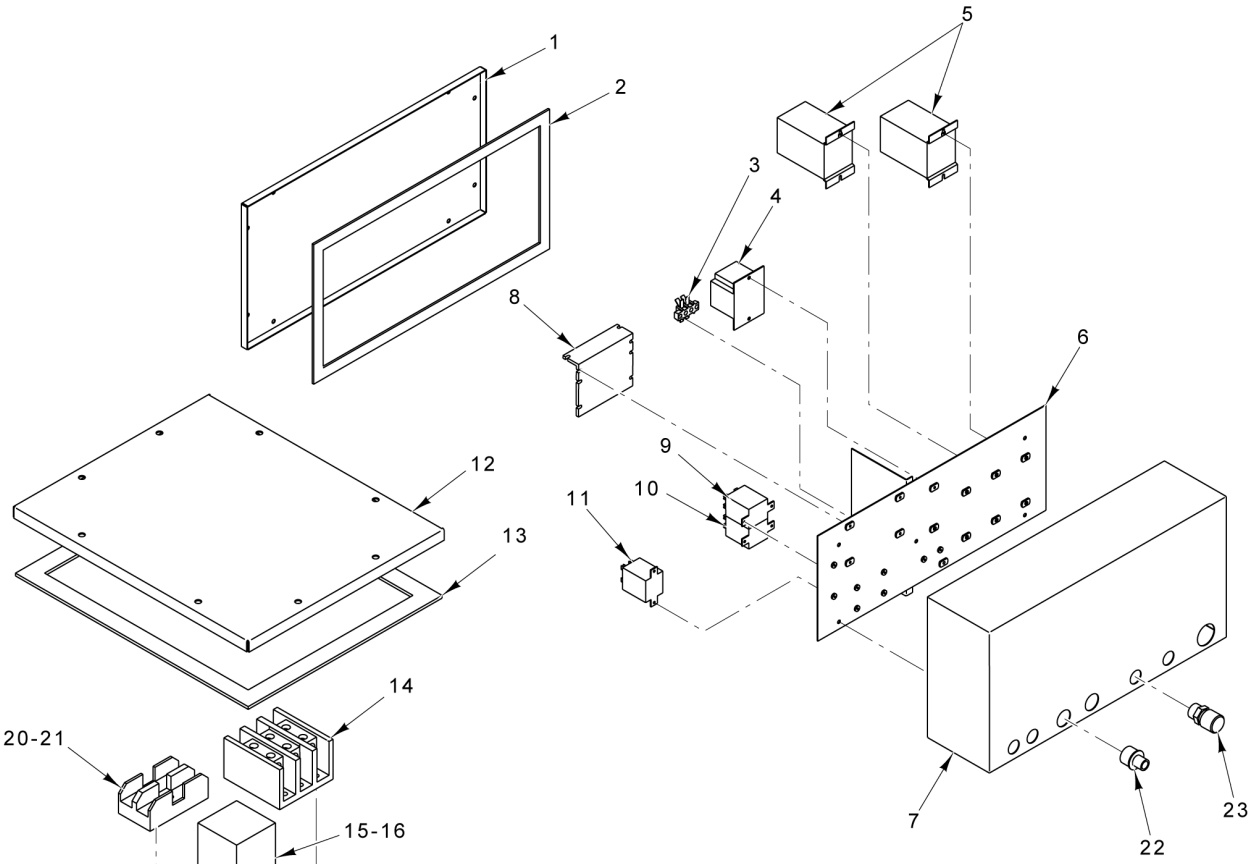

MAIN POWER BOX

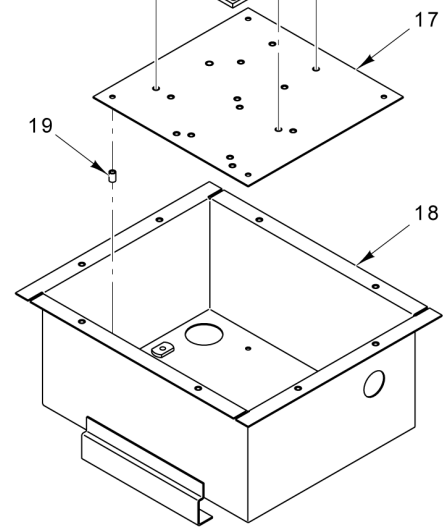

FIELD WIRING

24	00-913102-00399	Kit - Board Assy.
25	FE-027-24	Holder - Fuse
26	FE-027-94	Fuse (4 Amp.)
27	FE-017-03	Fuse (2 Amp.)
28	00-854711-00001	Harness - Main
29	00-854706-00001	Harness - Lift Motor
30	00-854716-00001	Harness - Power (40 Gallon)
31	00-854716-00002	Harness - Power (30 Gallon)
32	00-854703-00001	Harness - Control
33	00-854713-00002	Harness - Element

PARTS NOT ILLUSTRATED

PL-56644

POWER BOXES - ELECTRIC
(ML-126849, ML-126850, ML-152047, & ML-152048)

POWER BOXES - ELECTRIC
(ML-126849, ML-126850, ML-152047, & ML-152048)

ILLUS. PL-56644	PART NO.	NAME OF PART	AMT.
1	00-854609-00001	Lid - Box (Main)	1
2	00-854664-0000U	Gasket	AR
3	00-854707-00002	Block - Terminal (2-Pole) (Before S/N 463030592)	1
4	00-411500-00012	Transformer (120 VAC, 24 V., 40 VA) (Before S/N 463030592)	1
5	00-840115	Contactor (25 Amp.)	AR
6	00-854554-00001	Panel - Component (Main) (Before S/N 463030592)	1
7	00-854607-00001	Box - Power (Main)	1
8	00-854671-00001	Controller - Speed (Auto-Lift) (Before S/N 463030592)	1
9	00-854545-00001	Relay (Up) (Auto-Lift) (Before S/N 463030592)	1
10	00-854545-00001	Relay (Down) (Auto-Lift) (Before S/N 463030592)	1
11	00-854545-00001	Relay (Before S/N 463030592)	1
12	00-855037-00001	Lid - Box (Field Wiring)	1
13	00-854664-0000U	Gasket	AR
14	00-410472-00008	Block - Terminal (3-Pole)	1
15	00-855036-00001	Transformer (240 V.)	1
16	00-855035-00001	Transformer (240 V.) (Auto-Lift)	1
17	00-855033-00001	Panel - Component (Field Wiring)	1
18	00-855031-00001	Box - Power (Field Wiring)	1
19	00-853781-00001	Standoff	4
20	00-855028-00001	Block - Fuse	1
21	00-423986-00001	Fuse (KTK-R-3)	2
22	00-854764-00001	Plug - Strain Relief	AR
23	00-854761-00001	Relief - Strain (1/4 In.)	6
24	00-913102-00399	Kit - Board Assy. (Incls. Items 25 thru 27) (Starting S/N 463030592)	AR
25	FE-027-24	Holder - Fuse (Starting S/N 463030592)	AR
26	FE-024-94	Fuse (4 Amp.) (Starting S/N 463030592)	AR
27	FE-017-03	Fuse (2 Amp.) (Starting S/N 463030592)	AR
28	00-854711-00001	Harness - Main (Electric)	1
29	00-854706-00001	Harness - Lift Motor (Optional)	1
30	00-854716-00001	Harness - Power (40 Gallon)	1
31	00-854716-00002	Harness - Power (30 Gallon)	1
32	00-854703-00001	Harness - Control	1
33	00-854713-00002	Harness - Element	1

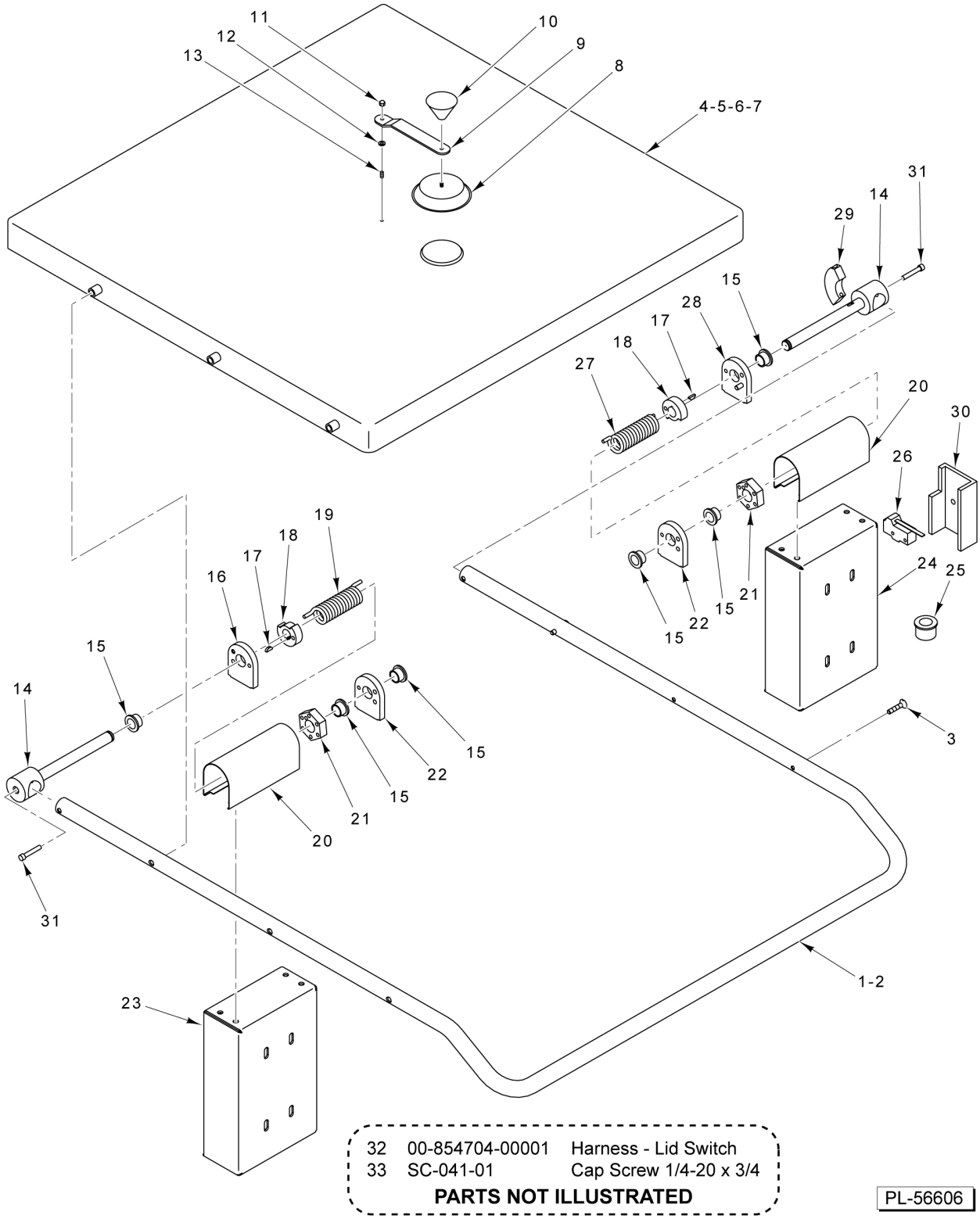

32	00-854704-00001	Harness - Lid Switch
33	SC-041-01	Cap Screw 1/4-20 x 3/4

PARTS NOT ILLUSTRATED

PL-56606

LID ASSEMBLY

LID ASSEMBLY

ILLUS. PL-56606	PART NO.	NAME OF PART	AMT.
1	00-854573-00001	Handle - Lid (30 Gallon)	1
2	00-854573-00002	Handle - Lid (40 Gallon)	1
3	SC-023-23	Mach. Screw 1/4-20 x 1-1/4 Slotted Oval Hd. (SST)	6
4	00-854578-00001	Lid (Without Vent) (30 Gallon)	1
5	00-854578-00002	Lid (With Vent) (30 Gallon)	1
6	00-854579-00001	Lid (Without Vent) (40 Gallon)	1
7	00-854579-00002	Lid (With Vent) (40 Gallon)	1
8	00-358004-00001	Cover - Vent (Optional)	1
9	00-358005	Spring - Vent Cover (Optional)	1
10	00-120054-00002	Knob - Vent (Optional)	1
11	NS-025-04	Crown Nut 1/4-20 (SST)	1
12	WS-022-06	Washer (SST)	4
13	00-911035-00004	Stud 1/4-20 x 1/2	1
14	00-854561-00001	Mandrel - Lid Spring	2
15	00-854567-00001	Bearing - Lid	6
16	00-854639-00001	Housing Assy. - Lid Bearing (LH)	1
17	KW-003-04	Key 1/8 x 1/2	2
18	00-854564-00001	Retainer - Lid Spring	2
19	00-854569-00001	Spring - Torsion (LH)	1
20	00-854558-00001	Lid - Bearing Cover	2
21	00-854565-00001	Lock Nut - Lid Spring	2
22	00-854562-00001	Housing - Lid Bearing	2
23	00-854559-00001	Bracket - Lid Support (LH)	AR
24	00-854559-00002	Bracket - Lid Support (RH)	1
25	00-854765-00001	Bushing - Snap (Auto-Lift)	1
26	00-411496-000F1	Switch - Micro (Auto-Lift)	1
27	00-854569-00002	Spring - Torsion (RH)	1
28	00-854639-00002	Housing Assy. - Lid Bearing (RH)	1
29	00-854804-00001	Trigger - Lid Switch (Auto-Lift)	1
30	00-854589-00001	Cover - Lid Switch	1
31	00-854678-00001	Lock Pin	2
32	00-854704-00001	Harness - Lid Switch	1
33	SC-041-01	Cap Screw 1/4-20 x 3/4 Hex Hd. (SST)	8

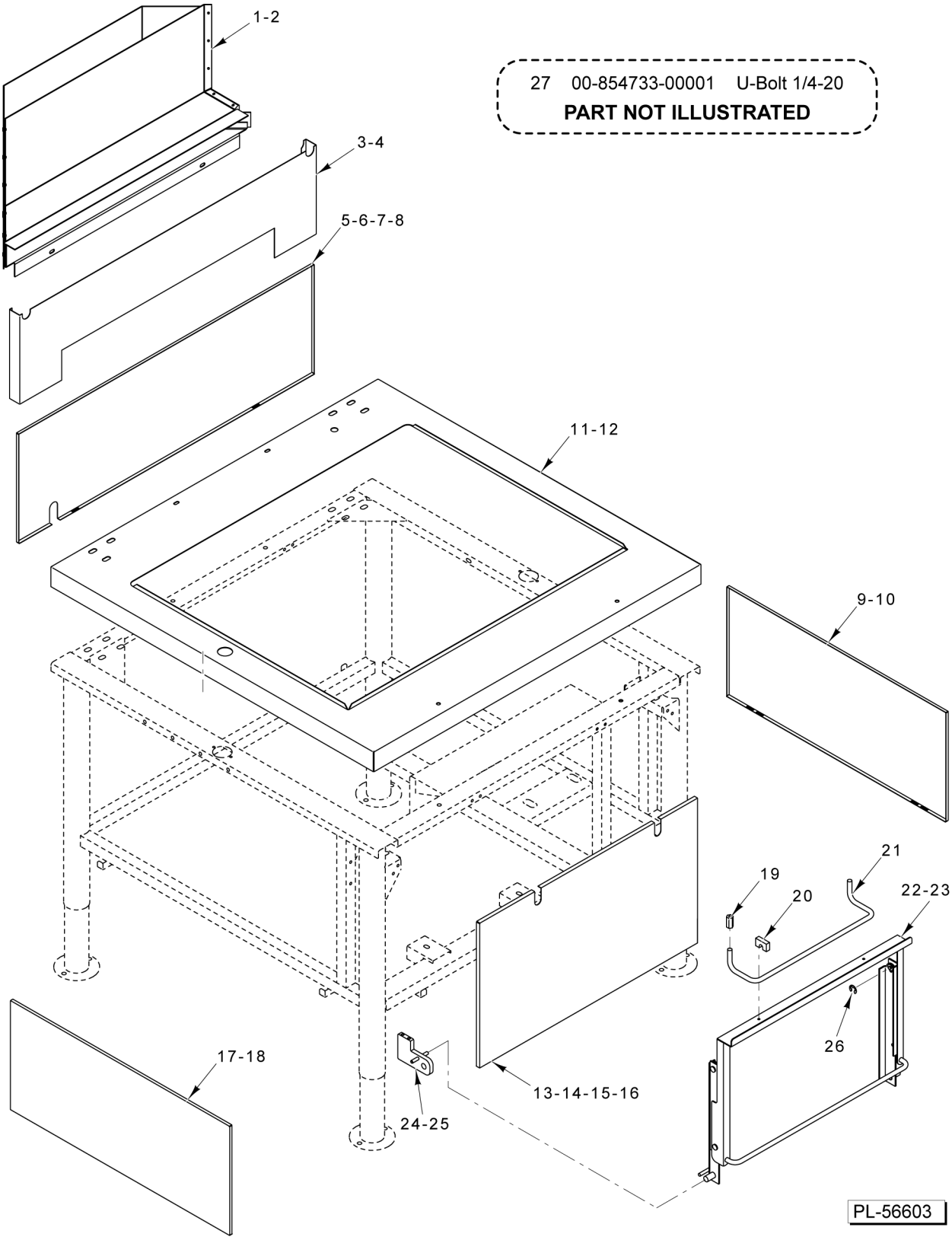

27 00-854733-00001 U-Bolt 1/4-20

PART NOT ILLUSTRATED

PANELS

PANELS

ILLUS. PL-56603	PART NO.	NAME OF PART	AMT.
1	00-854550-00001	Flue Assy. (30 Gallon) (ML-126847)	1
2	00-854555-00001	Flue Assy. (40 Gallon) (ML-126848)	1
3	00-854546-00001	Back Splash Assy. (30 Gallon)	1
4	00-854547-00001	Back Splash Assy. (40 Gallon)	1
5	00-854585-00002	Panel - Back (30 Gallon)	1
6	00-854585-00003	Panel - Back (40 Gallon)	1
7	00-854881-00003	Panel - Back (30 Gallon) (Modular)	1
8	00-854881-00004	Panel - Back (40 Gallon) (Modular)	1
9	00-854585-00001	Panel - Side (15 In.)	1
10	00-854881-00005	Panel - Side (Modular) (21 In.)	1
11	00-854508-00001	Table - Top (30 Gallon)	1
12	00-854506-00001	Table - Top (40 Gallon)	1
13	00-854587-00001	Panel - Front (30 Gallon)	1
14	00-854587-00002	Panel - Front (40 Gallon)	1
15	00-854881-00001	Panel - Front (30 Gallon) (Modular)	1
16	00-854881-00002	Panel - Front (40 Gallon) (Modular)	1
17	00-854585-00001	Panel - Side (15 In.)	1
18	00-854881-00005	Panel - Side (Modular) (21 In.)	1
19	00-854752-00001	Nut - Reducing	2
20	00-854684-00001	Clamp - Pan Hanger	2
21	00-854689-00001	Hanger - Pan	1
22	00-854720-00001	Hanger - Pan Assy. (Before S/N 463017108)	1
23	00-858151-00001	Hanger - Pan Assy. (Starting S/N 463017108)	1
24	00-854697-00001	Support - Pan Hanger (Before S/N 463017108)	2
25	00-858140-00001	Support - Pan Hanger (Starting S/N 463017108)	2
26	RR-010-12	Retaining Ring	2
27	00-854733-00001	U-Bolt 1/4-20 (Gas Only)	2

18	00-854666-00001	Strainer - Pour Lip
19	00-854751-00001	Cover - Thermocouple Insulation
20	00-854674-00001	Clamp - Holder
21	00-854619-00001	Clip - Thermocouple
22	00-854614-00001	Support - Thermocouple
23	00-854613-00001	Bracket - Thermocouple
24	00-854543-00001	Bracket - Insulation Cover
25	00-854705-00001	Harness - Up Limit Switch
26	00-854739-00001	Harness - Pan Switch (Cable)
27	00-854584-00001	Pin - Clevis
28	00-855552-00001	Power Lift Kit (Electric)
29	00-855552-00002	Power Lift Kit (Gas)

PARTS NOT ILLUSTRATED

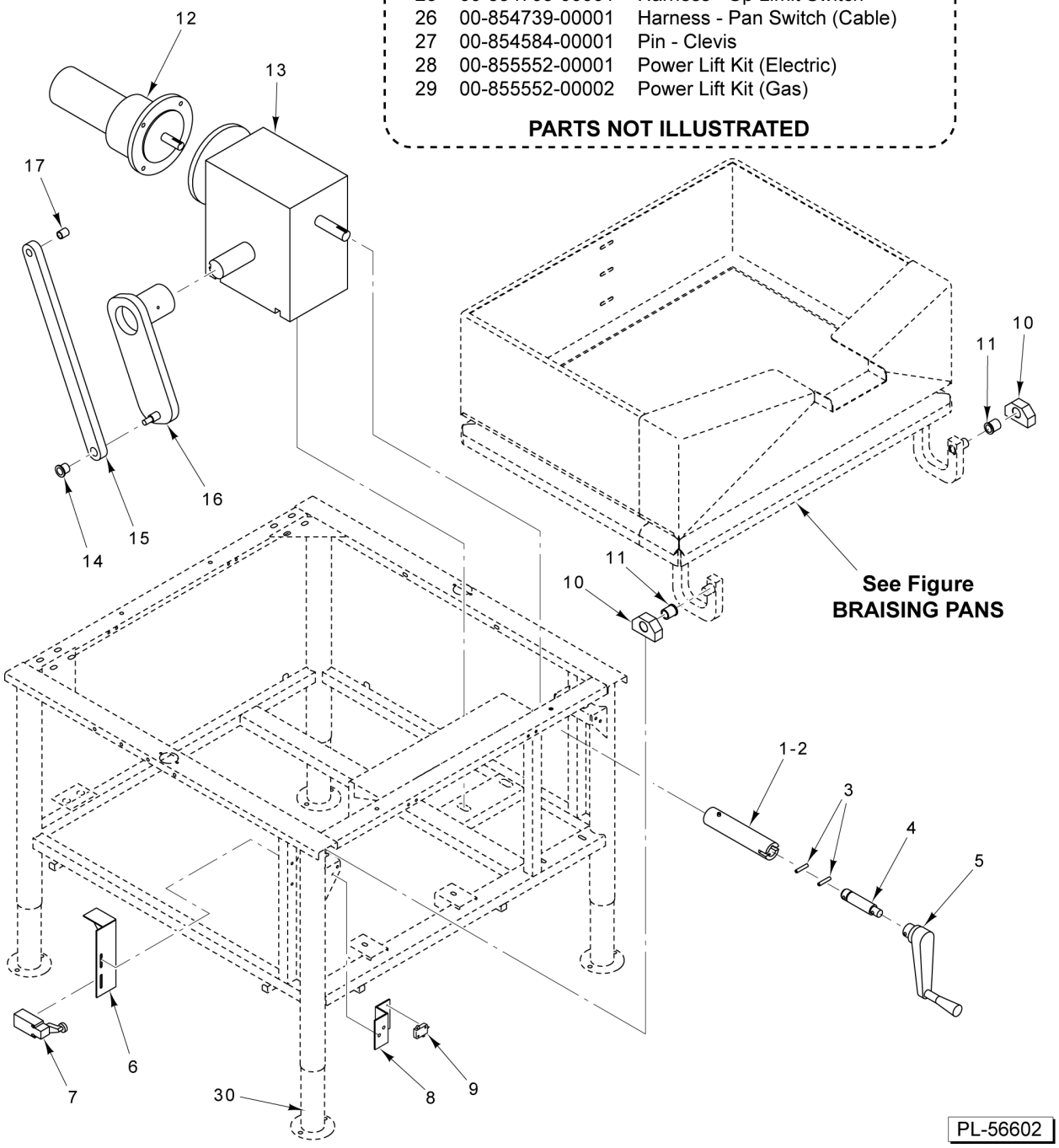

PAN AND LIFT UNIT

PAN AND LIFT UNIT

ILLUS. PL-56602	PART NO.	NAME OF PART	AMT.
1	00-854648-00001	Extension - Shaft (Gear Reducer) (Before 12-01-03)	1
2	00-854644-00001	Extension - Shaft (Gear Reducer) (Starting 12-01-03)	1
3	RP-002-46	Pin - Roll	2
4	00-854652-00001	Shaft - Handle	1
5	00-854651-00001	Handle - Crank	1
6	00-858047-00001	Bracket - Limit Switch	1
7	00-854517-00001	Switch - Limit	1
8	00-854611-00001	Bracket - Up Switch (Auto-Lift)	1
9	00-411496-000F3	Microswitch (Auto-Lift)	1
10	00-854507-00001	Block - Bearing	2
11	00-854617-00001	Bearing	2
*12	00-854653-00001	Motor - Gear (Auto-Lift)	1
13	00-857770-00001	Gear - Reducer	1
14	00-854654-00001	Bearing - Lift Arm	1
15	00-854514-00001	Arm - Lift	1
16	00-854580-00001	Crank Assy	1
17	00-854655-00001	Bearing - Lift Arm (Pan Side)	1
18	00-854666-00001	Strainer - Pour Lip	1
19	00-854751-00001	Cover - Thermocouple Insulation	2
20	00-854674-00001	Clamp - Holder	AR
21	00-854619-00001	Clip - Thermocouple	1
22	00-854614-00001	Support - Thermocouple	1
23	00-854613-00001	Bracket - Thermocouple	1
24	00-854543-00001	Bracket - Insulation Cover	4
25	00-854705-00001	Harness - Up Limit Switch (Auto-Lift) (Optional)	1
26	00-854739-00001	Harness - Pan Switch (Cable)	1
27	00-854584-00001	Pin - Clevis 1/2 x 2 In. (Lift Arm to Pan)	1
28	00-855552-00001	Power Lift Kit (Electric)	1
**29	00-855552-00002	Power Lift Kit (Gas)	1
30	00-854645-00002	Leg (includes adjustable leg and flanged foot)	AR

* Use Kit 00-913102-00399 replacing motor
** No Longer Available

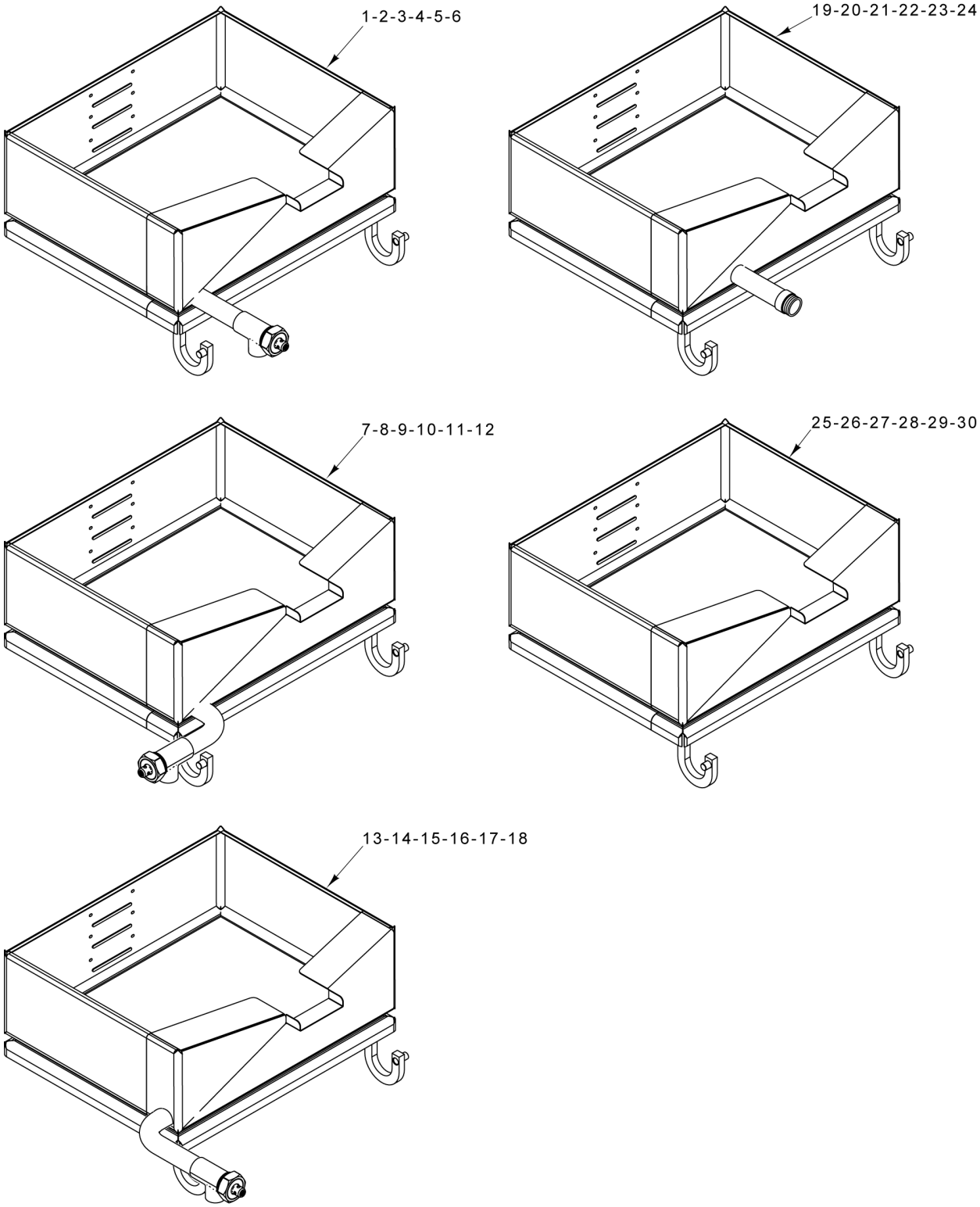

BRAISING PANS

BRAISING PANS

ILLUS. PL-60936	PART NO.	NAME OF PART	AMT.
*1	00-854745-00001	Pan - Braising (2 In. Draw-Off Valve) (Left Front Straight) (ML-126849) (VE30)	1
**2	00-854742-00001	Pan - Braising (2 In. Draw-Off Valve) (Left Front Straight) (ML-126850) (VE40)	1
***3	00-854745-00002	Pan - Braising (2 In. Draw-Off Valve) (Left Front Straight) (ML-126847) (VG30)	1
****4	00-854742-00002	Pan - Braising (2 In. Draw-Off Valve) (Left Front Straight) (ML-126848) (VG40)	1
*5	00-858602-00002	Pan - Braising (2 In. Draw-Off Valve) (Left Front Straight) (ML-152047) (VE30 Fast Batch)	1
**6	00-858615-00002	Pan - Braising (2 In. Draw-Off Valve) (Left Front Straight) (ML-152048) (VE40 Fast Batch)	1
*7	00-854745-00003	Pan - Braising (2 In. Draw-Off Valve) (Left Front 90 Deg. Left) (ML-126849) (VE30)	1
**8	00-854742-00003	Pan - Braising (2 In. Draw-Off Valve) (Left Front 90 Deg. Left) (ML-126850) (VE40)	1
***9	00-854745-00004	Pan - Braising (2 In. Draw-Off Valve) (Left Front 90 Deg. Left) (ML-126847) (VG30)	1
****10	00-854742-00004	Pan - Braising (2 In. Draw-Off Valve) (Left Front 90 Deg. Left) (ML-126848) (VG40)	1
*11	00-858602-00003	Pan - Braising (2 In. Draw-Off Valve) (Left Front 90 Deg. Left) (ML-152047) (VE30 Fast Batch)	1
**12	00-858615-00003	Pan - Braising (2 In. Draw-Off Valve) (Left Front 90 Deg. Left) (ML-152048) (VE40 Fast Batch)	1
*13	00-854745-00005	Pan - Braising (2 In. Draw-Off Valve) (Left Side 90 Deg. Front) (ML-126849) (VE30)	1
**14	00-854742-00005	Pan - Braising (2 In. Draw-Off Valve) (Left Side 90 Deg. Front) (ML-126850) (VE40)	1
***15	00-854745-00006	Pan - Braising (2 In. Draw-Off Valve) (Left Side 90 Deg. Front) (ML-126847) (VG30)	1
****16	00-854742-00006	Pan - Braising (2 In. Draw-Off Valve) (Left Side 90 Deg. Front) (ML-126848) (VG40)	1
*17	00-858602-00004	Pan - Braising (2 In. Draw-Off Valve) (Left Side 90 Deg. Front) (ML-152047) (VE30 Fast Batch)	1
**18	00-858615-00004	Pan - Braising (2 In. Draw-Off Valve) (Left Side 90 Deg. Front) (ML-152048) (VE40 Fast Batch)	1
*19	00-854745-00007	Pan - Braising (SEF Draw-Off Valve) (ML-126849) (VE30)	1
**20	00-854742-00007	Pan - Braising (SEF Draw-Off Valve) (ML-126850) (VE40)	1
***21	00-854745-00008	Pan - Braising (SEF Draw-Off Valve) (ML-126847) (VG30)	1
****22	00-854742-00008	Pan - Braising (SEF Draw-Off Valve) (ML-126848) (VG40)	1
*23	00-858602-00005	Pan - Braising (SEF Draw-Off Valve) (ML-152047) (VE30 Fast Batch)	1
**24	00-858615-00005	Pan - Braising (SEF Draw-Off Valve) (ML-152048) (VE40 Fast Batch)	1
*25	00-854600-00001	Pan - Braising (No Draw-Off Valve) (ML-126849) (VE30)	1
**26	00-854641-00001	Pan - Braising (No Draw-Off Valve) (ML-126850) (VE40)	1
***27	00-854600-00002	Pan - Braising (No Draw-Off Valve) (ML-126847) (VG30)	1
****28	00-854641-00002	Pan - Braising (No Draw-Off Valve) (ML-126848) (VG40)	1
*29	00-858602-00001	Pan - Braising (No Draw-Off Valve) (ML-152047) (VE30 Fast Batch)	1
**30	00-858615-00001	Pan - Braising (No Draw-Off Valve) (ML-152048) (VE40 Fast Batch)	1
31	SC 66-06	10-24 x 1/2" Not Shown in Art	1
32	00-854766-0001	Speed Nut, J Type 1024 Not Shown in Art	1
33	00-854600-00002	Pan - Braising Not Shown in Art	1

* Electric, 30 Gallon
** Electric, 40 Gallon
*** Gas, 30 Gallon
**** Gas, 40 Gallon

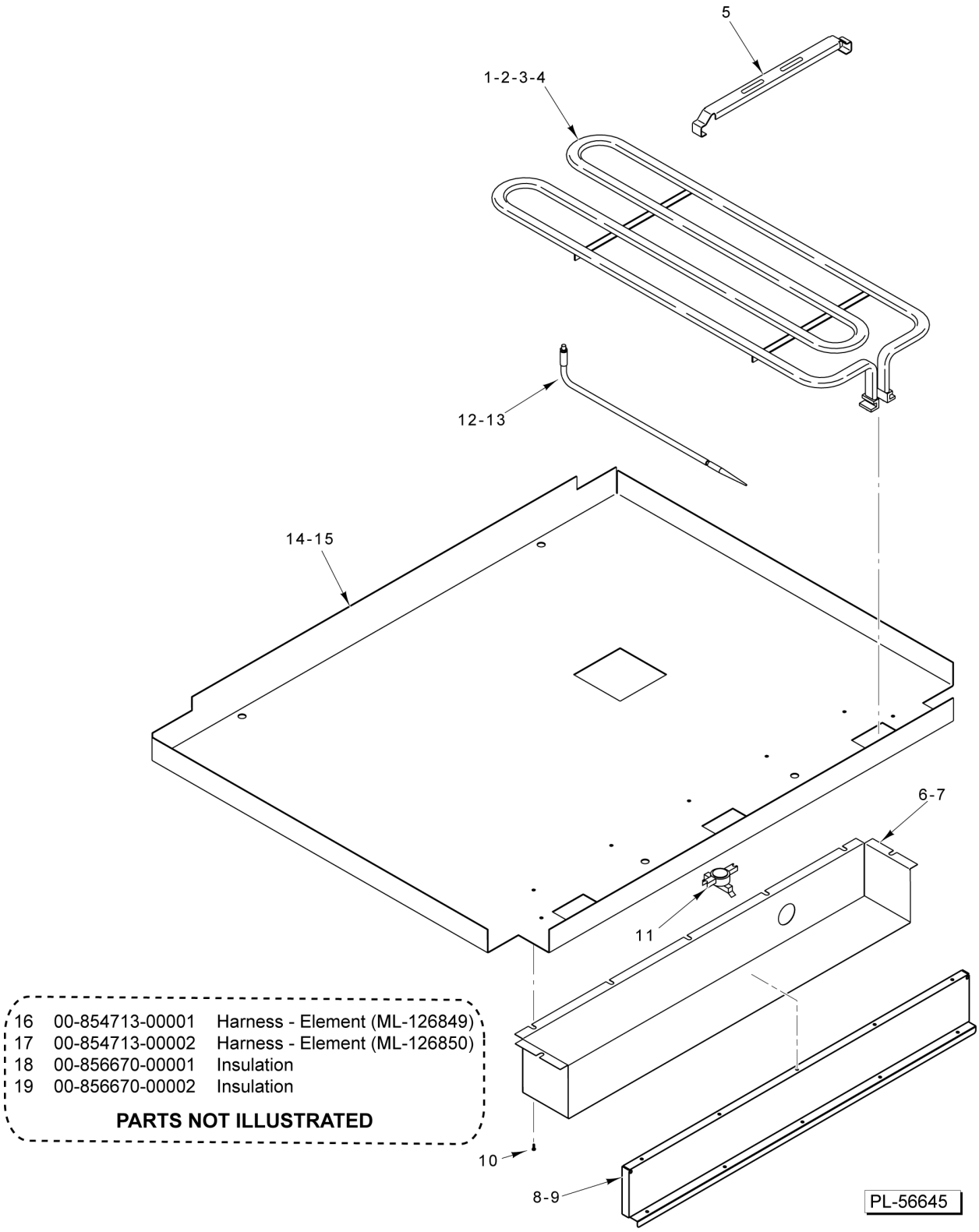

16	00-854713-00001	Harness - Element (ML-126849)
17	00-854713-00002	Harness - Element (ML-126850)
18	00-856670-00001	Insulation
19	00-856670-00002	Insulation

PARTS NOT ILLUSTRATED

HEATING ELEMENTS
(ML-126849 & ML-126850)

HEATING ELEMENTS
(ML-126849 & ML-126850)

ILLUS. PL-56645	PART NO.	NAME OF PART	AMT.
1	00-854511-00001	Element - Heating (240 V.) (ML-126849 = 3; ML-126850 = 4)	AR
2	00-857500-00001	Kit - Heating Element (480 V.) (ML-126849) (Before S/N 271177780)	3
3	00-857500-00002	Kit - Heating Element (480 V.) (ML-126850) (Before S/N 271177780)	4
4	00-855529-00001	Element - Heating (480 V.) (ML-126849 = 3; ML-126850 = 4) (Starting S/N 271177780)	AR
5	00-854509-00001	Clamp - Heater (ML-126849 = 12; ML-126850 = 16)	AR
6	00-854544-00001	Cover - Harness (ML-126849)	1
7	00-854544-00002	Cover - Harness (ML-126850)	1
8	00-854549-00001	Cover - Harness (ML-126849)	1
9	00-854549-00002	Cover - Harness (ML-126850)	1
10	SD-034-21	Self-Tapping Screw 10-16 x 1/2 Slotted. Hex Washer Hd., Type AB	AR
11	00-821762	Thermostat - Hi-Limit	1
12	00-854646-00001	Thermocouple (E-Type) (Before 12-31-07) (Used with Watlow Temperature controller.)	1
13	00-857388-00001	Thermocouple (K-Type) (Starting 12-31-07) (Used with Crydom Temperature control.)	1
14	00-854542-00001	Cover - Insulation (ML-126849)	1
15	00-854542-00002	Cover - Insulation (ML-126850)	1
16	00-854713-00001	Harness - Element (ML-126849)	1
17	00-854713-00002	Harness - Element (ML-126850)	1
18	00-856670-00001	Insulation	AR
19	00-856670-00002	Insulation	AR

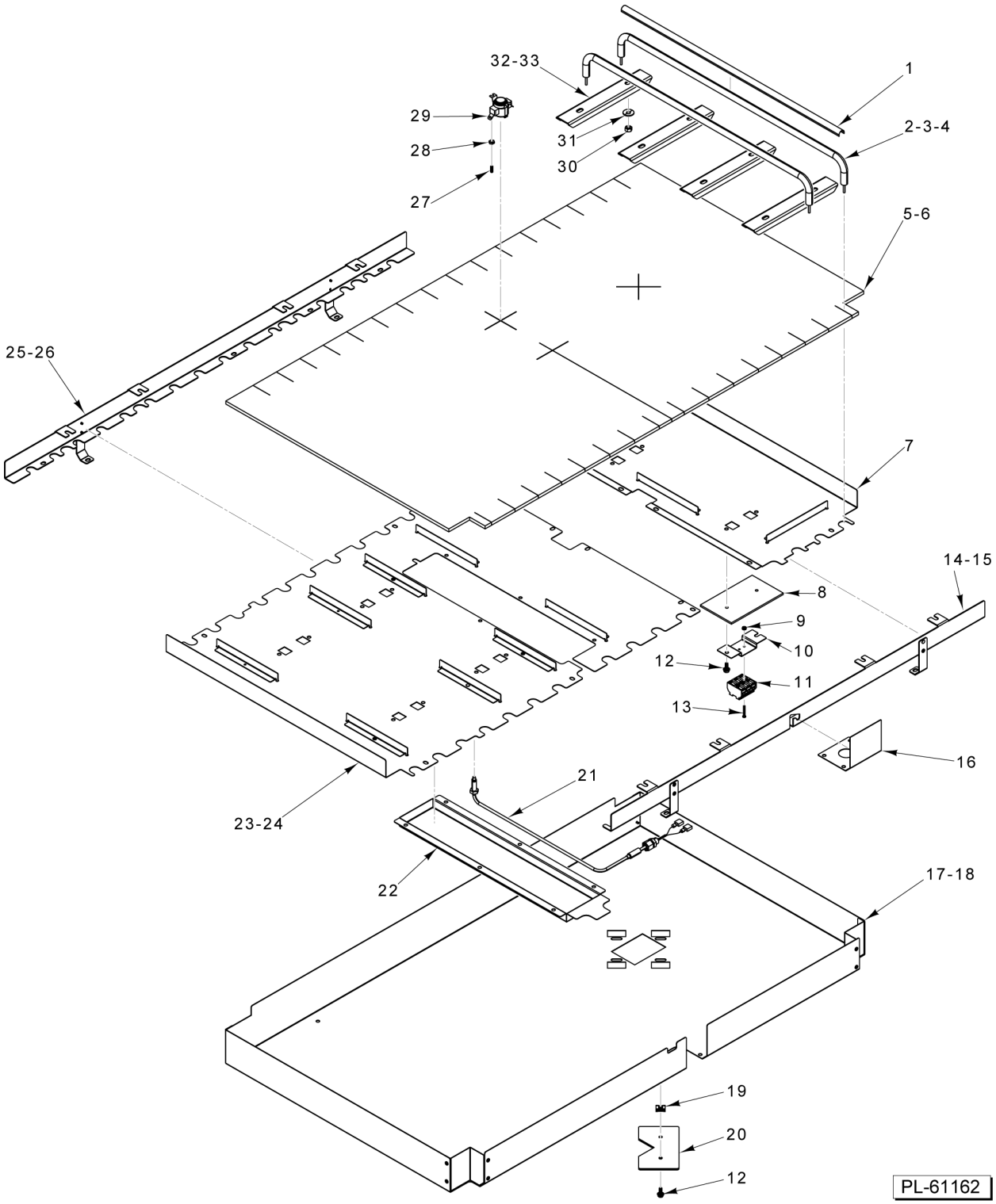

HEATING ELEMENTS
(ML-152047 & ML-152048) FAST BATCH ELECTRIC - SERIAL # 463025948 STARTING 1/29/18

HEATING ELEMENTS
(ML-152047 & ML-152048) FAST BATCH ELECTRIC - SERIAL # 463025948 STARTING 1/29/18

ILLUS. PL-61162	PART NO.	NAME OF PART	AMT.
1	00-858619-00001	Heat Conductor, Copper (ML-152047 = 12; ML-152048 = 16)	AR
2	00-858597-00001	Heater, BP (208 V.) (ML-152047 = 12; ML-152048 = 16)	AR
3	00-858597-00002	Heater, BP (240 V.) (ML-152047 = 12; ML-152048 = 16)	AR
4	00-858597-00003	Heater, BP (480 V.) (ML-152047 = 12; ML-152048 = 16)	AR
5	00-858626-00001	Insulation (ML-152047)	1
6	00-858627-00001	Insulation (ML-152048)	1
7	00-858609-00001	Shield - Insulation	1
8	00-858574-00001	Shield - Insulation	6
9	NS-049-47	Lock Nut 4-40	12
10	00-858563-00001	Bracket - Terminal Block	6
11	00-858564-00001	Terminal Block, 3-Pole	6
12	SC-132-38	Screw - Hex Serrated 10/24 x 1/2	12
13	SC-113-19	Mach. Screw 4-40 x 7/8 Phil. Pan Hd	12
14	00-858604-00001	Retainer - Element (ML-152047)	1
15	00-858618-00001	Support - Heater (ML-152048)	1
16	00-858622-00001	Plate - Cover	1
17	00-858616-00001	Cover - Insulation (ML-152047)	1
18	00-858624-00001	Cover - Insulation (ML-152048)	1
19	NS-049-49	Nut #10 Clip-On (Panel)	AR
20	00-858532-00001	Cover - Pan Pivot	2
21	00-857388-00001	Thermocouple (K-Type) Used with Crydom Temperature control)	1
22	00-858612-00001	Cover - Probe	1
23	00-858610-00001	Shield - Insulation (ML-152047)	1
24	00-858621-00001	Shield - Insulation (ML-152048)	1
25	00-858604-00002	Retainer - Element (ML-152047)	1
26	00-858618-00002	Support - Heater (ML-152048)	1
27	SC-075-33	Set Screw 8-32 x 1/2 Hex Hdls., Cup Pt	2
28	NS-010-11	Nut 8-32 Hex (Brass)	2
29	00-821762-00002	Thermostat - High Temp. Limit	1
30	NS-014-01	Nut 1/4-20 Hex (Brass)	AR
31	SL-005-21	Spring - Loading	AR
32	00-858611-00001	Mount - Heater (ML-152047)	16
33	00-858631-00001	Mount - Heater (ML-152048)	16
			AR

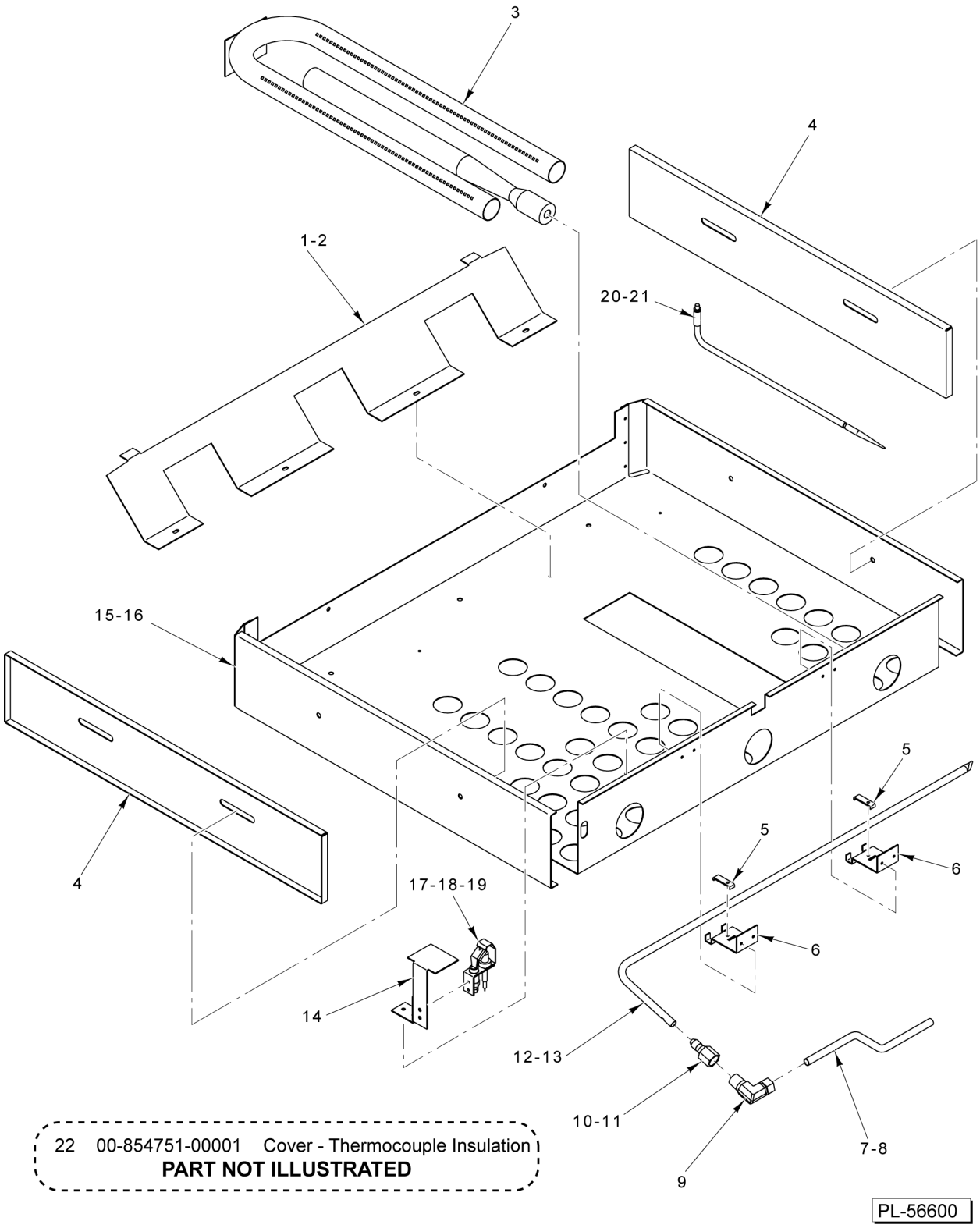

22 00-854751-00001 Cover - Thermocouple Insulation
PART NOT ILLUSTRATED

GAS BURNERS
(ML-126847 & ML-126848)

GAS BURNERS
(ML-126847 & ML-126848)

ILLUS. PL-56600	PART NO.	NAME OF PART	AMT.
1	00-854592-00001	Flue - Transition Plate (ML-126847)	1
2	00-854627-00001	Flue - Transition Plate (ML-126848)	1
3	00-840144	Burner & Air Shuttle Assy. (ML-126847 = 3; ML-126848 = 4)	AR
4	00-854593-00001	Cover - Insulation	2
5	00-854830-00001	Clamp - Runner Tube	2
6	00-854594-00001	Bracket - Runner Tube	2
7	00-854665-00001	Tube - Gas Supply (ML-126847)	1
8	00-854665-00002	Tube - Gas Supply (ML-126848)	1
9	FP-012-21	Elbow 90 Deg. (1/8 Male Pipe x 1/4 Tube)	1
10	00-920186-00014	Orifice - Spud (NAT)	1
11	00-920186-00012	Orifice - Spud (LP)	1
12	00-854626-00001	Tube - Runner (ML-126847)	1
13	00-854626-00002	Tube - Runner (ML-126848)	1
14	00-854595-00001	Bracket - Pilot	1
15	00-854591-00001	Box - Burner (ML-126847)	1
16	00-854625-00001	Box - Burner (ML-126848)	1
17	00-856615-00001	Pilot - Burner (Electronic Ignition) (NAT) (Incls. Ignition Cable)	1
18	00-856615-00002	Pilot - Burner (Electronic Ignition) (LP) (Incls. Ignition Cable)	1
19	00-856616-00001	Kit - Pilot Burner (For units built before S/N 271152844)	1
20	00-854646-00001	Thermocouple (E-Type) (Before 12-31-07) (Used with Watlow Temperature controller.)	1
21	00-857388-00001	Thermocouple (K-Type) (Starting 12-31-07) (Used with Crydom Temperature control).)	1
22	00-854751-00001	Cover - Thermocouple Insulation	2

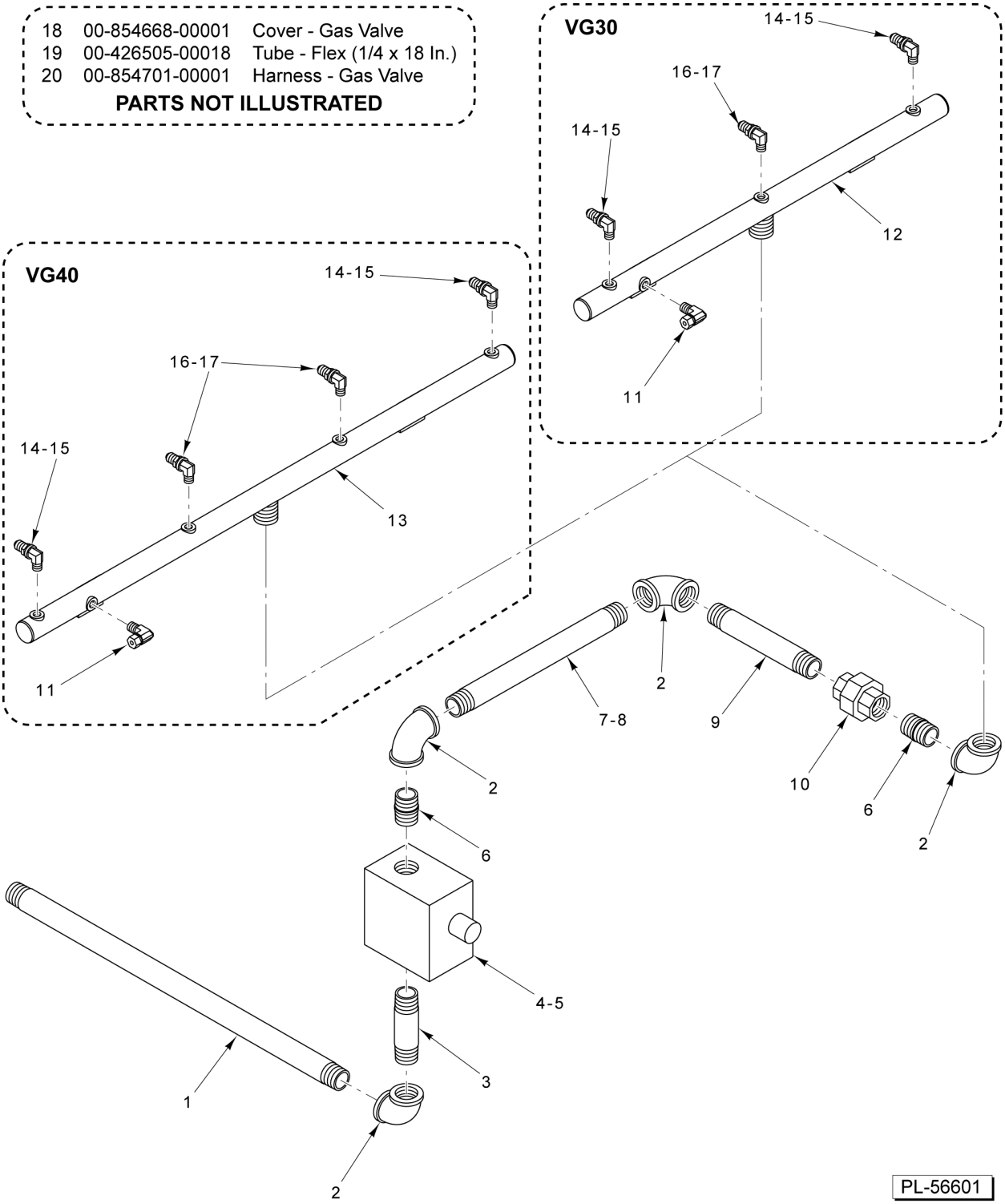

GAS PIPING
(ML-126847 & ML-126848)

GAS PIPING
(ML-126847 & ML-126848)

ILLUS. PL-56601	PART NO.	NAME OF PART	AMT.
1	FP-077-47	Pipe 3/4 x 20-1/4 TBE	1
2	FP-013-22	Elbow Pipe 3/4 x 90 Deg.	4
3	FP-036-06	Pipe 3/4 x 3-1/2 TBE	1
4	00-844133-00001	Valve - Combination (NAT)	1
5	00-844133-00002	Valve - Combination (LP)	1
6	FP-036-92	Pipe 3/4 x 1-3/8 TBE (Black)	2
7	FP-036-98	Pipe 3/4 x 10-1/4 TBE (ML-126847)	1
8	FP-083-52	Pipe 3/4 x 16 TBE (ML-126848)	1
9	FP-059-65	Pipe 3/4 x 6 TBE	1
10	FP-022-17	Union 3/4 (Grd. Seat)	1
11	FP-012-21	Elbow 90 Deg. (1/8 Male Pipe x 1/4 Tube)	1
12	00-854597-00001	Manifold Assy. (ML-126847)	1
13	00-854630-00001	Manifold Assy. (ML-126848)	1
14	00-840096-00037	Fitting - Burner (#37)	AR
15	00-840096-00022	Fitting - Burner (#52)	AR
16	00-840096-00039	Fitting - Burner (#39)	AR
17	00-840096-00050	Fitting - Burner (#50)	AR
18	00-854668-00001	Cover - Gas Valve	1
19	00-426505-00018	Tube - Flex (1/4 x 18 In.)	1
20	00-854701-00001	Harness - Gas Valve	1

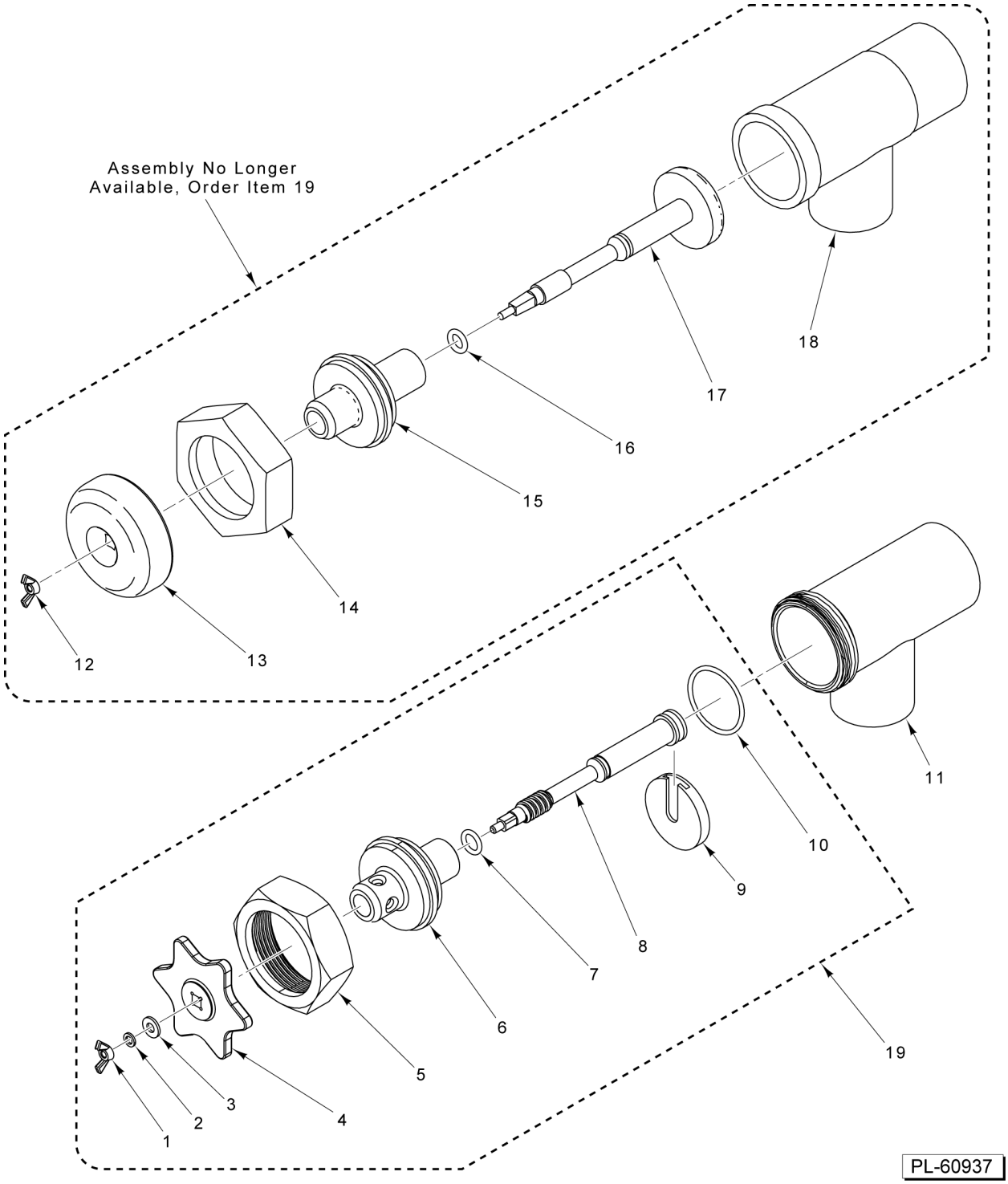

DRAW-OFF VALVE ASSEMBLY

DRAW-OFF VALVE ASSEMBLY

ILLUS. PL-60937	PART NO.	NAME OF PART	AMT.
1	00-857918-00007	Wingnut	1
2	00-857918-00008	Lockwasher	1
3	00-857918-00009	Flatwasher	1
4	00-857918-00006	Handle	1
5	00-857976-00004	Nut - Hex	1
6	00-857976-00003	Retainer	1
7	00-857918-00005	O-Ring	1
8	00-857918-00001	Assy. - 2 In. Stem Plunger	1
9	00-857918-00003	Seal - Nylon (2 In.)	1
10	00-857918-00004	O-Ring - Nylon	1
11	00-857976-00002	Valve Body (2 In.)	1
12	00-854605-00008	Wingnut	1
13	00-854605-00007	Handle	1
14	00-854605-00006	Nut - Hex	1
15	00-854605-00005	Bonnet	1
16	00-854605-00003	O-Ring	1
17	00-854605-00004	Disc & Stem Assy	1
18	00-854605-00002	Valve Body (2 In.)	1
19	00-856213-00001	Draw-Off Valve Assy. (2 In.) (Incls. Items 1 thru 10)	1
20	00-854746-00001	Draw Off Valve Strainer Not Shown in Graphic	AR