CATALOG OF REPLACEMENT PARTS



VCCG SERIES GAS GRIDDLES

VCCG24

VCCG36

VCCG48

VCCG60

VCCG72

TECHNICAL SERVICE AND PARTS ASSISTANCE - US: 1-800-814-2028 | CANADA: 1-800-444-4764 For additional information on Vulcan or to locate an authorized parts and service provider in your area, visit vulcanequipment.com

VULCAN DIVISION OF ITW FOOD EQUIPMENT GROUP, LLC 3600 NORTH POINT BLVD., BALTIMORE, MD 21222

FORM F43294 Rev. B (April 2026)

 © Vulcan 2026

Table of Contents

4 CONTROLS AND GRIDDLE PLATE
6 GAS COMPONENTS (RADIANT)
8 GAS COMPONENTS (INFRARED)

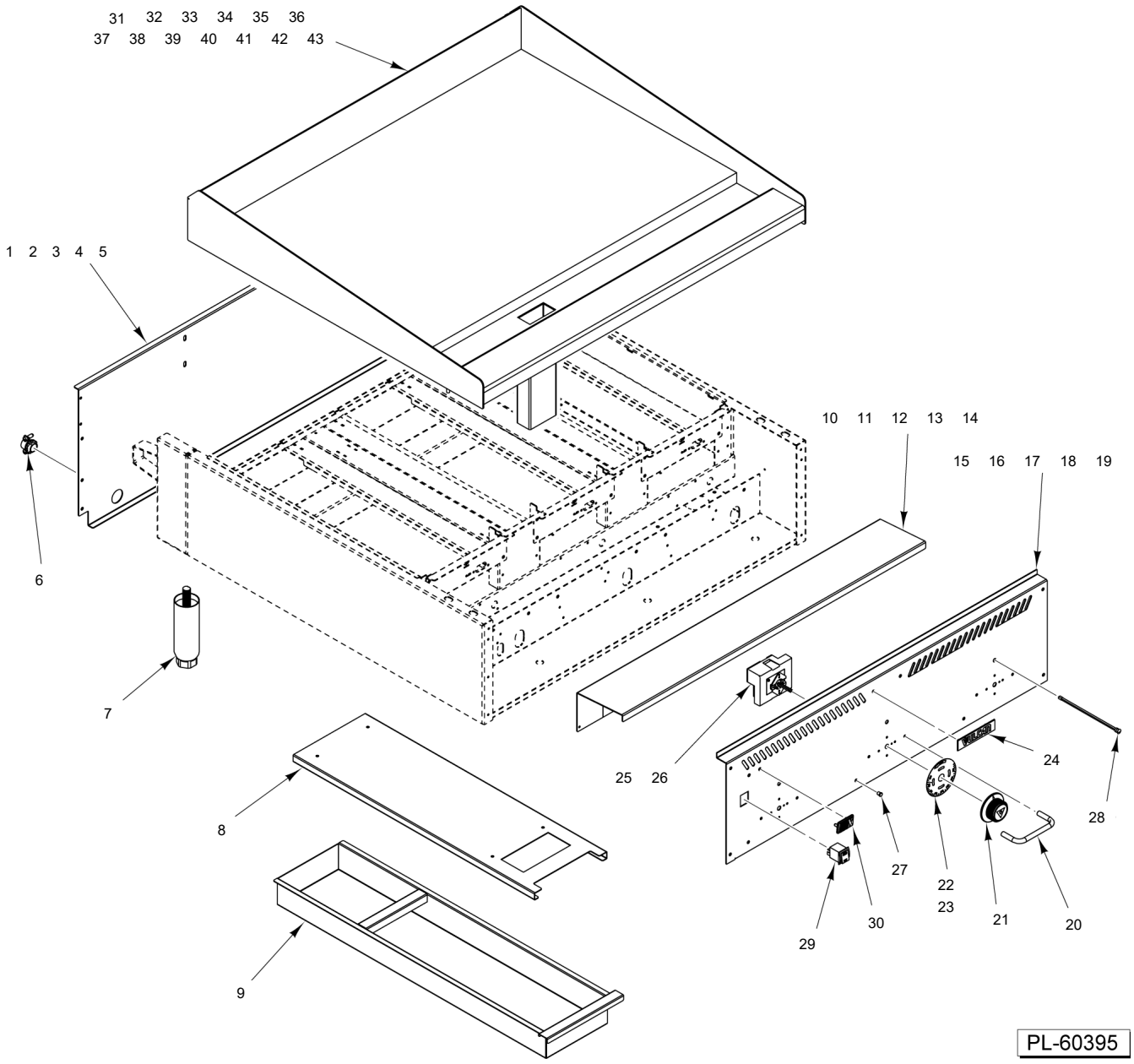

CONTROLS AND GRIDDLE PLATE

CONTROLS AND GRIDDLE PLATE

ILLUS.	PART NO.	NAME OF PART	AMT.
PL-23654			
1	00-944318-00024	Panel - Back (24 In.)	1
2	00-944318-00036	Panel - Back (36 In.)	1
3	00-944318-00048	Panel - Back (48 In.)	1
4	00-944318-00060	Panel - Back (60 In.)	1
5	00-944318-00072	Panel - Back (72 In.)	1
6	00-944526	Cord - Power (120 V.)	1
7	00-723532	Leg - Adjustable (6 In. Lg.)	4
8	00-944320-10001	Bracket - Can Guide	AR
9	00-498082-0000A	Weldment - Grease Can	1
10	00-944521-00024	Deflector - Control (24 In.)	1
11	00-944521-00036	Deflector - Control (36 In.)	1
12	00-944521-00048	Deflector - Control (48 In.)	1
13	00-944521-00060	Deflector - Control (60 In.)	1
14	00-944521-00072	Deflector - Control (72 In.)	1
15	00-944326-00024	Panel - Front (24 In.)	1
16	00-944326-00036	Panel - Front (36 In.)	1
17	00-944326-00048	Panel - Front (48 In.)	1
18	00-944326-00060	Panel - Front (60 In.)	1
19	00-944326-00072	Panel - Front (72 In.)	1
20	00-498690	Guard - Knob	AR
21	00-498041-00012	Knob	AR
22	00-498037-0000A	Dial, 550 Degree (550 Deg.) (Griddle Temperature) (Use With Item 25)	AR
*23	00-498945-0000A	Dial - 450 degree-for use with composite griddle plates. (450 Deg.) (Use With Item 26)	AR
24	00-957916-00003	Nameplate - Small (Vulcan)	1
25	00-944524-00001	Thermostat (550 Deg.) (120 V.)	AR
*26	00-944524-00002	Thermostat (450 Deg.) (120 V.)	AR
27	00-944540	Lens (Clear)	AR
28	00-944539	Indicator (Red)	AR
29	00-810280-00001	Switch - Power	1
**30	00-944264	Logo (VTEC)	1
31		Griddle Plate Assy. (24 In.) (Steel)	1
32		Griddle Plate Assy. (24 In.) (Chrome)	1
33		Griddle Plate Assy. (24 In.) (Composite)	1
34		Griddle Plate Assy. (36 In.) (Steel)	1
35		Griddle Plate Assy. (36 In.) (Chrome)	1
36		Griddle Plate Assy. (36 In.) (Composite)	1
37		Griddle Plate Assy. (48 In.) (Steel)	1
38		Griddle Plate Assy. (48 In.) (Chrome)	1
39		Griddle Plate Assy. (48 In.) (Composite)	1
40		Griddle Plate Assy. (60 In.) (Steel)	1
41		Griddle Plate Assy. (60 In.) (Chrome)	1
42		Griddle Plate Assy. (72 In.) (Steel)	1
43		Griddle Plate Assy. (72 In.) (Chrome)	1

* (Units W/Infrared Burners or Composite Griddle Plate)
** (Infrared Units Only)

32 Harness - Wiring (VCCG24)
33 Harness - Wiring (VCCG36)
34 Harness - Wiring (VCCG48)
35 Harness - Wiring (VCCG60)
36 Harness - Wiring (VCCG72)
37 Insulation

PARTS NOT ILLUSTRATED

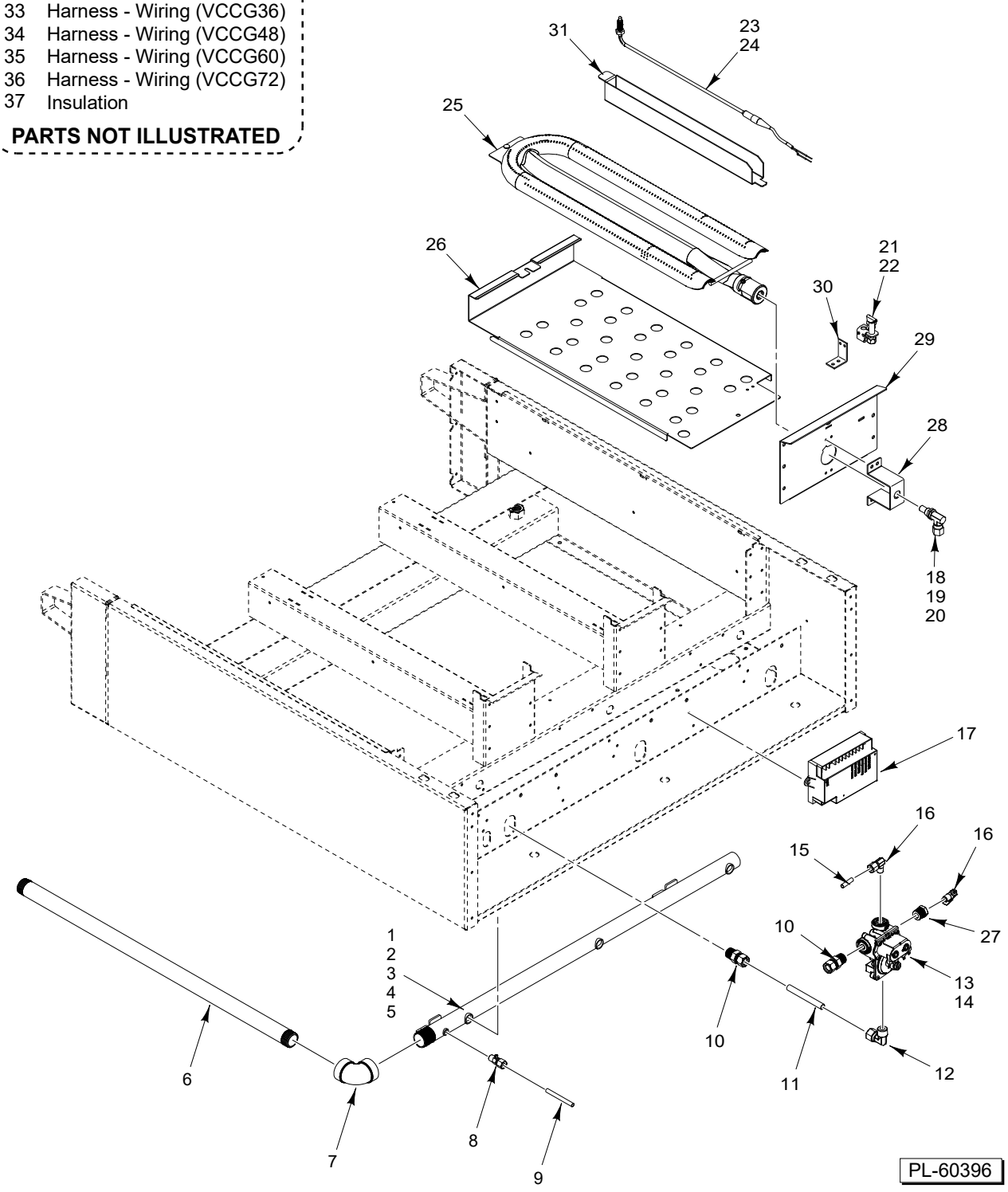

GAS COMPONENTS (RADIANT)

GAS COMPONENTS (RADIANT)

ILLUS.	PART NO.	NAME OF PART	AMT.
PL-23655			
1	00-944519-0024A	Manifold (24 In.)	1
2	00-944519-0036A	Manifold (36 In.)	1
3	00-944519-0048A	Manifold (48 In.)	1
4	00-944519-0060A	Manifold (60 In.)	1
5	00-944519-0072A	Manifold (72 In.)	1
6	00-944523	Pipe	1
7	FP-013-22	Elbow Pipe 3/4 x 90 Deg.	1
8	00-719179	Valve - Single Pilot	1
9	00-944525-00001	Tubing (1/4 In.)	1
10	00-719377	Connector - Straight 3/8 x 3/8 (Brass)	AR
11	00-944525-00002	Tubing (3/8 In.)	AR
12	00-719376	Elbow 3/8 x 3/8	AR
13	00-944391	Valve - Gas (Double Regulated) (NAT)	AR
14	00-819298	Valve - Gas (Double Regulated) (LP)	AR
15	00-944525-00003	Tubing (1/4 In.)	AR
16	00-404193-00001	Valve - Pilot	AR
17	00-944520	Module - Ignition	AR
18	00-719383	Elbow 3/8 Orifice	AR
19	00-719951-00038	Hood - Orifice (Drill 38) (NAT)	AR
20	00-719951-00052	Hood - Orifice (Drill 52) (LP)	AR
21	00-976687-0N36A	Pilot (NAT)	AR
22	00-712363	Orifice - Pilot -LP (Liquid Propane) (LP)	AR
23	00-944541	Thermocouple (K-Type, Long) (Temperature - Used with 550 Deg. Thermostat)	AR
24	00-498432-0000A	Thermocouple (K-Type, Short) (Temperature - Used with 450 Deg. Thermostat)	AR
25	00-719737-00005	Burner Assy.	AR
26	00-944535	Mount - Burner	AR
27	00-719066	Bushing - Pipe 3/8 -1/8	AR
28	00-944553	Holder - Orifice	AR
29	00-944552	Shield	AR
30	00-944543	Bracket - Pilot	AR
31	00-944332	Shield - Thermocouple	AR
32	00-976534-00024	Harness - Wiring (VCCG24)	AR
33	00-976534-00036	Harness - Wiring (VCCG36)	AR
34	00-976534-00048	Harness - Wiring (VCCG48)	AR
35	00-976534-00060	Harness - Wiring (VCCG60)	AR
36	00-976534-00072	Harness - Wiring (VCCG72)	AR
37	00-498896	Insulation	AR

36 Cable, Ignition
37 Harness - Wiring (VCCG24)
38 Harness - Wiring (VCCG36)
39 Harness - Wiring (VCCG48)
40 Harness - Wiring (VCCG60)
41 Harness - Wiring (VCCG72)
42 Insulation

PARTS NOT ILLUSTRATED

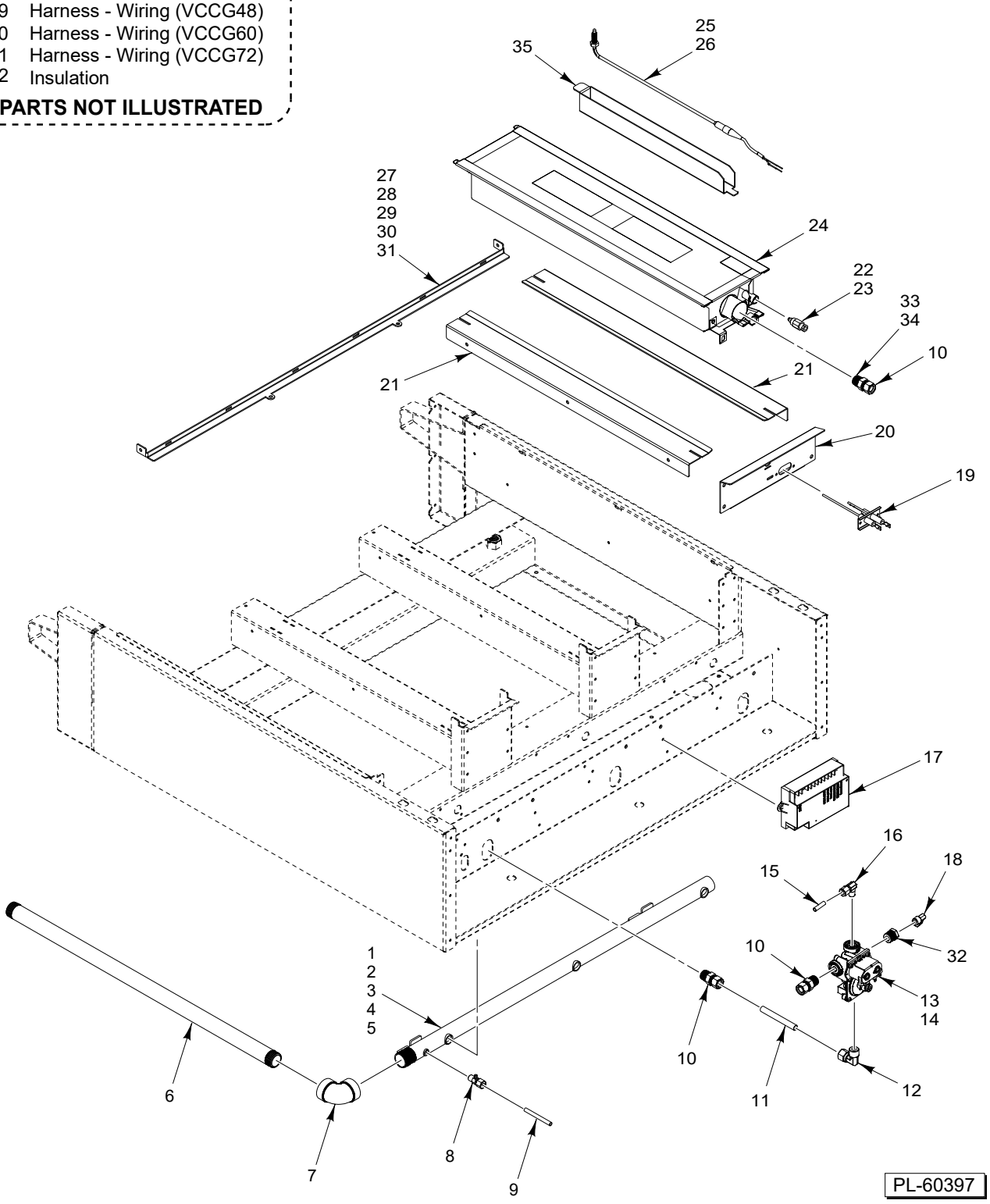

GAS COMPONENTS (INFRARED)

GAS COMPONENTS (INFRARED)

ILLUS.	PART NO.	NAME OF PART	AMT.
PL-23656			
1	00-944519-0024A	Manifold (24 In.)	1
2	00-944519-0036A	Manifold (36 In.)	1
3	00-944519-0048A	Manifold (48 In.)	1
4	00-944519-0060A	Manifold (60 In.)	1
5	00-944519-0072A	Manifold (72 In.)	1
6	00-944523	Pipe	1
7	FP-013-22	Elbow Pipe 3/4 x 90 Deg.	1
8	00-719179	Valve - Single Pilot	1
9	00-944525-00001	Tubing (1/4 In.)	1
10	00-719377	Connector - Straight 3/8 x 3/8 (Brass)	AR
11	00-944525-00002	Tubing (3/8 In.)	AR
12	00-719376	Elbow 3/8 x 3/8	AR
13	00-944391	Valve - Gas (Double Regulated) (NAT)	AR
14	00-819298	Valve - Gas (Double Regulated) (LP)	AR
15	00-944525-00003	Tubing (1/4 In.)	AR
16	00-404193-00001	Valve - Pilot	AR
17	00-944520	Module - Ignition	AR
18	00-719156	Elbow 3/8 x 7/16	AR
19	00-944517	Ignitor	AR
20	00-976532-00001	Shield - Burner	AR
21	00-944321	Support - Burner	AR
22	00-944548-00001	Orifice - Pilot (NAT)	AR
23	00-944548-00002	Orifice - Pilot (LP)	AR
24	00-976526-00001	Burner (Infrared)	AR
25	00-944541	Thermocouple (K-Type, Long) (Temperature - Used with 550 Deg. Thermostat)	AR
26	00-498432-0000A	Thermocouple (K-Type, Short) (Temperature - Used with 450 Deg. Thermostat)	AR
27	00-944331-00024	Baffle (24 In.)	1
28	00-944331-00036	Baffle (36 In.)	1
29	00-944331-00048	Baffle (48 In.)	1
30	00-944331-00060	Baffle (60 In.)	1
31	00-944331-00072	Baffle (72 In.)	1
32	00-719066	Bushing - Pipe 3/8 -1/8	AR
33	00-945079-00044	Orifice (NAT)	AR
34	00-945079-00053	Orifice (LP)	AR
35	00-944332	Shield - Thermocouple	AR
36	00-976537-00001	Cable, Ignition	1
37	00-976534-00024	Harness - Wiring (VCCG24)	AR
38	00-976534-00036	Harness - Wiring (VCCG36)	AR
39	00-976534-00048	Harness - Wiring (VCCG48)	AR
40	00-976534-00060	Harness - Wiring (VCCG60)	AR
41	00-976534-00072	Harness - Wiring (VCCG72)	AR
42	00-498896	Insulation	AR