GRIDDLES & BROILERS

VCRB SERIES
RESTAURANT SERIES GAS CHARBROILER



Model VCRB36

☐ **VCRB25** 25⅜" wide
☐ **VCRB36** 36" wide

STANDARD FEATURES

- Stainless steel front, sides and front top ledge.
- Full width front grease drawers.
- 13" cooking height on 4" adjustable legs.
- Heavy duty cast iron char-radiants.
- 5¼" wide cast iron grates are reversible for level or inclined broiling positions.
- One 14,500 BTU/hr. cast iron burner for each broiler grate.
- One infinite heat control valve for each burner.
- Standing pilot ignition system.
- Underburner deflector system reflects heat upwards creating a “Cool Zone” in the grease drawer and drip areas.
- ¾" rear gas connection and convertible gas pressure regulator for LP service.
- Constructed standard for natural gas service. LP conversion kit supplied with unit.
- One year limited parts and labor warranty.

SPECIFICATIONS

Low profile gas charbroiler, Vulcan Model No._____. Stainless steel front, sides and front top ledge. 13" cooking height on 4" legs. Full width front grease drawers. Heavy duty cast iron char-radiants. 5¼" wide cast iron grates are reversible for level or inclined broiling positions. One 14,500 BTU/hr. cast iron burner for each broiler grate. One infinite heat control valve for each burner. Standing pilot ignition system. Underburner deflector system reflects heat upwards. ¾" rear gas connection and convertible gas pressure regulator for LP service.

Exterior Dimensions:
_____"w x 27" d x 13" h on 4" legs.

CSA design certified. NSF listed.

NOTE: Models are constructed standard for natural gas service. Propane conversion kit is supplied with the unit. Conversion is the customer's responsibility. Please indicate propane or natural gas when processing your order.

NOTE: Elevation orifice kit is available free of charge for high-elevation applications. Installation is the customer's responsibility. Please indicate elevation when processing your order.

a division of ITW Food Equipment Group LLC
P.O. Box 696 ■ Louisville, KY 40201 ■ Toll-free: 1-800-814-2028 ■ Local: 502-778-2791 ■ Quote & Order Fax: 1-800-444-0602

VCRB SERIES
RESTAURANT SERIES GAS CHARBROILER

INSTALLATION INSTRUCTIONS:

1. A gas pressure regulator supplied with the unit must be installed:
   Natural Gas 4.0" (102 mm) W.C.
   Propane Gas 10.0" (254 mm) W.C.
2. All models require a 3" (76 mm) clearance at both sides and rear adjacent to non-combustible constructions. All models require a 4" (102mm) bottom clearance and must be installed with minimum 4" legs.

   An adequate ventilation system is required for Commercial Cooking Equipment (NFPA No. 96). Information may be obtained by writing to the National Fire Protection Association, Batterymarch Park, Quincy, MA 02169.
3. These units are manufactured for installation in accordance with National Fuel Gas Code, ANSI-Z223.1/NFPA #54 (latest edition). Copies may be obtained from The American Gas Association, Accredited Standards Committee Z223 @ 400 N. Capital St. NW, Washington, DC 20001, or the Secretary Standards Council, NFPA, 1 Batterymarch Park, Quincy, MA 02169-7471.

   NOTE: In The Commonwealth of Massachusetts
   All gas appliances vented through ventilation hood or exhaust system equipped with a damper or with a power means of exhaust shall comply with 248 CMR.
4. This appliance is manufactured for commercial installation only and is not intended for home use.

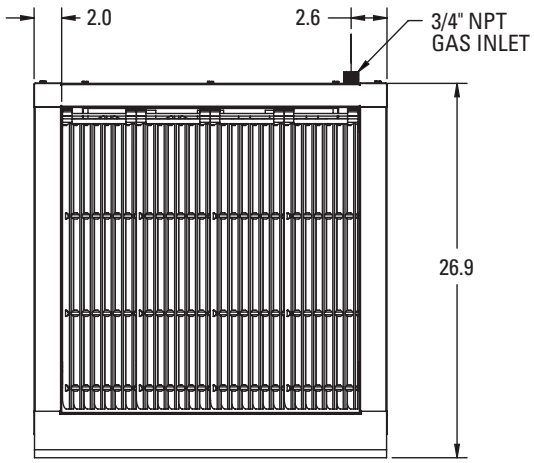

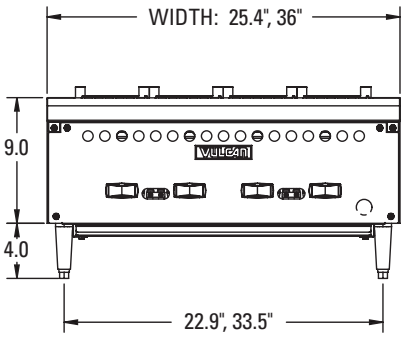

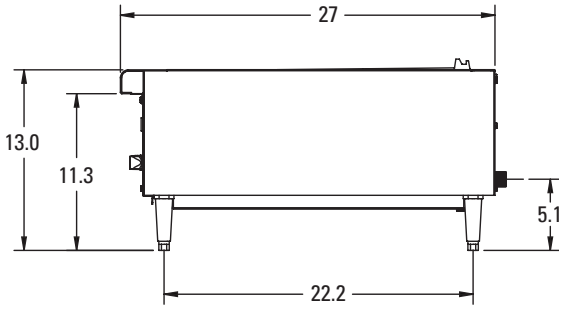

MODEL	WIDTH	DEPTH	OVERALL HEIGHT*	WORKING HEIGHT*	NO. OF BURNERS	TOTAL BTU/HR	NO. OF DRAWERS	APPROX. SHIP. WT.
VCRB25	25.4"	27"	13"	13"	4	58,000	1	290 lbs/131 kg
VCRB36	36"	27"	13"	13"	6	87,000	1	370 lbs/167 kg

*These are nominal dimensions and can vary by +1.75" with adjustable legs.

a division of ITW Food Equipment Group LLC
P.O. Box 696 ■ Louisville, KY 40201 ■ Toll-free: 1-800-814-2028 ■ Local: 502-778-2791 ■ Quote & Order Fax: 1-800-444-0602

NOTE: In line with its policy to continually improve its products, Vulcan reserves the right to change materials and specifications without notice.

Printed On Recycled Paper