CATALOG OF REPLACEMENT PARTS

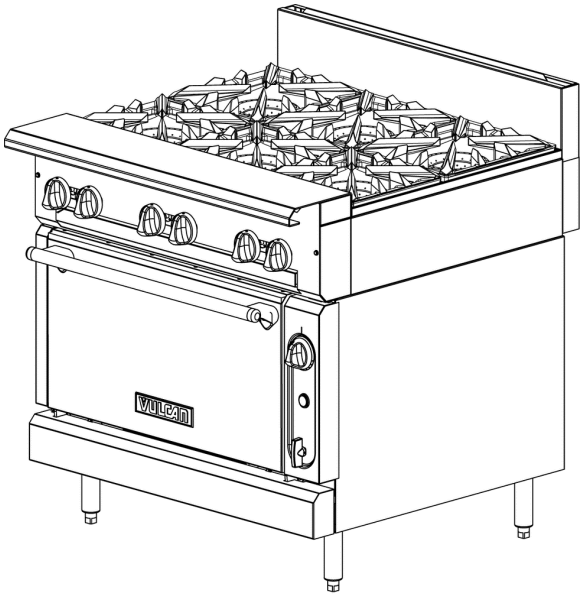

V6B36S Shown

V SERIES HDR GAS RANGES

TOPS

Open Top
Hot Top
Griddle Top
Work Surface

BASES

Standard Oven
Convection Oven
Cabinet Base

***Add "B" for Cabinet Base.**

***Add "S" for Standard Oven Base on 36" Models.**

***Add "C" for Convection Oven Base on 36" Models.**

VULCAN-HART DIVISION OF ITW FOOD EQUIPMENT GROUP, LLC 3600 NORTH POINT BLVD., BALTIMORE, MD 21222

FORM 37419 Rev. H (February 2024)

 © VULCAN-HART COMPANY 2024

Table of Contents

5 12/24/36 IN OPEN TOP BURNER
7 B MODEL 12/18/24/34 IN CABINET BASE
9 S MODEL OVEN
11 S MODEL GAS MANIFOLD ASSY
13 C MODEL OVEN
15 C MODEL GAS MANIFOLD ASSY
17 36 IN - 4 & 18 IN - 2 OPEN TOP BURNER
19 24/36 IN CHAR BROILER
21 18/36 IN FRENCH TOP RADIAL FIN HOT TOP
23 18/24/36 IN THERMO CONTROL GRIDDLE TOP
25 18/24/36 IN MANUAL CONTROL GRIDDLE TOP
27 12/18/24/36 IN WORK TOP
29 18/36 IN STEP UP OPEN TOP BURNER
31 36 IN 6 OPEN TOP STEP UP BURNER
33 STEP UP BURNER ASSEMBLY

45	00-497994-00001	Cap - End (RH)
46	00-499803-00001	Cap - End (LH)
47	00-957067-000G1	Riser - Stub 36”
48	00-957066-000G1	Riser - Stub 24”
49	00-957064-000G1	Riser - Stub 12”
50	00-404060-00001	Mixer - Air

PARTS NOT ILLUSTRATED

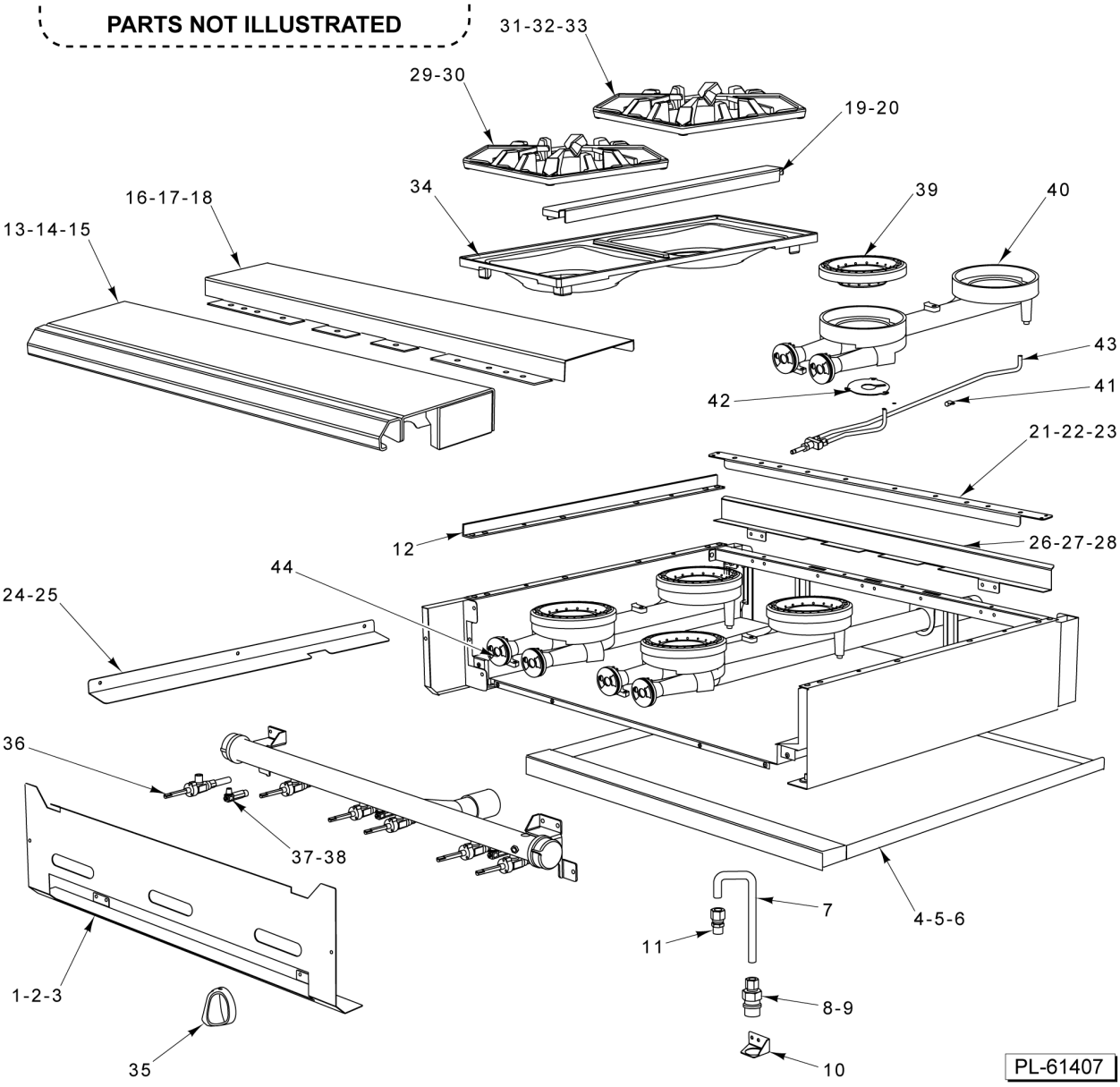

12/24/36 IN OPEN TOP BURNER

12/24/36 IN OPEN TOP BURNER

ILLUS. PL-61407	PART NO.	NAME OF PART	AMT.
1	00-957575-00002	Cover - Manifold 36" (6 Open Top Burner)	1
2	00-957570-00001	Cover Manifold 24" (4 Open Top Burner)	1
*3	00-957559-00001	Cover - Manifold 12" (2 Open Top Burner)	1
4	00-499006-000G2	Tray - Crumb (SST) 36" (6 Open Top Burner)	1
5	00-956724-000G2	Tray - Crumb (SST) 24" (4 Open Top Burner)	1
6	00-499969-000G2	Tray - Crumb (SST) 12" (2 Open Top Burner)	1
7	00-426509-00010	Tube - Flex 1/2" O.D. 10" Lg.	1
8	00-426509-00010	Tube - Flex 1/2" O.D. 10" Lg.	1
9	FP-012-02	Fitting - Tube 1/2 TBG X 3/8 MPT	1
10	00-499047-00001	Bracket - Disconnect	1
11	FP-012-02	Fitting - Tube 1/2 TBG X 3/8 MPT	1
12	00-497984-00001	Retainer - Grate	2
13	00-957236-000G1	Front Top Assy. 36" (6 Open Top Burner)	1
14	00-956705-000G1	Front Top Assy. 24" (4 Open Top Burner)	1
15	00-499966-000G1	Front Top Assy. 12" (2 Open Top Burner)	1
*16	00-957235-000G1	Front Top Assy - Condiment Rail 36" (6 Open Top Burner)	1
17	00-957239-000G1	Front Top Slide Rail Assy. 36" (6 Open Top Burner)	1
18	00-957357-000G1	Front Top Assy. - Condiment Rail 24" (4 Open Top Burner)	1
19	00-499493-00001	Support - Grate (Alum.)	1
20	00-499493-00002	Support - Grate (SST)	1
21	00-499001-00002	Support - HD Burner (SST) 36" (6 Open Top Burner)	1
22	00-956718-00002	Support - HD Burner (SST) 24" (4 Open Top Burner)	1
23	00-499965-00002	Support - HD Burner (SST) 12" (2 Open Top Burner)	1
24	00-499002-00003	Deflector - HD Splash L.H. (SST)	1
25	00-499002-00004	Deflector - HD Splash R.H. (SST)	1
26	00-499615-00002	Deflector - Rear (SST) 36" (6 Open Top Burner)	1
27	00-956725-00002	Deflector - Rear (SST) 24" (4 Open Top Burner)	1
28	00-499935-00001	Deflector - Rear (SST) 12" (2 Open Top Burner)	AR
29	00-959325-00001	Grate - Front 12 In (New Construction)	AR
30	00-959325-00001	Grate - Front 12 In (Previous Construction)	AR
31	00-959325-00002	Grate - Rear 12 In (New Construction)	AR
32	00-957369-00001	Grate - Rear 12" (Before S/N 481808643)	AR
33	00-959325-00002	Grate - Rear 12 In (Starting S/N 481808643)	1
34	00-957341-00001	Bowl - Rear 12" Double (Previous Construction)	AR
35	00-499712-00001	Knob - HD Burner	AR
**36	00-957367-00001	Valve - Burner Does not include orifice spud	AR
37	00-959108-000G1	Pilot - Kit Open Top Burners (Standard Burners)	AR
38	00-959108-000G2	Pilot Assy. - Step Up (Step Up Burners)	AR
39	00-957343-00002	Burner - Head 6"	AR
40	00-957342-00001	Venturi Assy	AR
41	00-402558-00004	Clip - Tubing	AR
42	00-958073-00002	Plate - Restrictor	AR
43	00-959108-000G1	Pilot - Kit Open Top Burners	AR
44	00-404060-00001	Mixer - Air	AR
45	00-497994-00001	Cap - End (RH)	1
46	00-499803-00002	Cap - End (LH)	1
47	00-957067-000G1	Riser - Stub 36" W/Alum. Back 36" (6 Open Top Burner)	1
48	00-957066-000G1	Riser - Stub 24" W/Alum. Back 24" (4 Open Top Burner)	1
49	00-957064-000G1	Riser - Stub 12" W/Alum. Back 12" (2 Open Top Burner)	1
50	00-404060-00001	Mixer - Air	1
51	00-010901-00042	Orifice - Spud (Nat. Gas) FOR SEA LEVEL TO 2499'	AR
52	00-010901-00052	Orifice - Spud (LP Gas) FOR SEA LEVEL TO 2499'	AR

* No Longer Available
** Must Order Orifice Spud Separately Item 51 for Natural and Item 52 for Propane .

8	00-959619-000G1	Hinge Assy. (Upper)
9	00-959619-000G2	Hinge Assy. (Lower)
10	00-497001-00001	Caster W/O Brake
11	00-497001-00002	Caster W/ Brake
12	00-958094-00001	Caster W/O Brake
13	00-958094-00002	Caster W/ Brake

PARTS NOT ILLUSTRATED

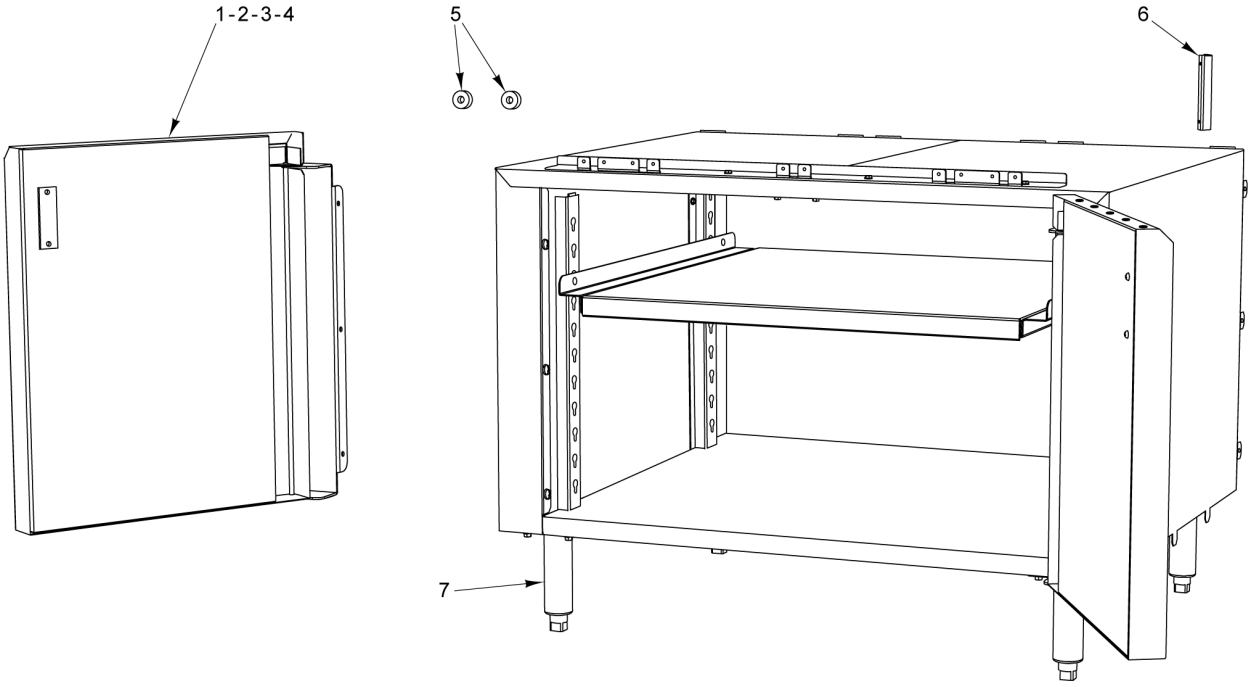

PL-61402

B MODEL 12/18/24/34 IN CABINET BASE

B MODEL 12/18/24/34 IN CABINET BASE

ILLUS. PL-61402	PART NO.	NAME OF PART	AMT.
1	00-959615-000G4	Door Assy. (LH) (12 In.)	1
2	00-959615-000G3	Door Assy. (RH) (12 In.)	1
3	00-959615-000G2	Door Assy. (LH) (18 In.)	1
4	00-959615-000G1	Door Assy. (RH) (18 In.)	1
5	00-497296-000G1	Magnet Assy	2
6	00-959632-00001	Handle - Door Handle - Door Keeler R3122	2
7	00-413112-00012	Leg - Plate Mount (6 In.)	4
8	00-959619-000G1	Hinge Assy. (Upper)	AR
9	00-959619-000G2	Hinge Assy. (Lower)	AR
10	00-497001-00001	Caster W/O Brake (5 In.)	4
11	00-497001-00002	Caster W/ Brake, Swivel (5 In.)	4
12	00-958094-00001	Caster W/O Brake (6 In.)	4
13	00-958094-00002	Caster W/ Brake (6 In.)	4

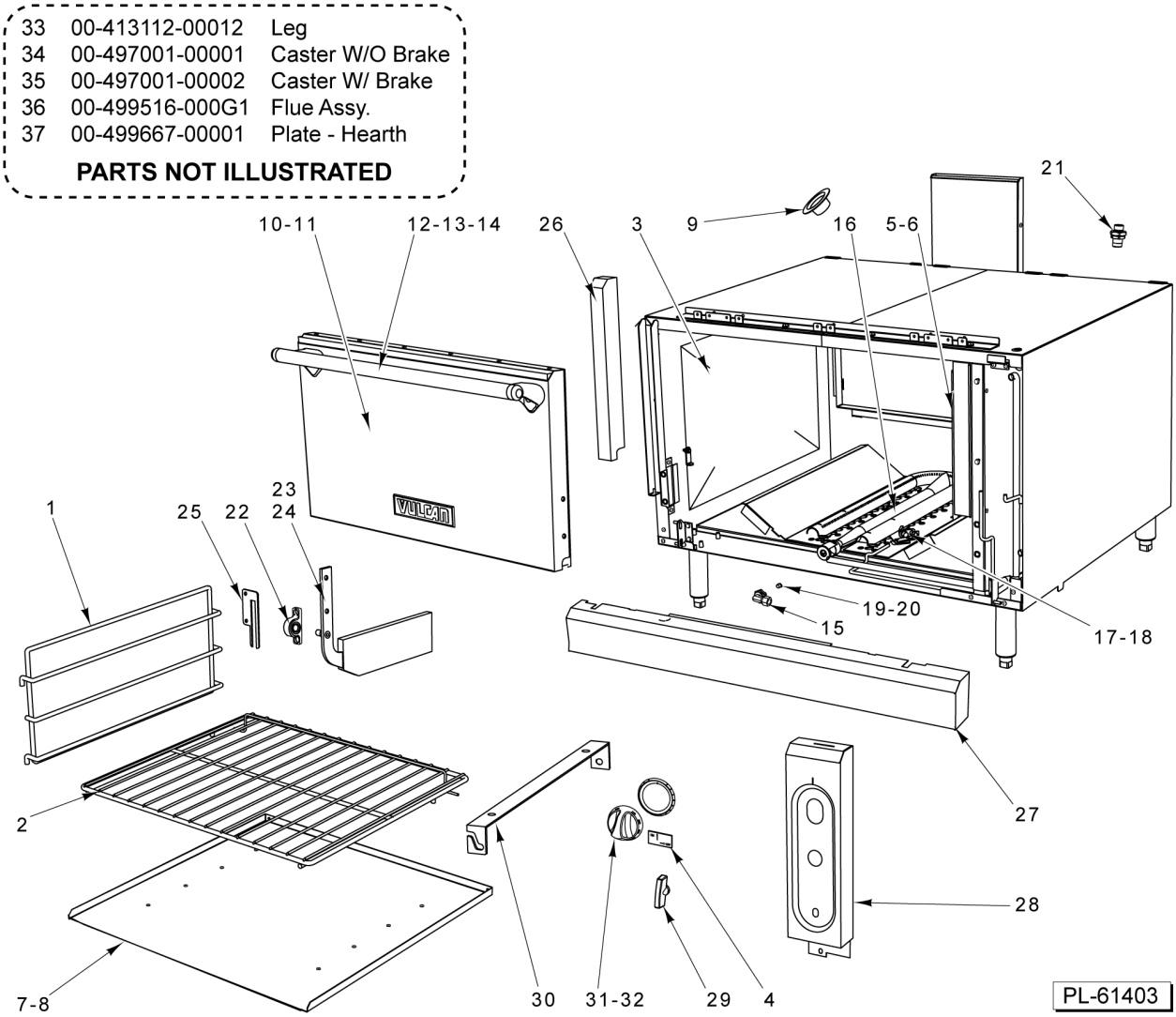
33 00-413112-00012 Leg
34 00-497001-00001 Caster W/O Brake
35 00-497001-00002 Caster W/ Brake
36 00-499516-000G1 Flue Assy.
37 00-499667-00001 Plate - Hearth
PARTS NOT ILLUSTRATED
10-11
12-13-14
26
3
9
16
5-6
21
1
25
22
23
24
19-20
15
17-18
2
27
28
7-8
30
31-32
29
4
PL-61403

S MODEL OVEN

S MODEL OVEN

ILLUS. PL-61403	PART NO.	NAME OF PART	AMT.
1	00-499468-00001	Support - Wire Rack	2
2	00-499517-00002	Rack, Oven	1
3	00-499467-00001	Oven - Side Liner R/H (Porcelain)	1
4	00-414708-00001	Plate - On-Off	1
5	00-499467-00002	Oven - Side Liner L/H (Porcelain)	1
6	00-499467-00004	Oven - Side Liner L/H (SST)	1
*7	00-499800-000G1	Bottom Liner (Porcelain)	1
8	00-499800-000G2	Bottom Liner (SST)	1
*9	00-405930-00001	Eyelet - Brass	1
10	00-499513-000G3	Door W/O Handle	1
11	00-499513-000G4	Door W/O Handle (SST)	1
12	00-956635-00001	Handle - Oven Door	1
13	SD-032-07	Self-Tapping Screw 10-24 x 1/2 Hex. Hex Washer Hd., Type TT	2
14	NS-047-70	Lock Nut 10-24 Hex	2
15	00-404079-0000F	Nozzle, 90 Deg. Burner	1
16	00-497891-00001	Burner - Oven	1
17	00-412787-00001	Pilot - Oven (NAT)	1
18	00-412787-0002	Pilot - Oven (LP)	1
19	00-010901-00031	Orifice - Spud (31 Drill) (Sea Level - 2499 Ft.)(NAT)	1
20	00-010901-00047	Orifice - Spud (47 Drill) (Sea Level - 2499 Ft.) (LP)	1
21	00-499554-00001	Disconnect - Main Male Q	1
22	00-497906-00001	Bearing - Pillow Block	2
23	00-499512-000G3	Counterweight - Oven L.H.	1
24	00-499512-000G4	Counterweight - Oven R.H.	1
25	00-499452-00001	Coverplate	1
26	00-958353-00001	Cover - Moulian Panel	1
27	00-958470-000G1	Kick Panel	1
28	00-499507-00001	Panel - Oven Control	1
29	00-413157-00001	Knob - Shut Off	1
30	00-497883-00001	Bracket - Themostat Bulb	1
31	00-961928-00550	Knob - Oven 550 Deg. F	1
32	00-961928-00650	Knob - Oven 650 Deg. F	1
33	00-413112-00012	Leg - Plate Mount (6 In.)	4
34	00-497001-00001	Caster W/O Brake (5 In.)	AR
35	00-497001-00002	Caster W/ Brake, Swivel (5 In.)	AR
36	00-499516-000G1	Flue Assy	1
37	00-499667-00001	Plate - Hearth	1

* No Longer Available

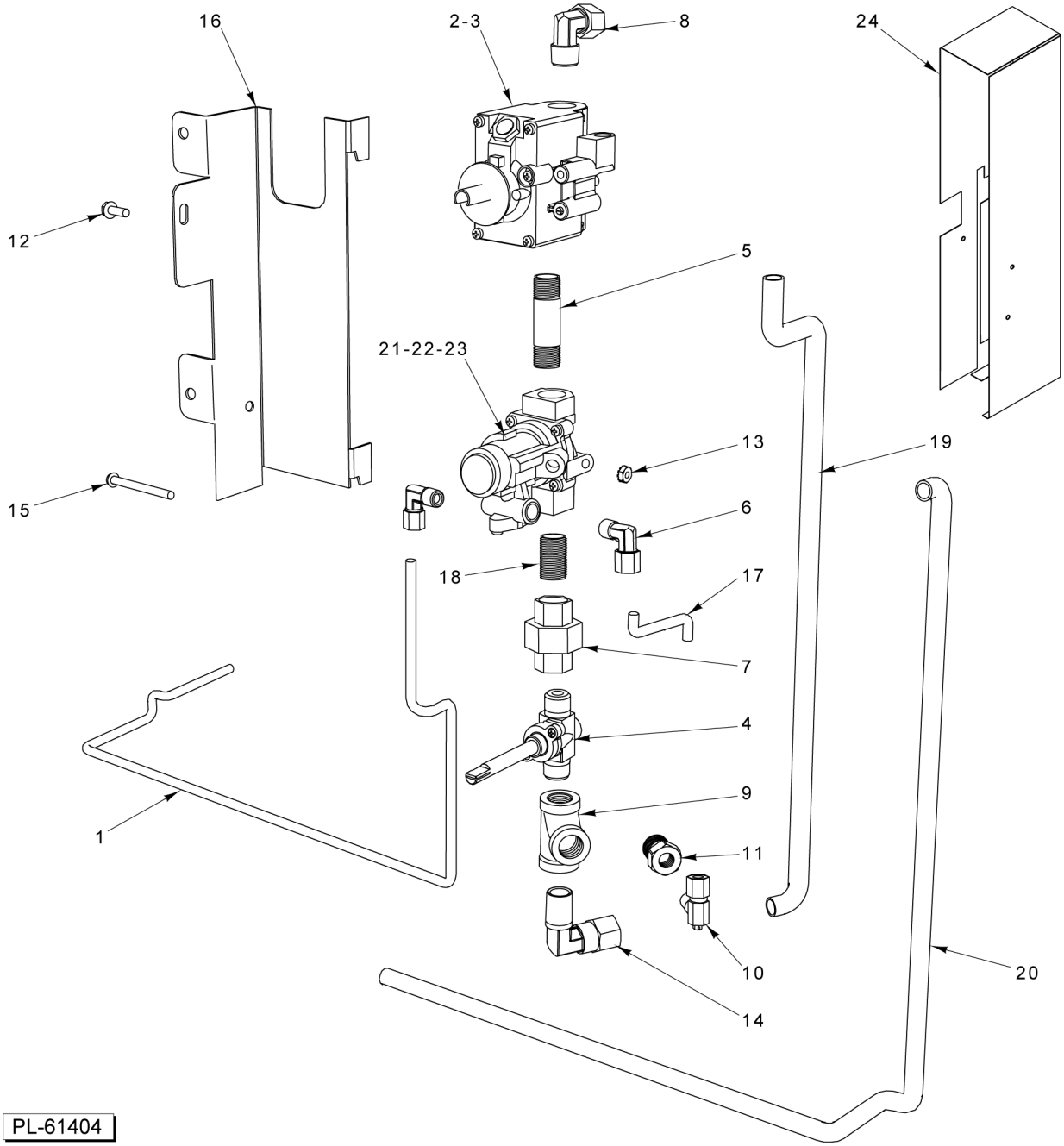

S MODEL GAS MANIFOLD ASSY

S MODEL GAS MANIFOLD ASSY

ILLUS. PL-61404	PART NO.	NAME OF PART	AMT.
1	00-426505-00036	Tube - Flex 1/4" O.D. 36" Lg.	1
2	00-407522-00007	Thermostat - 550 Deg. F.	1
3	00-958754-000G1	Kit - Thermostat 400-650 Deg. F.	1
4	00-719971	Valve - Gas Manual Shut-Off.	1
5	FP-035-54	Pipe - 3/8 X 2.250 (BLKSTL) (TBE).	1
6	FP-012-21	Elbow 90 Deg. (1/8 Male Pipe x 1/4 Tube).	2
7	00-719032	Union.	1
8	FP-085-68	Fitting- Elbow (7/16 TBG X 3/8 MPT).	1
9	FP-019-10	Tee - 3/8 X 3/8 X 3/8 (BLKSTL).	1
10	00-404193-00001	Valve - Pilot 260 BROILER.	1
11	00-719066	Bushing - Pipe 3/8 -1/8.	1
12	SD-032-07	Self-Tapping Screw 10-24 x 1/2 Hex. Hex Washer Hd., Type TT.	1
13	NS-044-09	Nut Assy. 10-24 Hex KEPS.	1
14	FP-012-03	Fitting - Elbow 1/2 TBG X 3/8 MPT.	1
15	SC-060-38	Mach. Screw 10-24 X 2 Slotted Rd. Hd.	1
16	00-499465-00001	Bracket - Gas Mounting.	1
17	00-426505-00009	Tube - Flex 1/4" O.D. 9" Lg.	1
18	FP-035-46	Pipe 3/8 x 1 Lg. TBE.	1
19	00-426509-00024	Tube - Flex 1/2" O.D. 24" Lg.	1
20	00-426508-00048	Tube - Flex 7/16" O.D. 48" Lg.	1
21	00-962067-0KIT1	Kit - Safety Valve Service (see SB1039) (Before 4/1/19).	1
22	00-962067-00001	Valve - Safety (Starting 4/1/19).	1
23	00-412788-00048	Thermocouple 48".	1
24	00-962017-00001	Heat Shield Assy.	1

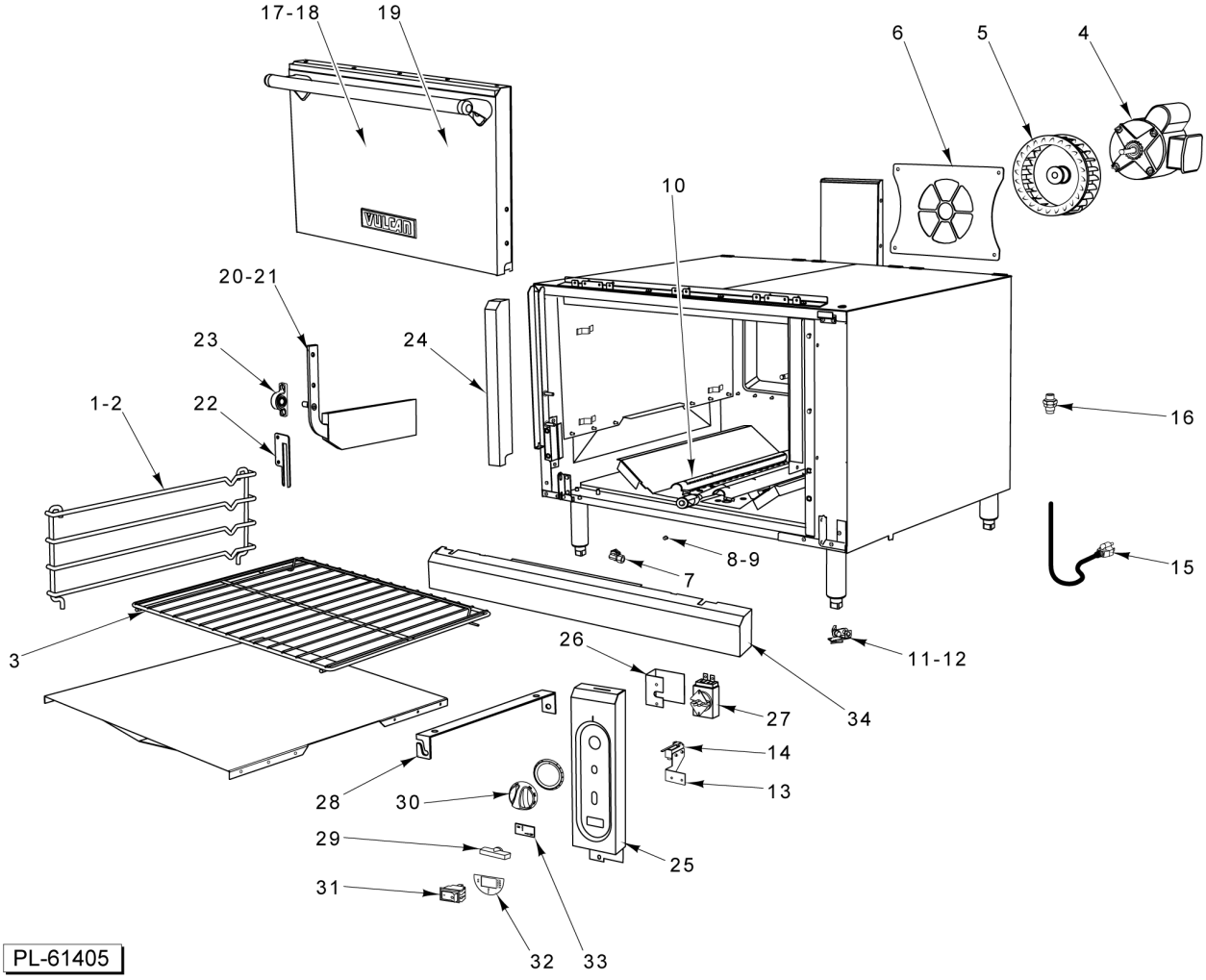
17-18
19
6
5
4
10
20-21
23
24
1-2
22
16
8-9
7
15
3
26
11-12
34
27
14
13
28
30
29
25
31
32
33
PL-61405

C MODEL OVEN

C MODEL OVEN

ILLUS. PL-61405	PART NO.	NAME OF PART	AMT.
1	00-499468-00002	Support - Wire Rack R.H.	1
2	00-499468-00003	Support - Wire Rack L.H.	1
3	00-499517-00002	Rack, Oven	2
4	00-419730-00001	Motor (1/6 Hp., 115/208-230 V., 50/60 Hz., 1 Ph.)	1
5	00-415780-00008	Wheel - Blower (Incls. Set Screws)	1
6	00-499641-00001	Grate - Motor Convection Oven	1
7	00-404079-0000F	Nozzle, 90 Deg. Burner	1
8	00-010901-00042	Orifice - Spud (Drill 42) (Nat.) (Sea Level - 2499 FT.)	1
9	00-010901-00051	Orifice - Spud (Drill 51) (Pro) (Sea Level - 2499 Ft.)	1
10	00-497891-00001	Burner - Oven	1
11	00-412787-00001	Pilot - Oven (NAT)	1
	00-426262-00004	Pilot Oven (NAT) Starting March 2019	AR
12	00-412787-00002	Pilot - Oven (LP)	1
	00-426262-00005	Pilot Oven (PRO) Starting March 2019	AR
13	00-956633-00002	Bracket - Switch Door	1
14	00-411496-000F1	Switch - Micro Door	1
15	00-405016-00001	Cord - Electric Supply (120 V. Only)	1
16	00-499554-00001	Disconnect - Main Male Q	1
17	00-499513-000G3	Door W/O Handle	1
18	00-499513-000G4	Door W/O Handle (SST)	1
19	00-956635-00001	Handle - Oven Door	1
20	00-499512-000G6	Counterweight - Oven Convection R.H.	1
21	00-499512-000G3	Counterweight - Oven L.H.	1
22	00-499452-00001	Coverplate	1
*23	00-497906-00001	Bearing - Pillow Block	1
24	00-958353-00001	Cover - Moulian Panel	1
25	00-499507-00003	Cover - Control Panel	1
26	00-957464-00001	Guard - Thermostat	1
27	00-411506-00015	Thermostat (200-550 Deg. F)	1
28	00-497883-00002	Bracket - Thmostat Bulb	1
29	00-413157-00001	Knob - Shut Off	1
30	00-922511	Knob - Thermostat	1
31	00-715112	Switch - Rocker, Lighted	1
32	00-957609-00001	Label - On - Off Cool Down	1
33	00-414708-00001	Plate - On-Off	1
34	00-499515-000G1	Kick Plate Assy	1

* Order with SC-037-87, Qty. 2

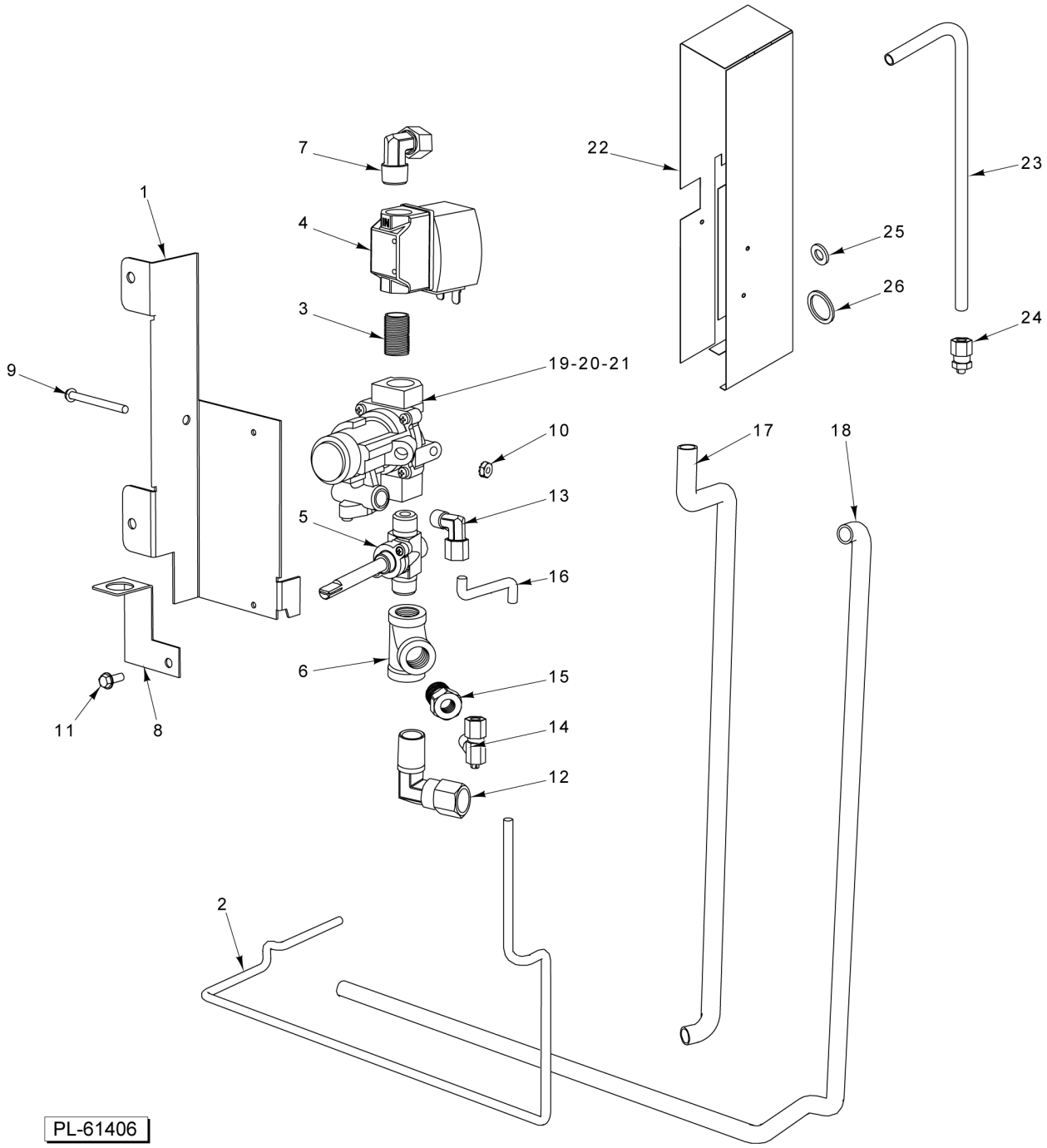

C MODEL GAS MANIFOLD ASSY

C MODEL GAS MANIFOLD ASSY

ILLUS. PL-61406	PART NO.	NAME OF PART	AMT.
1	00-499651-00003	Bracket - Mounting Gas (Convection)	1
2	00-426505-00036	Tube - Flex 1/4" O.D. 36" Lg.	1
3	FP-035-47	PIPE - 3/8 X 1.125 (TBE) (BLKSTL)	1
4	00-428045-00001	Gas Solenoid Valve	1
5	00-719971	Valve - Gas Manual Shut-Off	1
6	FP-019-10	Tee - 3/8 X 3/8 X 3/8 (BLKSTL)	1
7	FP-085-68	Fitting- Elbow (7/16 TBG X 3/8 MPT)	1
8	00-956615-00002	Bracket - Manifold Support	1
9	SC-060-38	Mach. Screw 10-24 X 2 Slotted Rd. Hd.	1
10	NS-044-09	Nut Assy. 10-24 Hex KEPS	1
11	SD-032-07	Self-Tapping Screw 10-24 x 1/2 Hex. Hex Washer Hd., Type TT	1
12	FP-012-03	Fitting - Elbow 1/2 TBG X 3/8 MPT	1
13	FP-012-21	Elbow 90 Deg. (1/8 Male Pipe x 1/4 Tube)	1
14	00-404193-00001	Valve - Pilot	1
15	FP-026-04	Bushing - Pipe 3/8 to 1/8	1
16	00-426505-00006	Tube - Flex (1/4 x 6 In.)	1
17	00-426509-00024	Tube - Flex 1/2" O.D. 24" Lg.	1
18	00-426508-00048	Tube - Flex 7/16" O.D. 48" Lg.	1
19	00-962067-0KIT1	Kit - Safety Valve Service (see SB1039) (Before 4/1/19)	1
20	00-962067-00001	Valve - Safety (Starting 4/1/19)	1
21	00-412788-00048	Thermocouple (48 In.)	1
22	00-962017-00001	Heat Shield Assy	1
23	00-426508-00012	Tube - Flex 7/16" OD x 12" Lg.	1
24	FP-085-42	Fitting - Tube (7/16 TBG X 3/8 MPT)	1
25	00-962107-00002	Grommet	1
26	00-962107-00001	Grommet	1

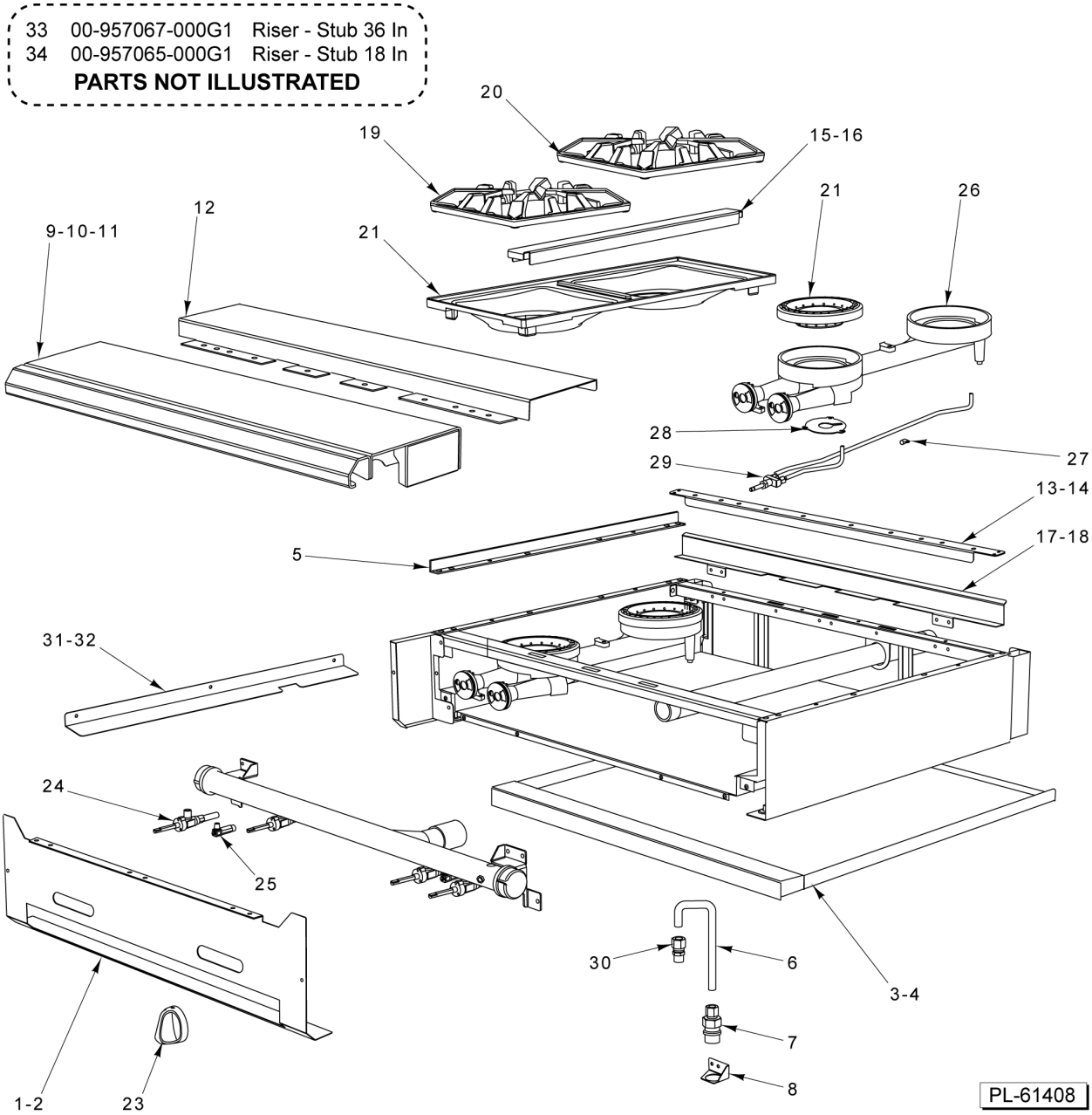

36 IN - 4 & 18 IN - 2 OPEN TOP BURNER

36 IN - 4 & 18 IN - 2 OPEN TOP BURNER

ILLUS. PL-61408	PART NO.	NAME OF PART	AMT.
1	00-957573-00001	Manifold Cover 36" (4 Open Top Burner)	1
2	00-957564-00001	Manifold Cover 18" (2 Open Top Burner)	1
3	00-499006-000G2	Tray - Crumb (SST) 36" (4 Open Top Burner)	1
4	00-956696-000G2	Tray - Crumb (SST) 18" (2 Open Top Burner)	AR
5	00-497984-00001	Retainer - Grate	2
6	00-426509-00010	Tube - Flex 1/2" O.D. 10" Lg.	1
7	00-499555-00001	Disconnect - Gas Female	1
8	00-499047-00001	Bracket - Disconnect	1
9	00-499425-000G1	Front Top Assy. 36" (4 Open Top Burner)	1
10	00-957235-000G1	Front Top Assy - Condiment Rail 36" (4 Open Top Burner)	4
11	00-956658-000G1	Front Top Assy 18" (2 Open Top Burner)	AR
12	00-957239-000G1	Front Top Slide Rail Assy	4
13	00-499001-00004	Support - (4) OTB Burner (SST)	1
14	00-956690-00001	Support - (2) OTB Burner (SST)	1
15	00-499493-00001	Support - Grate (Alum.)	1
16	00-499493-00002	Support - Grate (SST)	1
17	00-499615-00002	Deflector - Rear (SST) 36" (4 Open Top Burner)	1
18	00-956697-00002	Deflector - Rear (SST) 36" (4 Open Top Burner)	1
19	00-959326-00001	Grate Front 18 in	AR
20	00-959326-00002	Grate Rear 18 in	AR
*21	NLA Bowl	Bowl - 18" Double Order Grate Front (#19) and Rear (#20)	AR
22	00-957343-00002	Burner - Head 6"	AR
23	00-499712-00001	Knob - HD Burner	AR
**24	00-957367-00001	Valve - Burner	AR
25	00-499970-00001	Valve - Pilot Quick Disconnect	AR
26	00-957398-000G1	Venturi Assy	1
27	00-402558-00004	Clip - Tubing	AR
28	00-958073-00001	Plate - Restricor	1
29	00-959108-000G1	Pilot - Kit Open Top Burners	1
30	FP-012-02	Fitting - Tube 1/2 TBG X 3/8 MPT	1
31	00-499002-00003	Deflector - HD Splash L.H. (SST)	1
32	00-499002-00004	Deflector - HD Splash R.H. (SST)	1
33	00-957067-000G1	Riser - Stub 36" W/Alum. Back 36" (4 Open Top Burner)	1
34	00-957065-000G1	Riser - Stub 18" W/Alum. Back 36" (4 Open Top Burner)	1
35	00-010901-00042	Orifice - Spud (Nat. Gas) FOR SEA LEVEL TO 2499'	1
36	00-010901-00052	Orifice - Spud (LP Gas) FOR SEA LEVEL TO 2499'	1

* Bowl - 18" Double is now designed into Front and Rear Grate.
** Must Order Orifice Spud Separately Item 35 for Natural and Item 36 for

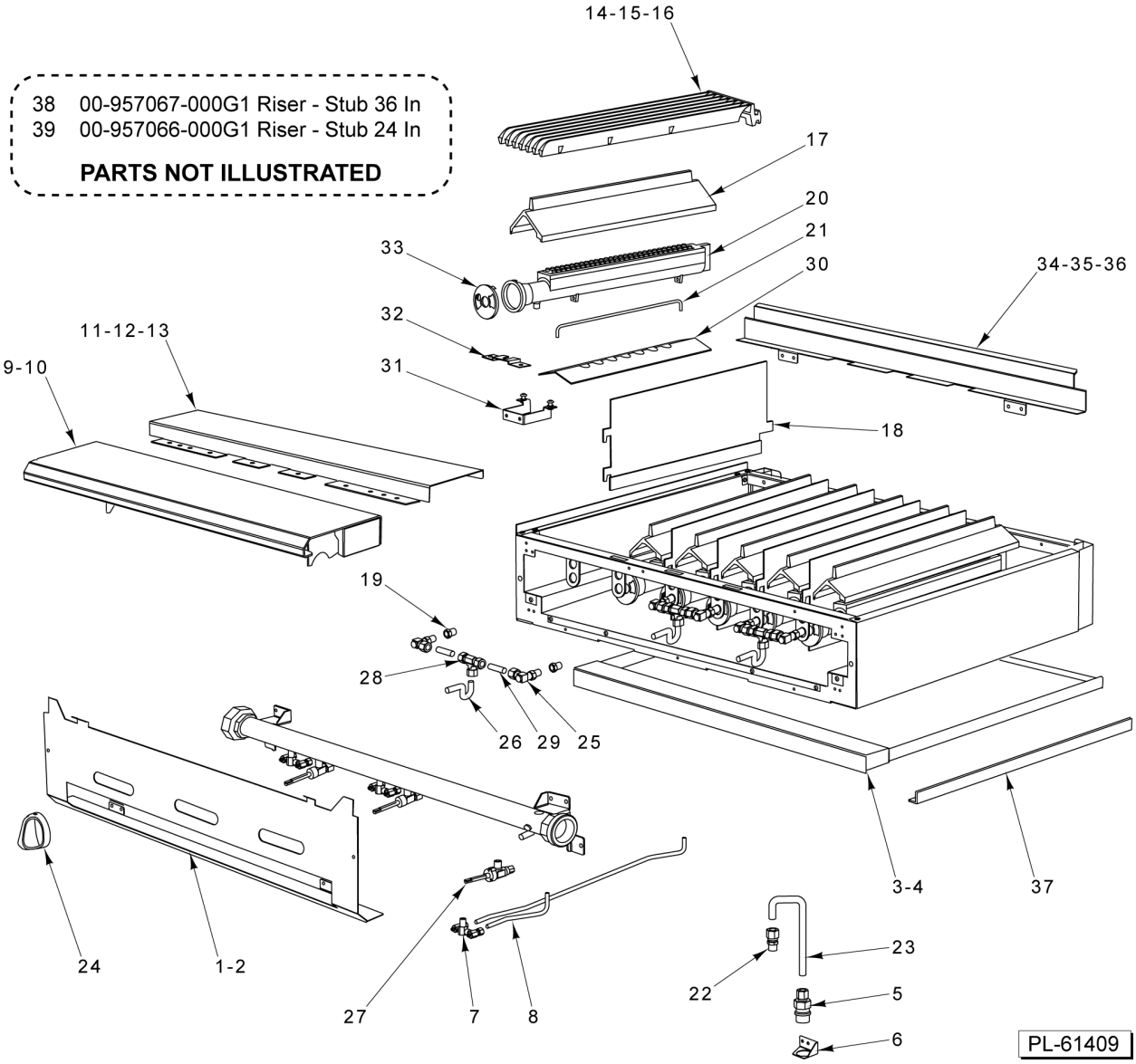

24/36 IN CHAR BROILER

24/36 IN CHAR BROILER

ILLUS. PL-61409	PART NO.	NAME OF PART	AMT.
1	00-957574-00001	Cover - Manifold 36" Char Broiler	1
2	00-957567-00001	Cover - Manifold 24" Char Broiler	1
3	00-499006-000G2	Tray - Crumb (SST) 36" Char Broiler	1
4	00-956724-000G2	Tray - Crumb (SST) 24" Char Broiler	1
5	00-499555-00001	Disconnect - Gas Female	1
6	00-499047-00001	Bracket - Disconnect	1
7	00-957814-00001	Valve - Dual Pilot	1
8	00-788541-0000A	Tube - Pilot, Flex (W/Tip)	1
9	00-499425-000G1	Front Top Assy. 36" Char Broiler	1
10	00-956705-000G1	Front Top Assy. 24" Char Broiler	1
11	00-957235-000G1	Front Top Assy - Condiment Rail 36" Char Broiler	1
12	00-957239-000G1	Front Top Slide Rail Assy. 36" Char Broiler	1
13	00-957357-000G1	Front Top Assy. - Condiment Rail 24" Char Broiler	1
14	00-412852-00001	Grate - Top Straight	6
15	00-722131	Grate - Slanted 6-RIB 24" Char Broiler	2
16	00-710424	Grate - Slanted 7-RIB 24" Char Broiler	2
17	00-710407	Radient	6
18	00-956614-00002	Supercharger	5
19	00-418051-0000F	Hood - Orifice	6
20	00-957413-00001	Burner Assy	6
21	00-710455	Burner Rod	6
22	FP-012-02	Fitting - Tube 1/2 TBG X 3/8 MPT	1
23	00-426509-00010	Tube - Flex 1/2" O.D. 10" Lg	1
24	00-499712-00001	Knob - HD Burner	3
25	00-719383	W/O Plug	6
26	00-722425	Tubing - Flex 3/8" X 8" Lg	3
27	00-957348-00001	Valve - Gas	3
28	00-714676	TEE, 3/8" UNION, TUBE TO TUBE	1
29	00-722468	NLA - Obsolete--3/8"" Tube 1-1/4"" Long	1
30	00-956748-00001	Heat Deflector	6
31	00-957412-00001	Bracket - Dual Pilot	AR
32	00-957335-00001	Stabilizer - Burner	6
33	00-719329	Air Mixer Assy	6
34	00-499615-00002	Deflector - Rear (SST) 36" Char Broiler	1
35	00-956725-00002	Deflector - Rear (SST) 24" Char Broiler	1
36	00-958442-00002	Deflector - Rear (SST) 48" Char Broiler	AR
37	00-499959-000G2	Retainer - Grate	2
38	00-957067-000G1	Riser - Stub 36" W/Alum. Back 36" Char Broiler	1
39	00-957066-000G1	Riser - Stub 24" W/Alum. Back 24" Char Broiler	1

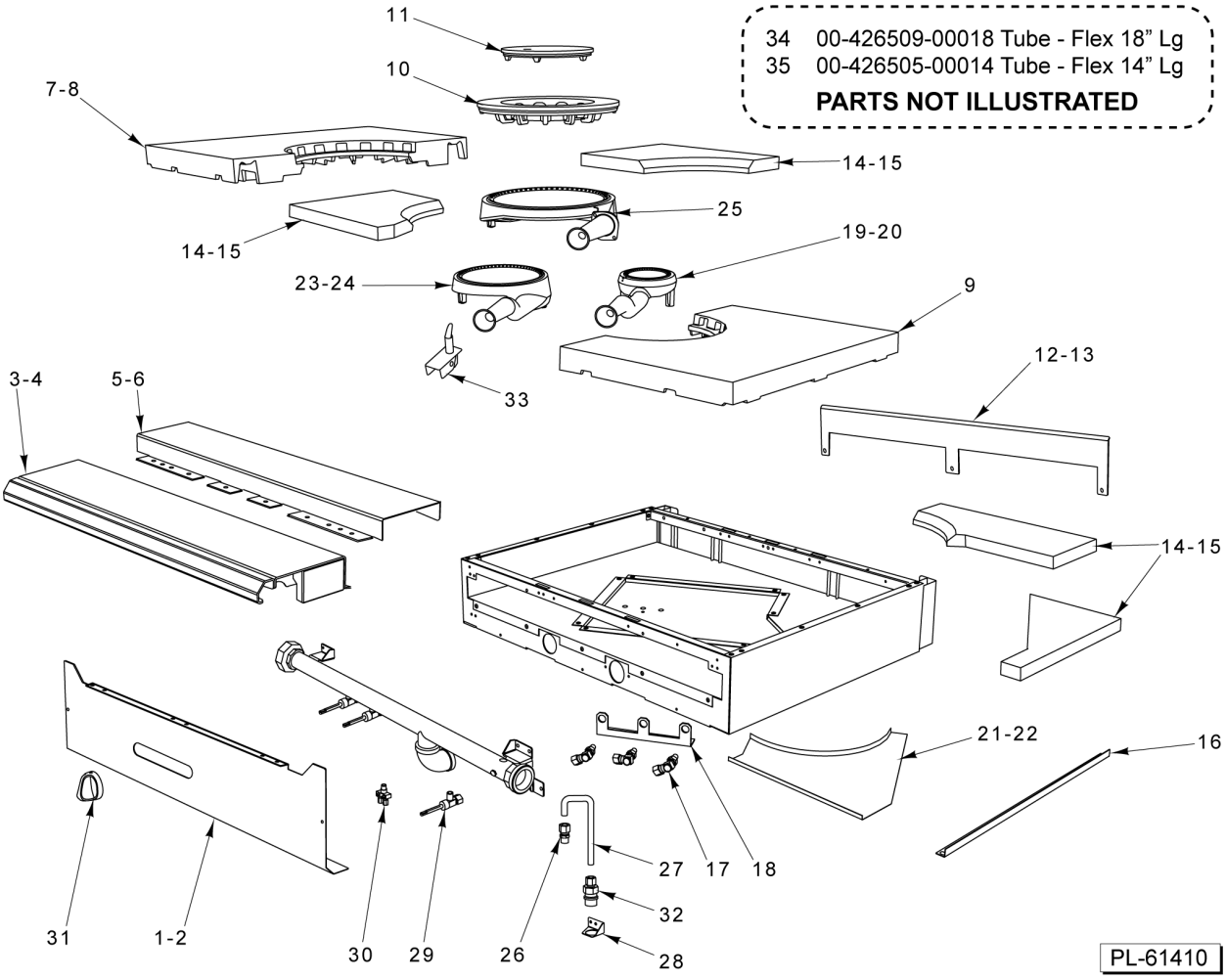

18/36 IN FRENCH TOP RADIAL FIN HOT TOP

18/36 IN FRENCH TOP RADIAL FIN HOT TOP

ILLUS. PL-61410	PART NO.	NAME OF PART	AMT.
1	00-957576-00001	Cover - Manifold W/Rail 36" Radial Fin. Hot Top	1
2	00-957563-00001	Cover Manifold 18" Radial Fin. Hot Top	1
3	00-499425-000G1	Front Top Assy. 36" Radial Fin. Hot Top	1
4	00-956658-000G1	Front Top Assy 18" Radial Fin. Hot Top	1
5	00-957235-000G1	Front Top Assy - Condiment Rail	1
6	00-957239-000G1	Front Top Slide Rail Assy	1
7	00-499814-00001	Casting - LH Radial Fin. 36" 36" Radial Fin. Hot Top	1
8	00-956800-00001	Casting - Radial Fin. 18" Radial Fin. Hot Top	1
9	00-499814-00002	Casting - RH Radial Fin. 36"	1
10	00-400705-00001	Ring (Top)	1
11	00-715211-000GR	Plate - Top	1
12	00-956809-00002	Deflector - Radial Fin. Rear 36" Radial Fin. Hot Top	1
13	00-956663-00001	Deflector - Radial Fin. 18" Radial Fin. Hot Top	1
14	00-956622-000G1	Brick Set 36" Radial Fin. Hot Top	1
15	00-956799-000G1	Brick Set 18" Radial Fin. Hot Top	1
16	00-497984-00001	Retainer - Grate	1
17	00-719383	Elbow 3/8 Orifice W/O Plug	1
	00-404079-0000F	Elbow 7/16 Orifice W/O Plug - 5/8 nut	1
18	00-499810-00002	Bracket - Pilot	1
19	00-957801-000G1	Burner - Inner, Radial Fin 36" Radial Fin. Hot Top	1
20	00-956794-00001	Burner - 18" Inner 18" Radial Fin. Hot Top	1
21	00-957946-000G1	Plate - Aeration Assy. 36" Radial Fin. Hot Top	1
22	00-957710-000G1	Plate - Aeration, Assy. 18" Radial Fin. Hot Top	1
23	00-409413-000G1	Burner 36" Radial Fin. Hot Top	1
24	00-956793-00001	Burner - 18" Outer 18" Radial Fin. Hot Top	1
25	00-409412-000G1	Burner - Top Outer	1
26	FP-012-02	Fitting - Tube 1/2 TBG X 3/8 MPT	1
27	00-426509-00010	Tube - Flex 1/2" O.D. 10" Lg	1
28	00-499047-00001	Bracket - Disconnect	1
29	00-408379-00004	Valve - Burner (Top)	3
30	00-957814-00001	Valve - Dual Pilot	1
31	00-499712-00001	Knob - HD Burner	3
32	00-499555-00001	Disconnect - Gas Female	1
33	00-409839-00003	Burner - Pilot	3
34	00-426509-00018	Tube - Flex 1/2" O.D. 18" Lg	3
35	00-426505-00014	Tube - Flex 1/4" O.D. 14" Lg	2

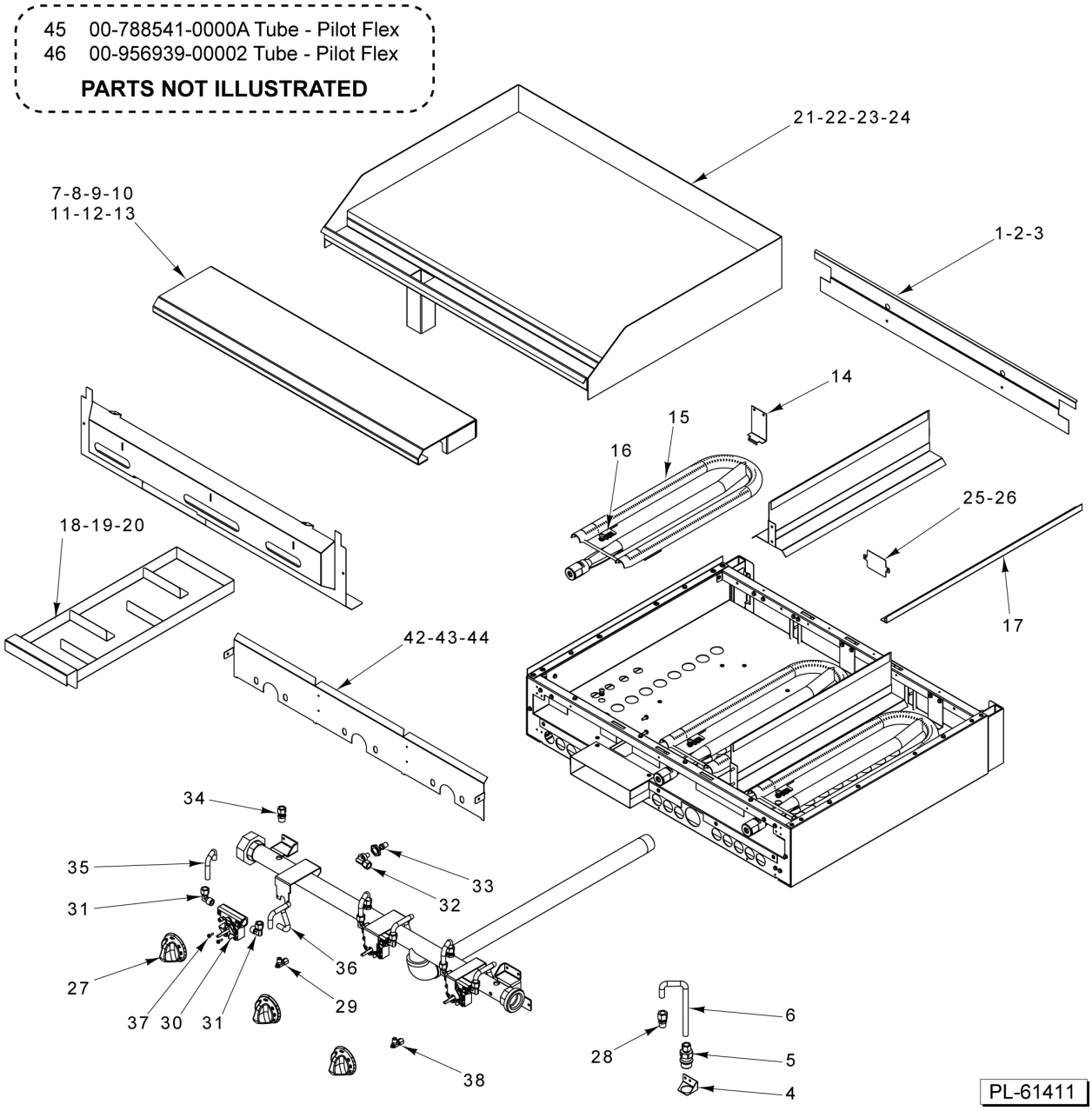

18/24/36 IN THERMO CONTROL GRIDDLE TOP

18/24/36 IN THERMO CONTROL GRIDDLE TOP

ILLUS. PL-61411	PART NO.	NAME OF PART	AMT.
1	00-957961-00001	Panel - Rear Closure 36" (Alum.) (36" Griddle Top)	1
2	00-957989-00001	Panel - Rear Closure 24" (24" Griddle Top)	1
3	00-957993-00001	Panel - Rear Closure 18" (18" Griddle Top)	AR
4	00-499047-00001	Bracket - Disconnect	1
5	00-499555-00001	Disconnect - Gas Female	1
6	00-426509-00010	Tube - Flex 1/2" O.D. 10" Lg	1
7	00-499425-000G1	Front Top Assy. (36" Griddle Top)	1
8	00-956705-000G1	Front Top Assy. (24" Griddle Top)	1
9	00-956658-000G1	Front Top Assy (18" Griddle Top)	1
10	00-957235-000G1	Front Top Assy - Condiment Rail (36" Griddle Top)	1
11	00-957239-000G1	Front Top Slide Rail Assy. (36" Griddle Top)	1
12	00-957357-000G1	Front Top Assy. - Condiment Rail (24" Griddle Top)	1
13	00-957235-000G1	Front Top Assy - Condiment Rail (18" Griddle Top)	1
14	00-499112-00001	Bracket - Griddle Burner Support	3
15	00-499635-00001	Griddle Burner Assy	3
16	00-413302-00001	Clip - Pilot Mounting	3
17	00-497984-00001	Retainer - Grate	2
18	00-957982-000G4	Grease Drawer Assy. (36" Griddle Top)	1
19	00-956709-000G4	Grease Drawer Assy. (24" Griddle Top)	1
20	00-956677-000G4	Grease Drawer Assy. (18" Griddle Top)	1
21	00-499622-000G2	36 In Griddle Assy	1
22	00-499957-000G2	24 In Griddle Assy	1
23	00-956674-000G2	18 In Griddle Assy	1
24	00-957170-000G1	Griddle Baffle Assy. Center	2
25	00-956662-00001	Cover - Rear Manifold	1
26	00-956710-00001	Cover - Hot Top 24" Griddle	1
27	00-499488-00002	Knob - Gas Thermostat	3
28	FP-012-02	Fitting - Tube 1/2 TBG X 3/8 MPT	1
29	00-404193-00001	Valve - Pilot	3
30	00-499488-00001	Thermostat - Gas	3
31	FP-085-68	Fitting- Elbow (7/16 TBG X 3/8 MPT)	6
32	00-404079-0000F	Nozzle	3
33	00-418051-0000F	Hood - Orifice	3
34	FP-085-42	Fitting - Tube (7/16 TBG X 3/8 MPT)	3
35	00-426508-00006	Tube - Flex 7/16" O.D. 6" Lg	3
36	00-426508-00010	Tube - Flex 7/16" O.D. 10" Lg	3
37	SD-036-79	Self-Tapping Screw 6-32 x 1/2 Type TT Hex Hd. (SST)	6
38	FP-085-53	Pipe Plug 1/8	1
39	00-957604-000G2	Cover - Manifold 36" Thermo Griddle (Condiment Rail)	1
40	00-957602-000G2	Cover - Manifold 24" Therno Griddle (Condiment Rail)	1
41	00-957594-000G1	Cover - Manifold 18" Thermo Griddle	1
42	00-957396-00002	Baffle - Griddle	1
43	00-957988-00002	Baffle - 24" Forward Griddle	1
44	00-957992-00002	Bafffle - 18" Forward Griddle	1
45	00-788541-0000A	Tube - Pilot, Flex (W/Tip)	2
46	00-956939-00002	Tube - Pilot, Flex (W/Tip)	1

36	00-957170-000G1	Griddle Baffle Assy.
37	00-788541-0000A	Tube - Pilot Flex
38	00-956939-00002	Tube - Pilot Flex

PARTS NOT ILLUSTRATED

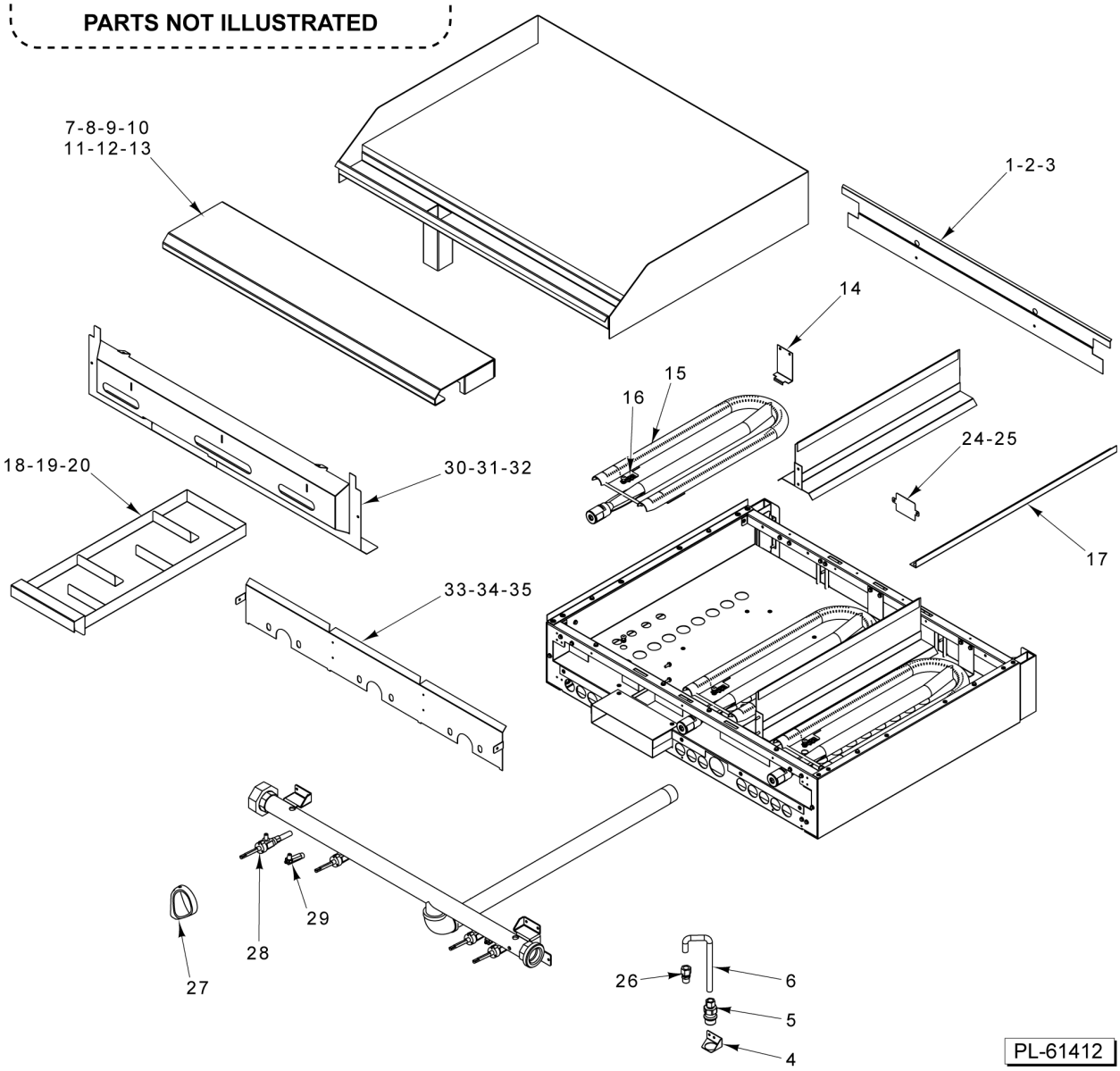

18/24/36 IN MANUAL CONTROL GRIDDLE TOP

18/24/36 IN MANUAL CONTROL GRIDDLE TOP

ILLUS. PL-61412	PART NO.	NAME OF PART	AMT.
1	00-957961-00001	Panel - Rear Closure 36" (Alum.) (36" Griddle Top)	1
2	00-957989-00001	Panel - Rear Closure 24" (24" Griddle Top)	1
3	00-957993-00001	Panel - Rear Closure 18" (18" Griddle Top)	AR
4	00-499047-00001	Bracket - Disconnect	1
5	00-499555-00001	Disconnect - Gas Female	1
6	00-426509-00010	Tube - Flex 1/2" O.D. 10" Lg.	1
7	00-499425-000G1	Front Top Assy. (36" Griddle Top)	1
8	00-956705-000G1	Front Top Assy. (24" Griddle Top)	1
9	00-956658-000G1	Front Top Assy (18" Griddle Top)	1
10	00-957235-000G1	Front Top Assy - Condiment Rail (36" Griddle Top)	1
11	00-957239-000G1	Front Top Slide Rail Assy. (36" Griddle Top)	1
12	00-957357-000G1	Front Top Assy. - Condiment Rail (24" Griddle Top)	1
13	00-957235-000G1	Front Top Assy - Condiment Rail 18" Griddle Top	1
14	00-499112-00001	Bracket - Griddle Burner Support	3
15	00-499635-00001	Griddle Burner Assy	3
16	00-413302-00001	Clip - Pilot Mounting	3
17	00-497984-00001	Retainer - Grate	2
18	00-957982-000G4	Grease Drawer Assy. (36" Griddle Top)	1
19	00-956709-000G4	Grease Drawer Assy. (24" Griddle Top)	1
20	00-956677-000G4	Grease Drawer Assy. (18" Griddle Top)	1
21	00-499622-000G2	36 In Griddle Assy	1
22	00-499957-000G2	24 In Griddle Assy	1
23	00-956674-000G2	18 In Griddle Assy	1
24	00-956662-00001	Cover - Rear Manifold	1
25	00-956710-00001	Cover - Hot Top 24" Griddle	1
26	FP-012-02	Fitting - Tube 1/2 TBG X 3/8 MPT	1
27	00-499712-00001	Knob - HD Burner	AR
*28	00-957367-00001	Valve - Burner	AR
29	00-499970-00001	Valve - Pilot Quick Disconnect	AR
30	00-957604-000G2	Cover - Manifold 36" Thermo Griddle (Condiment Rail)	1
31	00-957602-000G2	Cover - Manifold 24" Therno Griddle (Condiment Rail)	1
32	00-957594-000G1	Cover - Manifold 18" Thermo Griddle	1
33	00-957396-00002	Baffle - Griddle	1
34	00-957988-00002	Baffle - 24" Forward Griddle	1
35	00-957992-00002	Bafffle - 18" Forward Griddle	1
36	00-957170-000G1	Griddle Baffle Assy. Center	2
37	00-788541-0000A	Tube - Pilot, Flex (W/Tip)	2
38	00-956939-00002	Tube - Pilot, Flex (W/Tip)	1
39	00-010901-00042	Orifice - Spud (Nat. Gas) FOR SEA LEVEL TO 2499'	1
40	00-010901-00052	Orifice - Spud (LP Gas) FOR SEA LEVEL TO 2499'	1

* Must Order Orifice Spud Separately Item 39 for Natural and Item 40 for

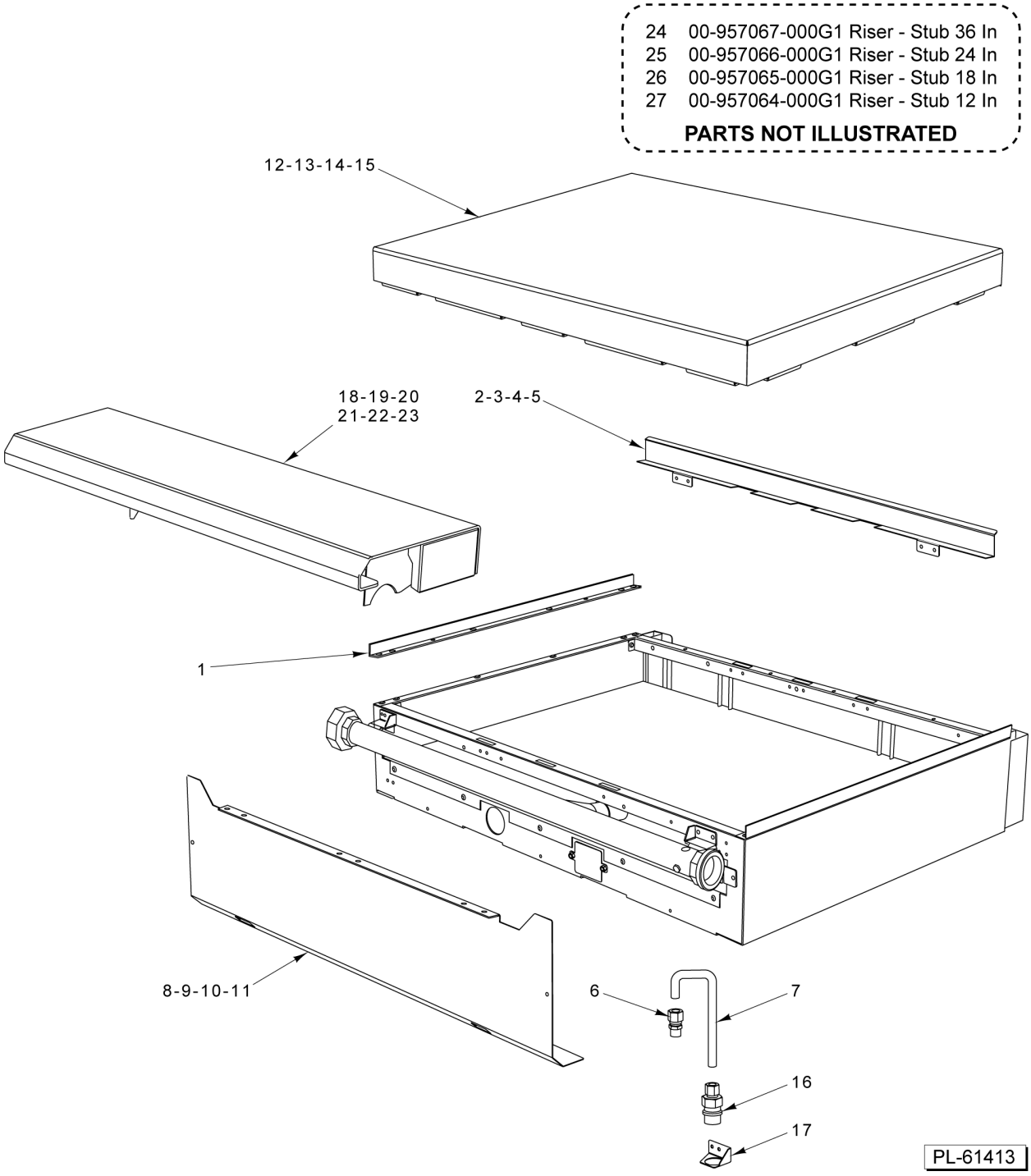

12/18/24/36 IN WORK TOP

12/18/24/36 IN WORK TOP

ILLUS. PL-61413	PART NO.	NAME OF PART	AMT.
1	00-497984-00001	Retainer - Grate	2
2	00-499615-00002	Deflector - Rear (SST) (36" Work Top)	1
3	00-956725-00002	Deflector - Rear (SST) (24" Work Top)	1
4	00-956697-00002	Deflector - Rear (SST) (18" Work Top)	1
5	00-499935-00002	Deflector - Rear (SST) (12" Work Top)	1
6	FP-012-02	Fitting - Tube 1/2 TBG X 3/8 MPT	1
7	00-426509-00010	Tube - Flex 1/2" O.D. 10" Lg	1
8	00-957590-00001	Cover Manifold (36" Work Top)	1
9	00-957572-00001	Cover Manifold (24" Work Top)	1
10	00-957566-00001	Cover - Manifold (18" Work Top)	1
11	00-957558-00001	Cover - Manifold (12" Work Top)	1
12	00-956639-000G1	Work Top Assy. 36"	1
13	00-956639-000G2	Work Top Assy. 24"	1
14	00-956639-000G3	Work Top Assy. 18"	1
15	00-956639-000G4	Work Top Assy. 12"	1
16	00-499555-00001	Disconnect - Gas Female	1
17	00-499047-00001	Bracket - Disconnect	1
18	00-499425-000G1	Front Top Assy. (36" Work Top)	1
19	00-957235-000G1	Front Top Assy - Condiment Rail (36" Work Top)	1
20	00-956705-000G1	Front Top Assy. (24" Work Top)	1
21	00-957357-000G1	Front Top Assy. - Condiment Rail (24" Work Top)	1
22	00-956658-000G1	Front Top Assy (18" Work Top)	1
23	00-499966-000G1	Front Top Assy. (12" Work Top)	1
24	00-957067-000G1	Riser - Stub 36" W/Alum. Back	1
25	00-957066-000G1	Riser - Stub 24" W/Alum. Back	1
26	00-957065-000G1	Riser - Stub 18" W/Alum. Back	1
27	00-957064-000G1	Riser - Stub 12" W/Alum. Back	1

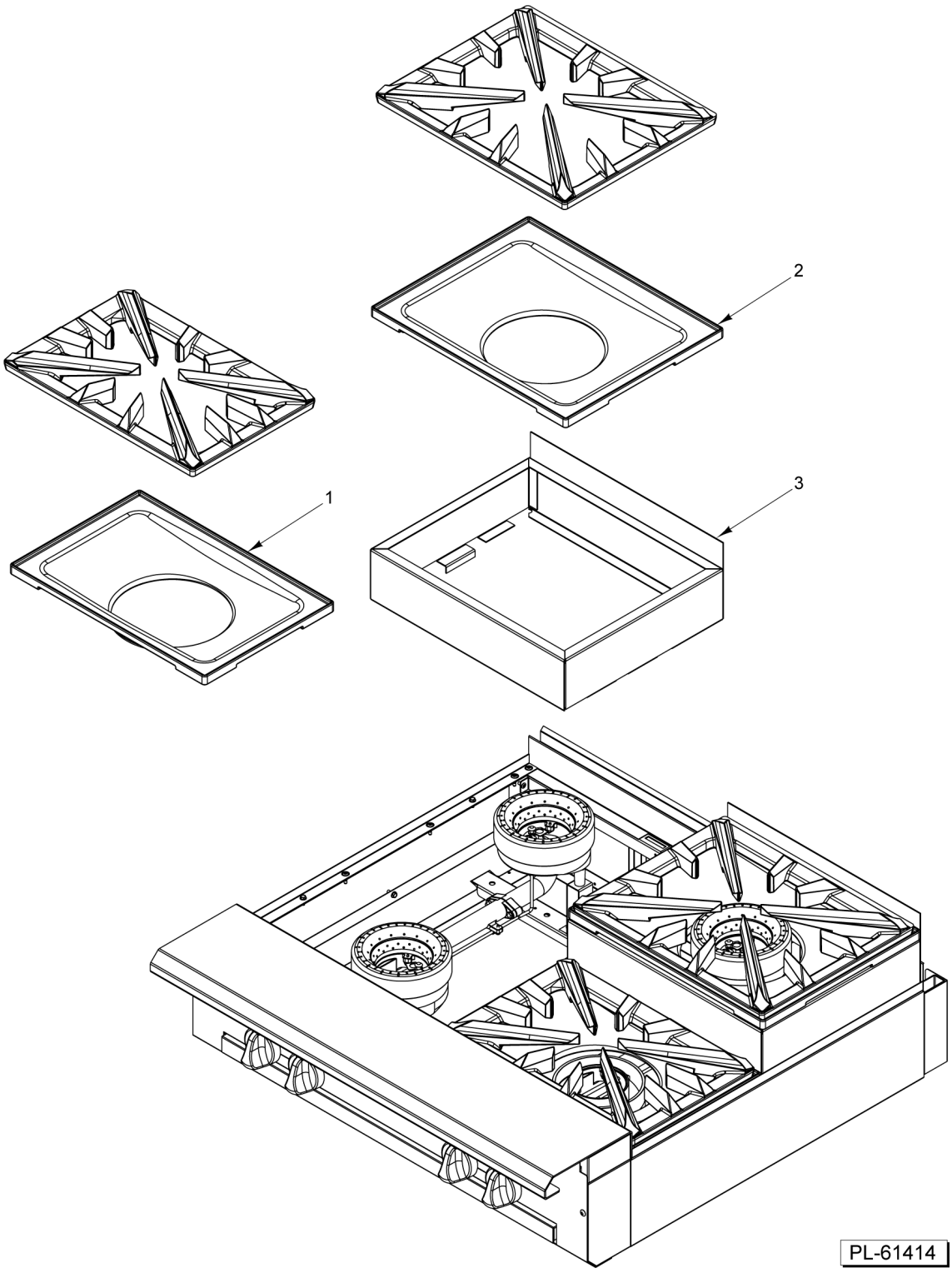

18/36 IN STEP UP OPEN TOP BURNER

18/36 IN STEP UP OPEN TOP BURNER

ILLUS. PL-61414	PART NO.	NAME OF PART	AMT.
1	00-957882-00001	Bowl - Front 18' Step Up	2
2	00-957881-00001	Bowl - Rear 18: Step Up	2
3	00-957877-000G1	Frame - 18" Step Up	2

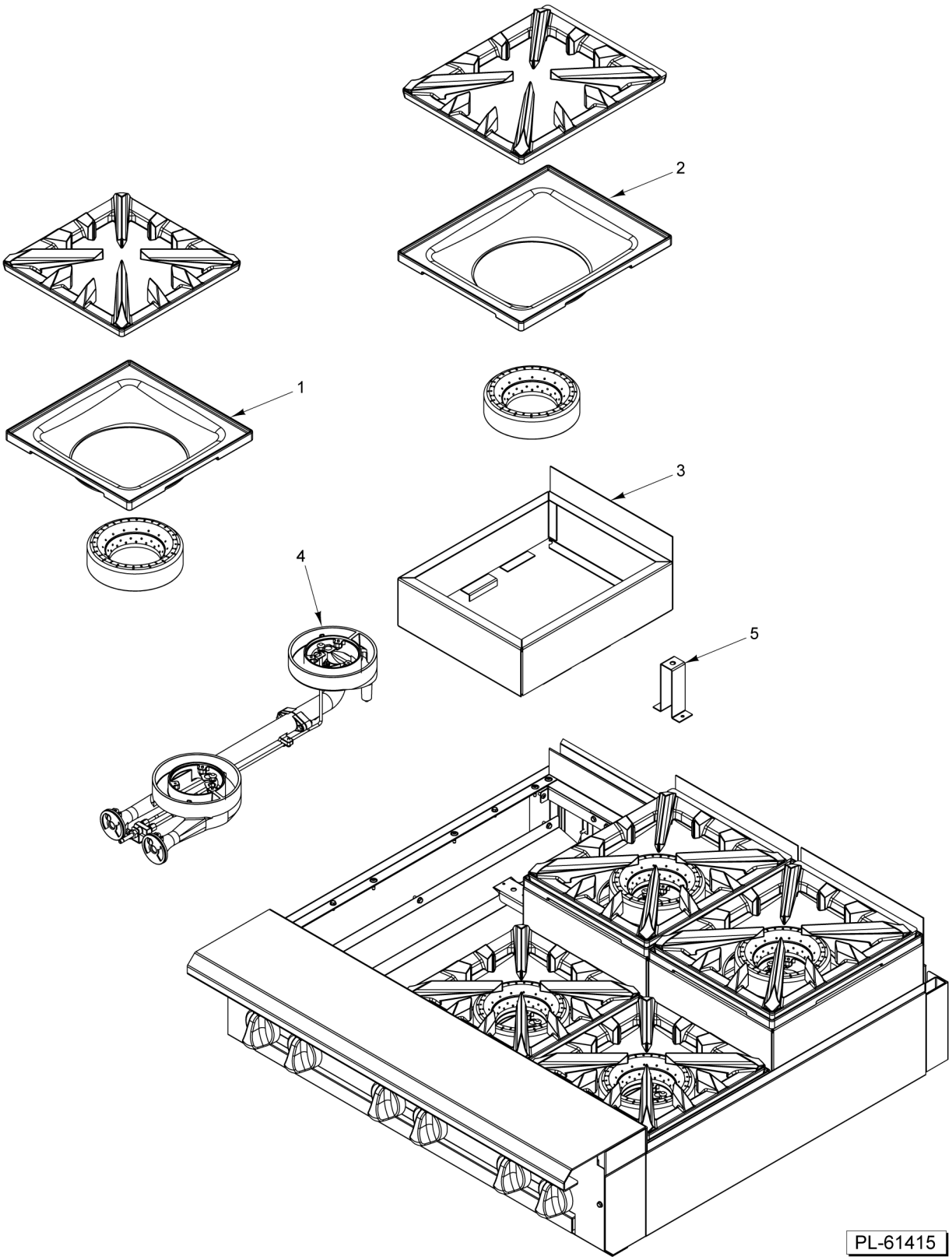

36 IN 6 OPEN TOP STEP UP BURNER

36 IN 6 OPEN TOP STEP UP BURNER

ILLUS. PL-61415	PART NO.	NAME OF PART	AMT.
1	00-957878-00001	Bowl - 12" Front	1
2	00-958879-00001	Bowl - 12" Rear	1
3	00-957877-000G1	Frame - 18" Step Up	1
4	00-957817-000G1	Burner Assy. - Step Up	AR
5	00-957880-00001	Support - Burner Step Up	AR

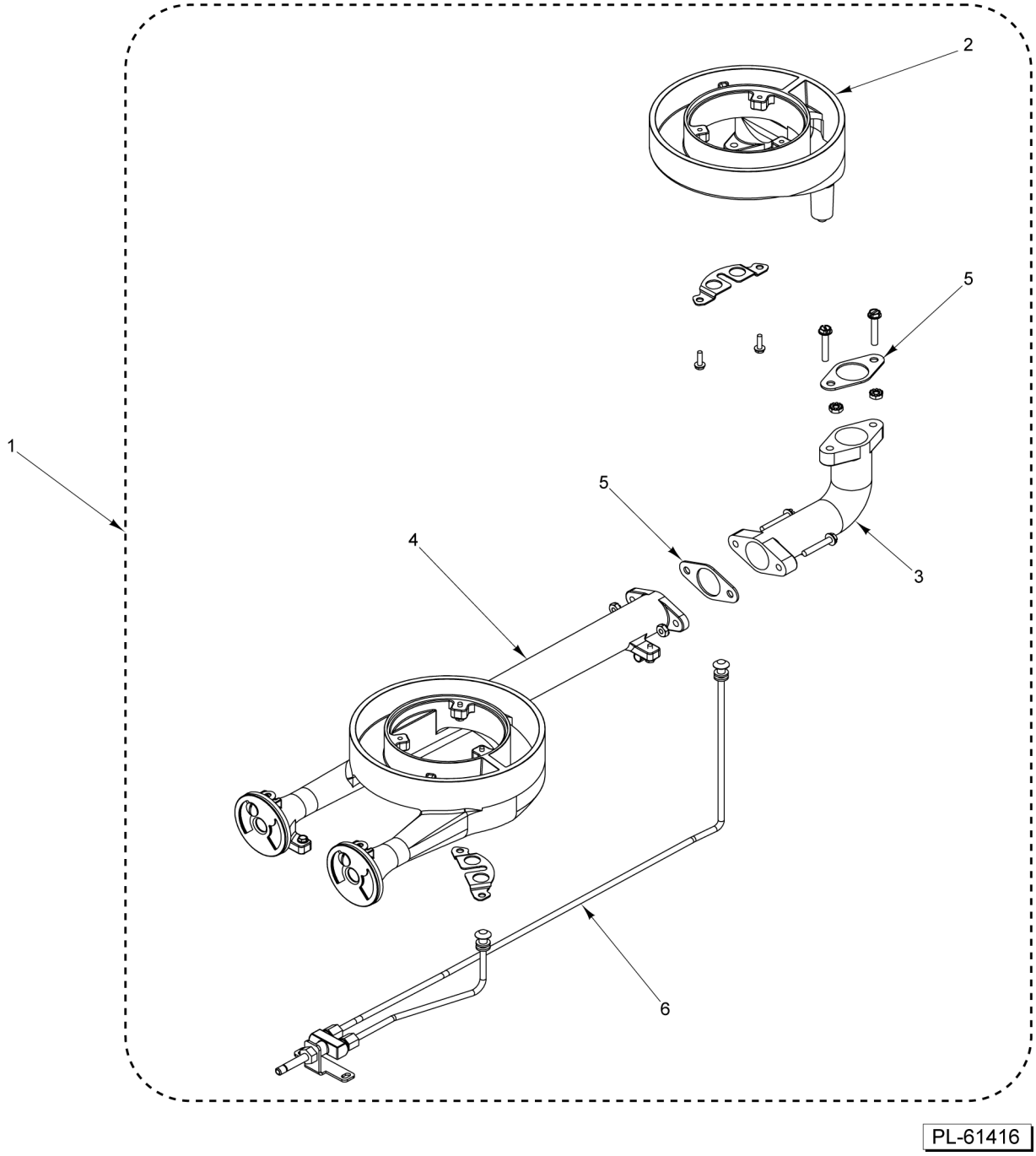

STEP UP BURNER ASSEMBLY

STEP UP BURNER ASSEMBLY

ILLUS. PL-61416	PART NO.	NAME OF PART	AMT.
1	00-957817-000G1	Burner Assy. - Step Up	1
2	00-957826-00001	Burner - Rear Step Up	1
3	00-957825-00001	Elbow - Center Step Up	1
4	00-957824-00001	Burner - Front Step Up	1
5	00-957823-00001	Gasket	1
6	00-959108-000G2	Pilot Assy. - Step Up	1