SERVICE MANUAL



24183

K40GL Shown

K Series Gas Kettles 2/3 Jacketed Stationary and Tilting

K20GL	**ML-136090**
K40GL	**ML-136091**
K60GL	**ML-136092**
K20GLT	**ML-136094**
K40GLT	**ML-136095**
K60GLT	**ML-136096**

- NOTICE -

This Manual is prepared for the use of trained Hobart Service Technicians and should not be used by those not properly qualified.

This manual is not intended to be all encompassing. If you have not attended a Hobart Service School for this product, you should read, in its entirety, the repair procedure you wish to perform to determine if you have the necessary tools, instruments and skills required to perform the procedure. Procedures for which you do not have the necessary tools, instruments and skills should be performed by a trained Hobart Service Technician.

The reproduction, transfer, sale or other use of this manual, without the express written consent of Hobart, is prohibited.

This manual has been provided to you by ITW Food Equipment Group LLC ("ITW FEG") without charge and remains the property of ITW FEG, and by accepting this manual you agree that you will return it to ITW FEG promptly upon its request for such return at any time in the future.

TABLE OF CONTENTS

SERVICE UPDATES 4
SERVICE UPDATES 4

GENERAL 5
INTRODUCTION 5
MODELS COVERED 5
CONTROL PANEL 6
TOOLS 6
SPECIFICATIONS 6
OPERATION, CLEANING AND MAINTAINENCE 7

REMOVAL AND REPLACEMENT OF PARTS 8
CONTROL BOX COVER (TILTING) 8
CORNER & REAR PANELS (TILTING) 8
SIDE & REAR PANELS (STATIONARY) 8
BOTTOM COVER 9
ELECTRICAL PANEL COMPONENTS 9
CONTROL BOX (TILTING) 9
KETTLE CONTROL AREA 9
PRESSURE SWITCH (1PAS) 10
GAS VALVE 11
BLOWER 11
BURNER 12
SPARK IGNITOR 13
GAS SHUT-OFF VALVE (1SOL) - TILTING MODELS ONLY 14
GEAR REDUCER - MANUAL TILTING MODELS 15
ELECTRICAL PANEL COMPONENTS - POWER TILTING OPTION ONLY 16
TILT SWITCH (2S) - POWER TILTING OPTION ONLY 16
DOWN LIMIT SWITCH (3S) - POWER TILTING OPTION ONLY 16
DC TILT MOTOR - POWER TILTING OPTION ONLY 17
GEAR REDUCER - POWER TILTING OPTION ONLY 17

SERVICE PROCEDURES AND ADJUSTMENTS 20
TEMPERATURE CONTROLLER TEST 20
POTENTIOMETER TEST 21
THERMOCOUPLE TEST 21
VENTING 22
FILLING THE RESERVOIR JACKET 23
PARTIAL REFILL 23
COMPLETE DRAINING AND REFILL 24
BLOWER INLET PRESSURE CHECK ENDING AT SN 46-3028411 25
BLOWER INLET PRESSURE CHECK 2ND GENERATION STARTING AT SN 46-3028412 25
GAS VALVE/BLOWER INLET PRESSURE CHECK (108W) 26
TO ADJUST: 27
GAS VALVE/BLOWER INLET PRESSURE CHECK (130W) 27
GAS VALVE/BLOWER INLET PRESSURE CHECK FOR 2ND GENERATION
STARTING AT SN 46-3028412 28
TO ADJUST: 29
SPARK IGNITION TEST 29
FLAME SENSE CURRENT TEST 30
IGNITION CONTROL MODULE TEST 31
TILT SWITCH (2S) ADJUSTMENT - MANUAL TILTING MODELS 32
KETTLE TILT ADJUSTMENT - MANUAL TILTING MODELS 32
TILT SWITCH (2S) ADJUSTMENT - POWER TILTING OPTION ONLY 34
DOWN LIMIT SWITCH (3S) ADJUSTMENT - POWER TILTING OPTION ONLY 34
DC TILT MOTOR CONTROLLER TEST - POWER TILTING OPTION ONLY 34
SETTING RESISTOR ON CONTROLLER SPEED BOARD 36

ELECTRICAL OPERATION 37
COMPONENT FUNCTION (STATIONARY & TILTING MODELS) 37
COMPONENT FUNCTION (POWER TILTING OPTION) 38
COMPONENT LOCATION (STATIONARY & TILTING MODELS) 39
SEQUENCE OF OPERATION (KETTLE CONTROL CIRCUIT) 42
SEQUENCE OF OPERATION (POWER TILTING OPTION) 44
SCHEMATIC DIAGRAM (STATIONARY & TILTING MODELS) 46
SCHEMATIC DIAGRAM (POWER TILTING OPTION) 48

TROUBLESHOOTING 50
STATIONARY & TILTING - GENERAL 50
POWER TILTING OPTION ONLY 52

© VULCAN 2022

SERVICE UPDATES

SERVICE UPDATES

May 2022
- Updated TEMPERATURE CONTROLLER TEST.

April 2022
- Update GAS VALVE/BLOWER INLET PRESSURE CHECK FOR 2ND GENERATION STARTING AT SN 46-3028412.

November 2020
- Update BLOWER INLET PRESSURE CHECK 2ND GENERATION STARTING AT SN 46-3028412.

September 2020
- Updated TOOLS.
- Updated SPECIFICATIONS.
- Updated ELECTRICAL PANEL COMPONENTS.
- Updated THERMOCOUPLE TEST.
- Updated VENTING.
- Updated FILLING THE RESERVOIR JACKET.
- Added BLOWER INLET PRESSURE CHECK 2ND GENERATION STARTING AT SN 46-3028412.
- Updated STATIONARY & TILTING - GENERAL .
- Updated STATIONARY & TILTING - GENERAL .

October 2017
- Updated FILLING THE RESERVOIR JACKET.
- Updated GAS VALVE/BLOWER INLET PRESSURE CHECK (108W).

GENERAL

INTRODUCTION

General

The procedures in this manual apply to all models unless otherwise specified. The pictures and illustrations are of a model K40GLT floor model tilting kettle unless otherwise noted. All information and specifications contained in this manual are based on the latest product information available at the time of printing.

K Series - Tilting Kettles

The tilting kettles models are offered with a manual tilt mechanism as standard and are available with an optional power tilt to automatically lower and raise the kettle. Kettles with the power tilt option can still be operated manually using the crank handle as needed.

K Series - Floor Model Kettles

The 2/3 jacketed gas kettles are self contained. The lower two thirds of the kettle bowl is a double wall stainless steel construction that provides a reservoir for a solution of heat transfer fluid and distilled water for improved heating of the kettle contents. The kettles are used to prepare a variety of liquid or semi-liquid food products such as soups, stews and sauces.

MODELS COVERED

All K Series kettles are mounted to the floor using legs with flanged feet for anchoring.

Model	Type	Gallons	Quarts
K20GL	Stationary	20	80
K40GL	Stationary	40	160
K60GL	Stationary	60	240
K20GLT	Tilting	20	80
K40GLT	Tilting	40	160
K60GLT	Tilting	60	240

CONTROL PANEL

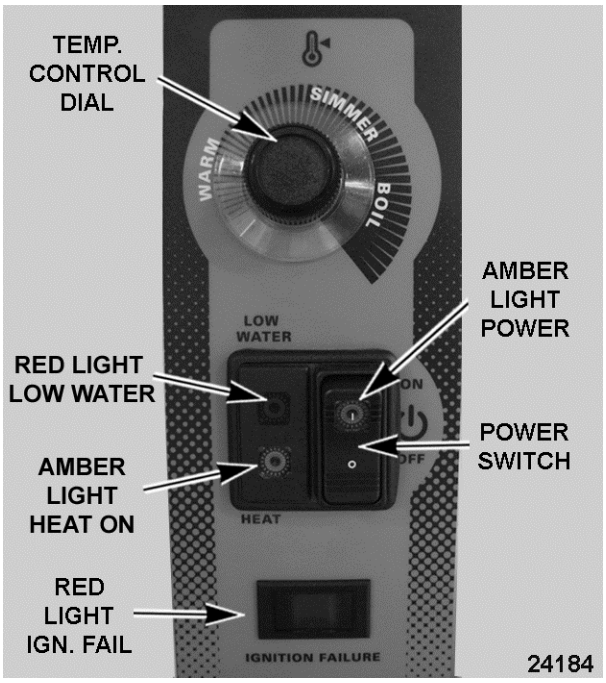

Fig. 1

TOOLS

Standard

- Standard set of hand tools.
- Pipe thread sealant (must be resistant to the action of propane gases).
- VOM with an AC current tester (meter sensitivity should be at least 20,000 ohms per volt).
- Temperature meter (thermocouple type) for checking kettle temperature.
- Manometer capable of reading at least 16" W.C. of gas pressure.
- Container that is capable of holding at least 8 gallons of drained reservoir jacket fluid.

Special

- Torque wrench capable of tightening combustion chamber mountings nuts to 30 ft-lbs.
- 36mm socket to remove sight glass for jacket fluid draining.
- Requires U-inclined (Grainger P/N 3T294) or digital (Grainger P/N 1XFW2) manometer for measuring gas pressures and blower air pressures.
- Heat transfer fluid. Can be ordered from www.chemworld.com Refer to FILLING THE RESERVOIR JACKET for volumes.
- Distilled water only for re-filling of the jacket (purchase locally). Refer to FILLING THE RESERVOIR JACKET for volumes.
- Drill Pump.

SPECIFICATIONS

Electric

- 120VAC / 60HZ / 1 phase.
- 5 amp rating.
- Supplied with 6 foot power cord and 3-prong grounding plug (proper ground required).

NOTE: Machines with electronic ignition systems should be connected to a standard 120VAC electrical outlet rather than a ground fault circuit interrupter (GFCI) if possible. Machines connected to certain GFCI circuits may repeatedly nuisance trip the GFCI. If the machine must be connected to a GFCI, use Part No. 913053 (Pass and Seymour) approved by engineering for use with electronic ignition systems.

Gas Supply

NOTICE

The gas supply pressure must not exceed 14” WC (½ PSI). Pressures higher than 14” WC will damage the equipment’s gas controls and is not covered under warranty. If the supply pressure exceeds 14” WC an additional supply line regulator rated for the supply line pressure (inches WC), nominal pressure (OUT), and gas flow for the kettle BTU rating must be installed.

Span gas technology enables "field adjustable manifold pressure" from natural to propane gas or propane to natural. All kettles shipped for natural gas at sea level atmospheric pressure. Requires a U-Inclined or digital manometer. See TOOLS.

Refer to F35461 Installation & Operation Manual for specific instructions on GAS CONNECTIONS and GAS AND ALTITUDE ADJUSTMENTS. A combustion analyzer is required for gas type conversions and altitude adjustments as outlined in these procedures.

GAS SUPPLY PRESSURES				
GAS TYPE	**Manifold (in W.C.)**	**NOMINAL (in W.C.)**	**MIN (in W.C.)**	**MAX (in W.C.)**
Natural	Low Speed * - 0.27 to 0.30 High Speed - 1.91 to 1.98	7	5	10.5
Propane	Low Speed * - 0.27 to 0.30 High Speed - 1.91 to 1.98	11	11	13
*** Low Speed – Blower operates at low speed during trial for ignition (approximately 7 seconds). Ignition is successful and burner lights. Blower switches to high speed for normal operation approximately 8 seconds later (total time delay of 15 sec. to high speed) and runs until set point temperature is satisfied. Cycle repeats upon call for heat.**				

Kettle Rating

All models listed on front cover have an input BTU rating of 100,000 BTU/HR.

OPERATION, CLEANING AND MAINTAINENCE

Refer to F35461 Installation & Operation Manual for specific instructions. The manual includes:

- A page from the Stainless Steel Care and Cleaning Guide for proper care and cleaning of stainless steel.
- Draw-Off Valve and Plug Valve dissassembly & cleaning instructions.

REMOVAL AND REPLACEMENT OF PARTS

CONTROL BOX COVER (TILTING)



⚠ WARNING

Disconnect the electrical power to the machine and follow lockout / tagout procedures.

NOTE: Remove screws from cover where indicated.

NOTE: On kettles with manual tilt or power tilt option, the control box height is now taller (as shown) to acomodate additional tilt components. The cover is held in place using the same number of screws.

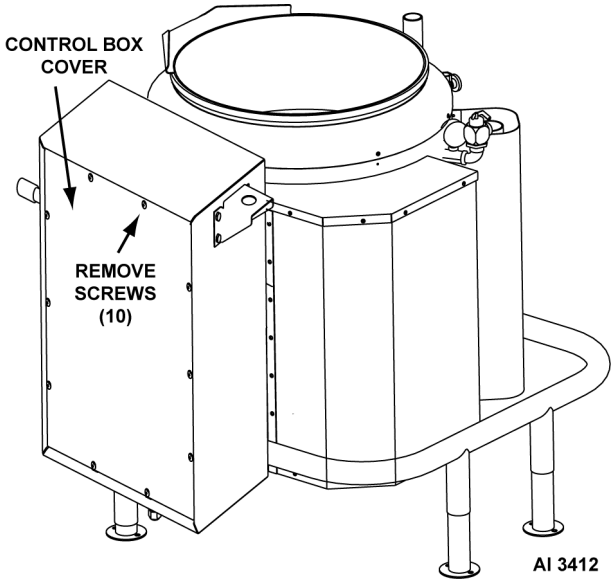

K20GLT Manual Tilt Shown

CORNER & REAR PANELS (TILTING)



⚠ WARNING

Disconnect the electrical power to the machine and follow lockout / tagout procedures.

NOTE: Remove screws from panel where indicated.

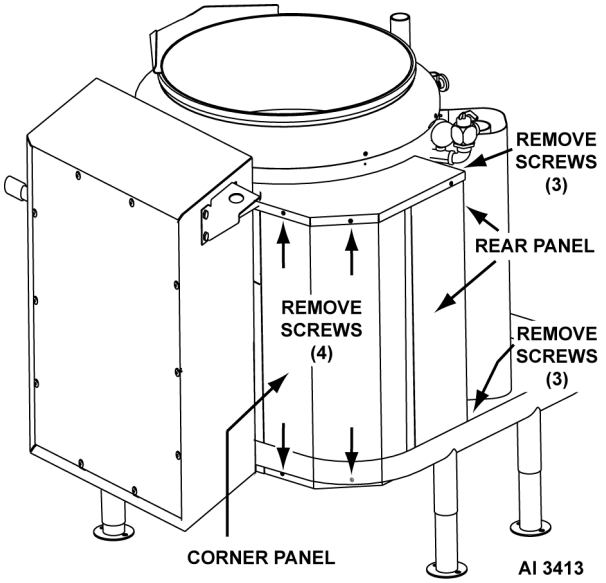

K20GLT Manual Tilt Shown

SIDE & REAR PANELS (STATIONARY)



⚠ WARNING

Disconnect the electrical power to the machine and follow lockout / tagout procedures.

NOTE: Remove screws from panel where indicated.

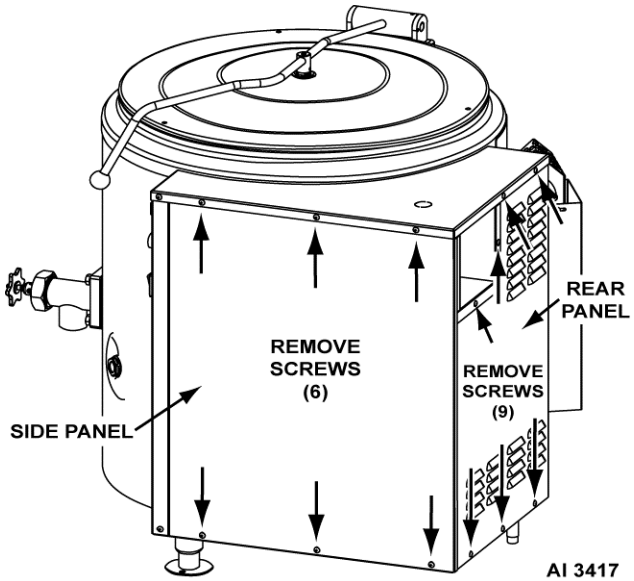

K20GL Shown

BOTTOM COVER



⚠ WARNING

Disconnect the electrical power to the machine and follow lockout / tagout procedures.

NOTE: Remove screws from cover where indicated.

- Tilting models - tilt kettle to empty contents and gain access to bottom components.
- Stationary models - use draw off valve to empty contents.
    - Raise the kettle for easier access to the bottom components as necessary. Support the kettle in some manner (2x4 blocks etc.) while work is being performed.

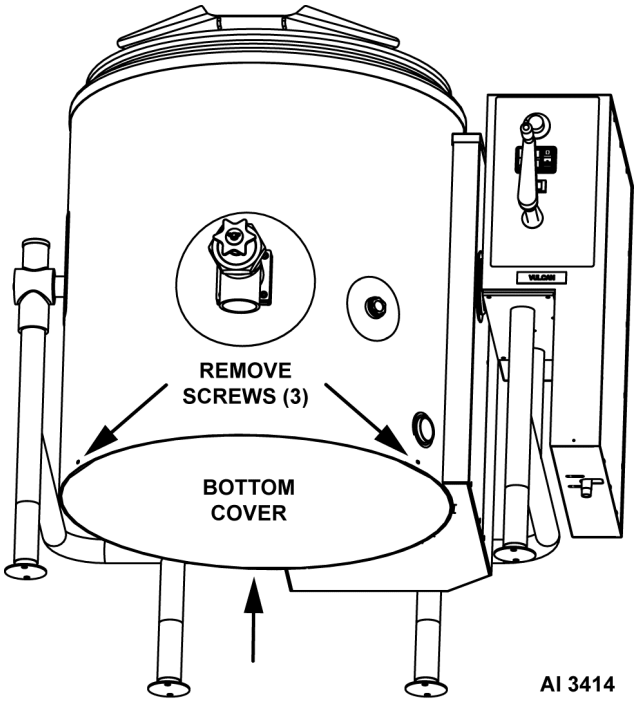

K20GLT Manual Tilt Shown

ELECTRICAL PANEL COMPONENTS



⚠ WARNING

Disconnect the electrical power to the machine and follow lockout / tagout procedures.

NOTE: Pictures show the electrical panel components for a tilting kettle (control box & kettle control area). On a stationary kettle, all the electrical panel components are mounted in the kettle control area.

CONTROL BOX (TILTING)

1. Remove CONTROL BOX COVER (TILTING).
2. Disconnect lead wires from component being replaced.
3. Remove screws securing the component to panel.
4. Reverse procedure to install and check for proper operation.

NOTE: Ensure J1 jumper is installed on temperature controller.

Control Box - K Series Tilting Kettle (Fig. 6)

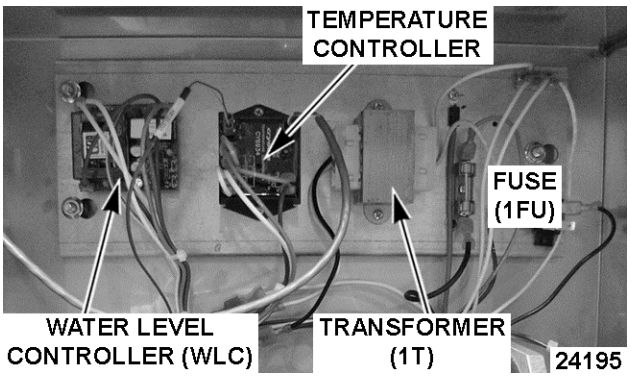

Fig. 6

KETTLE CONTROL AREA

1. Remove CORNER PANEL (TILTING) or SIDE PANEL (STATIONARY).
2. Disconnect lead wires from component being replaced.
3. Remove fastener securing the component to panel.
    A. If installing blower speed control, ensure switches SW1, SW2 & SW4 are properly set as shown in Blower Speed Control - Switch Settings picture in this procedure.
4. Reverse procedure to install and check for proper operation.

Kettle Control Area - K Series Tilting Kettles

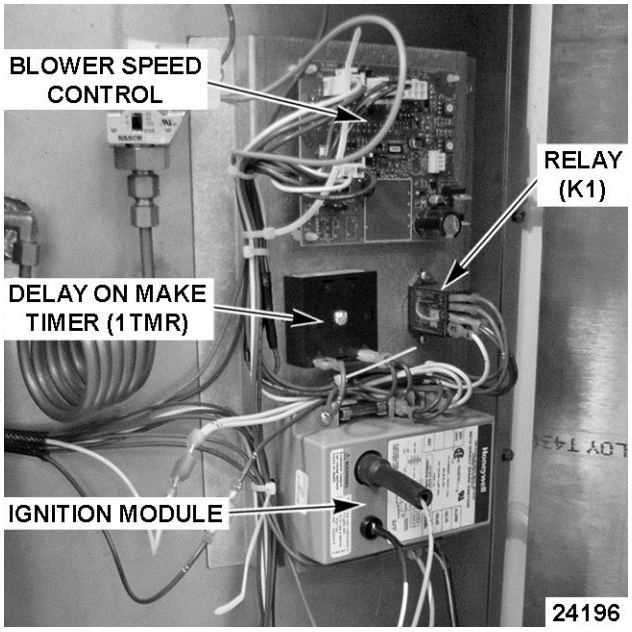

Fig. 7

2ND GENERATION IGNITION MODULE SHOWN IN Fig. 8

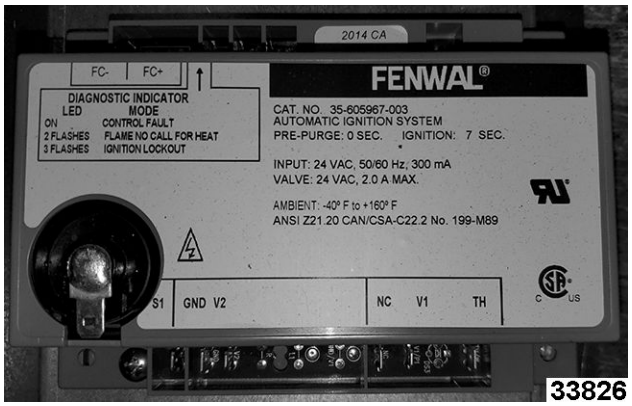

Fig. 8

Blower Speed Control - Switch Settings 1st Generation Motor (Baldor High Fire and Low Fire Settings Shown in Fig. 9)

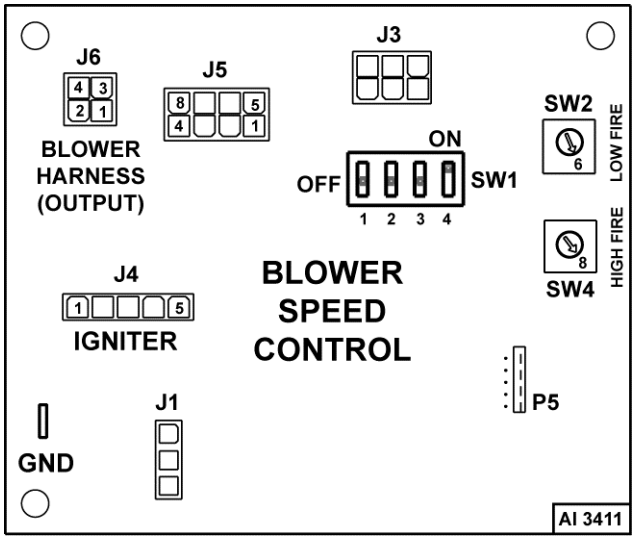

Fig. 9

Blower Speed Control - Switch Settings 2nd Generation Motor (High Fire and Low Fire Settings Shown in Fig. 10)

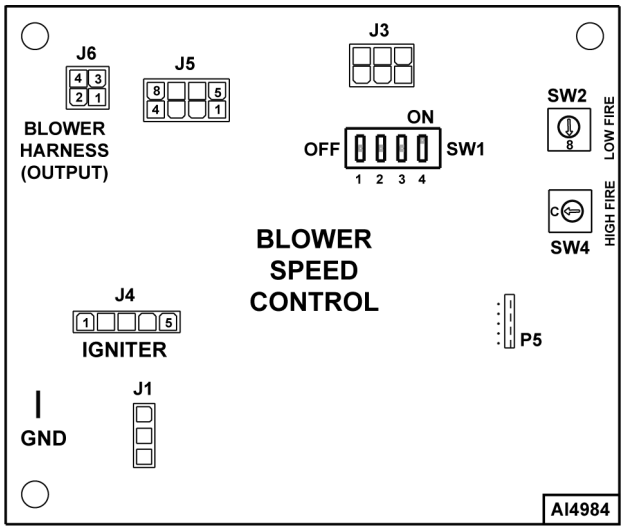

Fig. 10

PRESSURE SWITCH (1PAS)



⚠ WARNING

Disconnect the electrical power to the machine and follow lockout / tagout procedures.

1. Open pressure relief valve until reservoir jacket is completely vented.
2. Remove CORNER PANEL (TILTING) or SIDE PANEL (STATIONARY).
3. Remove pressure switch from tubing.
4. Reverse procedure to install.

5. Remove air from reservoir jacket as outlined under VENTING procedure.
6. Check for proper operation.

NOTE: Pressure switch is set to open at 38-42 PSI.

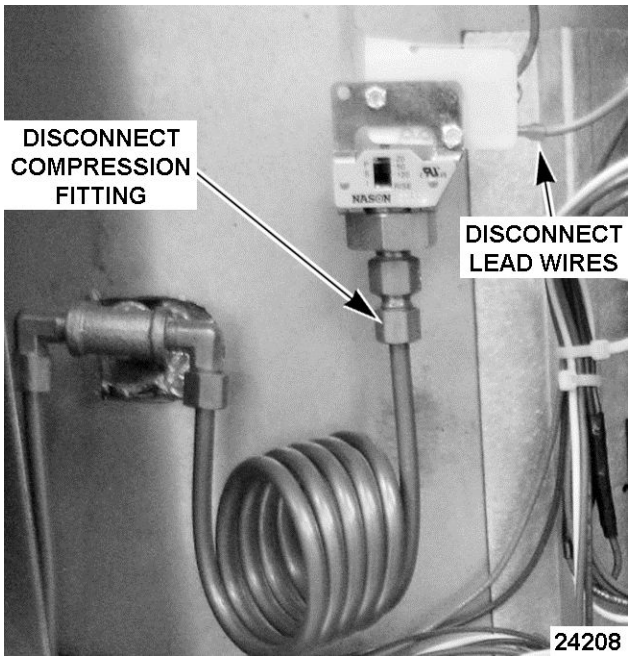

Fig. 11

GAS VALVE



⚠ WARNING

Disconnect the electrical power to the machine and follow lockout / tagout procedures.



⚠ WARNING

Shut off the gas before servicing the unit and follow lockout / tagout procedures.

⚠ WARNING

All gas joints disturbed during servicing must be checked for leaks. Check with a soap and water solution (bubbles). Do not use an open flame.

1. Remove CORNER & REAR PANELS (TILTING) or SIDE & REAR PANELS (STATIONARY).
2. Remove electrical connector from gas valve.
3. Disconnect gas line from gas valve.
4. Remove gas valve from blower.

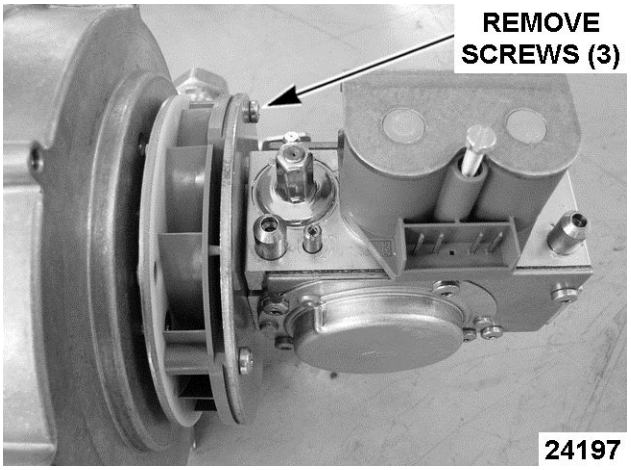

Fig. 12

5. Remove piping from gas valve inlet and install on replacement valve. Ensure the factory tags that are wired to the piping remain installed.

NOTE: Replacement gas valve contains valve plate, orifice and o-ring already assembled. The gas valve/ blower design allows natural and propane gas kettles to use the same orifice size. Labels for gas type are also included.

⚠ WARNING

Clean pipe threads and apply thread sealant that is suitable for use with propane gas.

6. Reverse procedure to install.
7. Affix the appropriate gas label (natural or propane) on top of gas valve.
8. Perform GAS VALVE/BLOWER INLET PRESSURE CHECK (108W).

BLOWER



⚠ WARNING

Disconnect the electrical power to the machine and follow lockout / tagout procedures.

1. Remove GAS VALVE from blower.
2. Remove BOTTOM COVER.
3. Separate burner manifold compression fitting on gas supply tube (feeding burner).

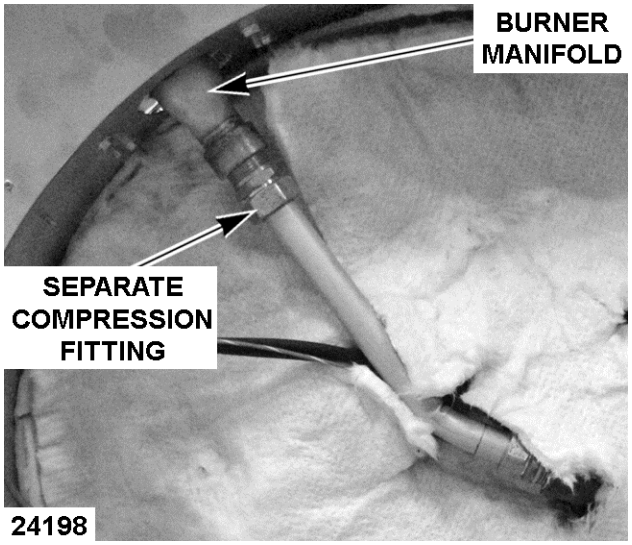

Fig. 13

4. Remove electrical connectors (2) from blower.
5. Remove blower from kettle at burner manifold.

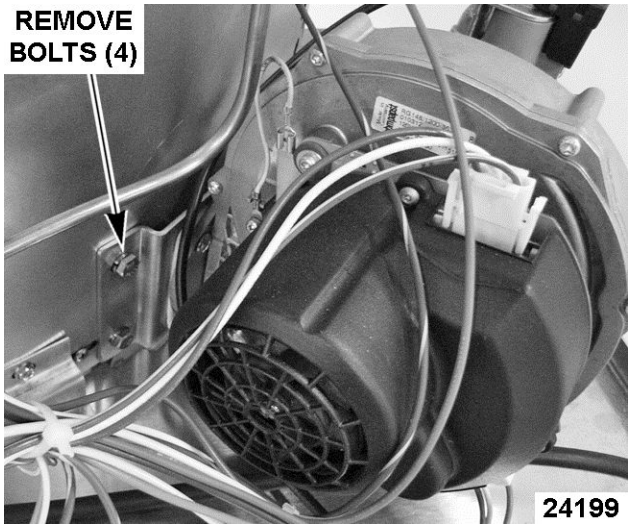

Fig. 14

   A. Remove blower from burner manifold (4 screws).
   B. Remove swirl plate (3 screws) and blower plate (2 screws) from blower intake.

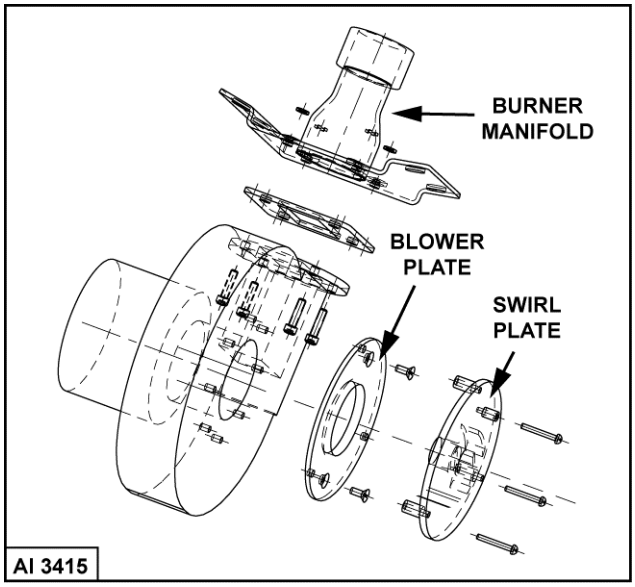

Fig. 15

6. Reverse procedure to install replacement blower and check for proper operation.

NOTE: Install replacement blower gasket as necessary.

BURNER



⚠ WARNING

Disconnect the electrical power to the machine and follow lockout / tagout procedures.



⚠ WARNING

Shut off the gas before servicing the unit and follow lockout / tagout procedures.

⚠ WARNING

All gas joints disturbed during servicing must be checked for leaks. Check with a soap and water solution (bubbles). Do not use an open flame.

1. Remove BOTTOM COVER.
2. Remove clips securing insulation to bottom of kettle.
   A. Gently remove insulation and save for reuse.
3. Disconnect spark ignitor lead wires at the ignition module.
4. Separate compression nuts on gas supply tube.

5. Loosen gas manifold mounting nuts and remove gas supply tube from the fittings.

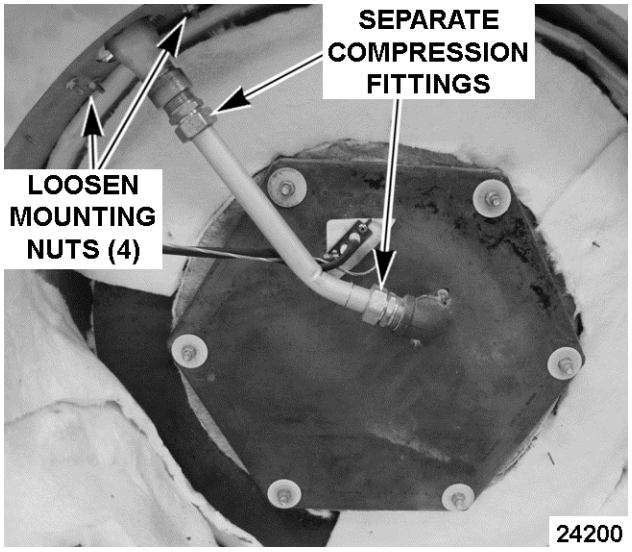

Fig. 16

6. Remove combustion chamber cover from bottom of kettle.

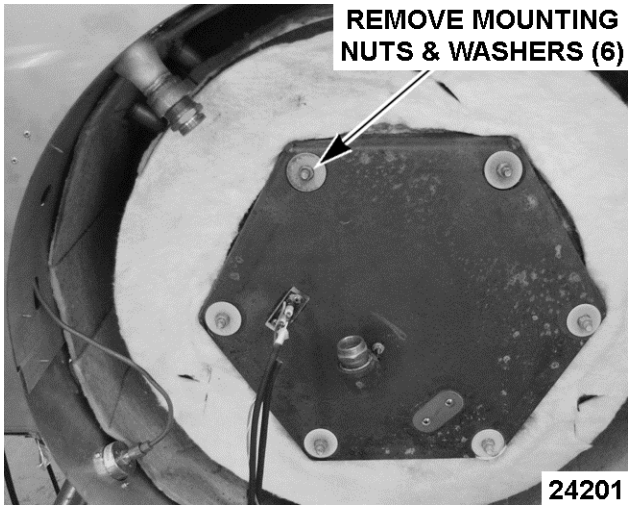

Fig. 17

7. Note alignment of pipe elbow connected to burner. Remove elbow from burner.
8. Remove burner from combustion chamber cover.

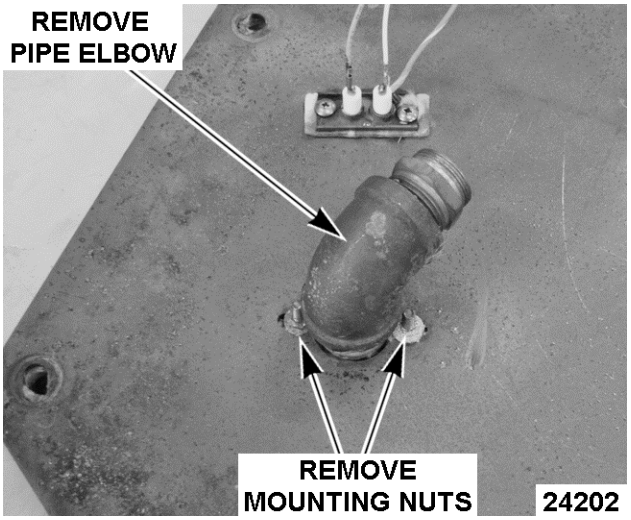

Fig. 18

9. Reverse procedure to install replacement burner and check for proper operation.

⚠ WARNING

Apply pipe thread sealant to burner threads that is suitable for use with propane gas.

NOTE: Torque mounting nuts for combustion chamber cover to 30 ft-lb.

SPARK IGNITOR



⚠ WARNING

Disconnect the electrical power to the machine and follow lockout / tagout procedures.

1. Remove CONTROL BOX COVER (TILTING) or CORNER PANEL (STATIONARY).
2. Disconnect spark ignitor lead wires at ignition module.
3. Remove BOTTOM COVER.
4. Remove clips holding insulation against combustion chamber cover.
5. Remove spark ignitor from combustion chamber cover.

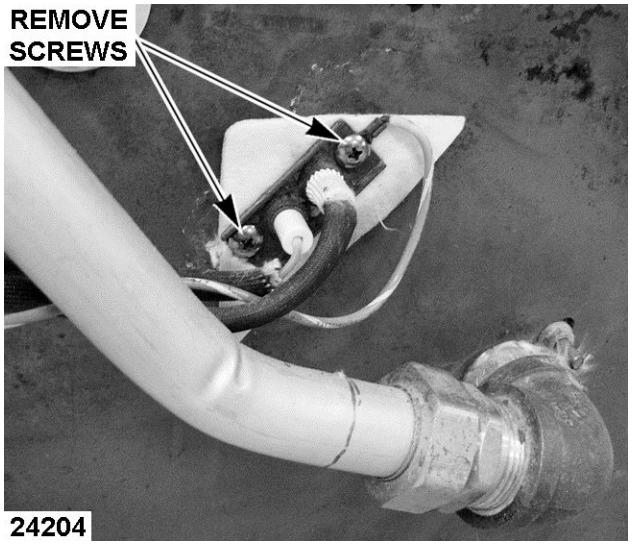

Fig. 19

6. Ensure spark gap between ignitor electrode and ground rod is approximately 1/8". If necessary, adjust as outline under SPARK IGNITION TEST Step 8C.
7. Reverse procedure to install and check for proper operation.

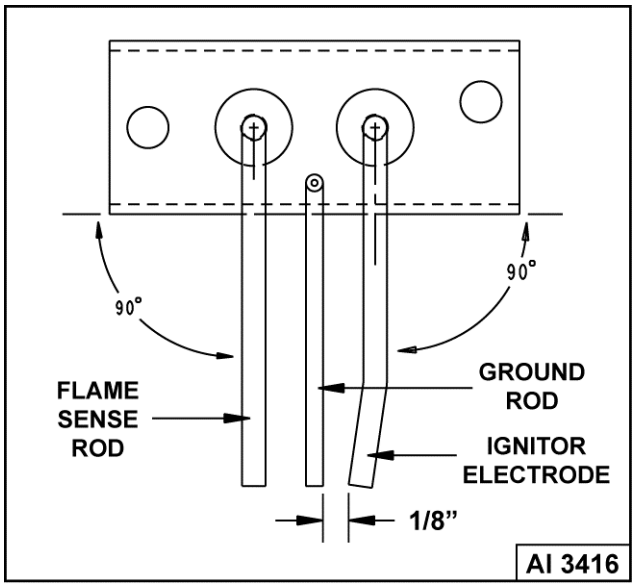

Fig. 20

GAS SHUT-OFF VALVE (1SOL) - TILTING MODELS ONLY



⚠ WARNING

Disconnect the electrical power to the machine and follow lockout / tagout procedures.



⚠ WARNING

Shut off the gas before servicing the unit and follow lockout / tagout procedures.

⚠ WARNING

All gas joints disturbed during servicing must be checked for leaks. Check with a soap and water solution (bubbles). Do not use an open flame.

1. Remove CONTROL BOX COVER (TILTING).
2. Disconnect lead wires for gas shut-off valve (1SOL) at terminal strip in control box.
3. Remove piping from inlet side of valve.
4. Remove threaded plug (NPT) from the ½” swivel fitting secured to end of pivot shaft.

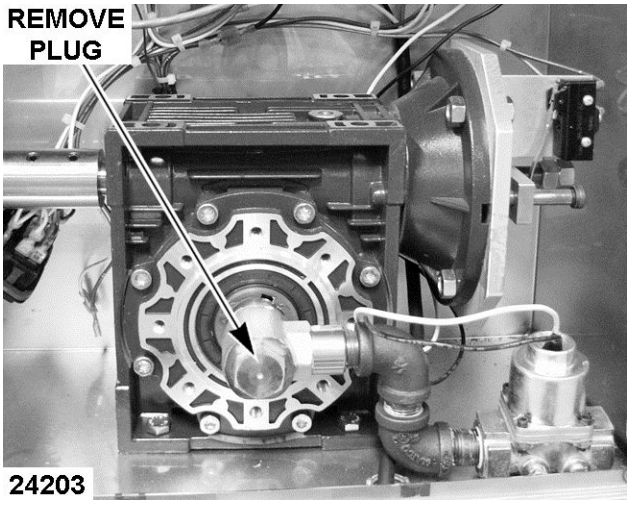

K20GLT Manual Tilt Shown

5. Remove gas shut-off valve from control box.
6. Remove piping from outlet side of valve.
7. Reverse procedure to install replacement gas shut-off valve and check for proper operation.

⚠ WARNING

Clean pipe threads and apply thread sealant that is suitable for use with propane gases.

GEAR REDUCER - MANUAL TILTING MODELS



⚠ WARNING

Disconnect the electrical power to the machine and follow lockout / tagout procedures.



⚠ WARNING

Shut off the gas before servicing the unit and follow lockout / tagout procedures.

⚠ WARNING

All gas joints disturbed during servicing must be checked for leaks. Check with a soap and water solution (bubbles). Do not use an open flame.

1. Place kettle in the fully upright position and remove crank handle.
2. Support kettle from the bottom in some manner (2x4 etc). Raise it slightly to take the kettle arm weight off gear reducer.
3. Remove GAS SHUT-OFF VALVE (1SOL) - TILTING MODELS ONLY.
4. Remove tilt switch (2S) from bracket leaving the lead wires connected.
5. Remove bolts securing gear reducer and control box to kettle frame.

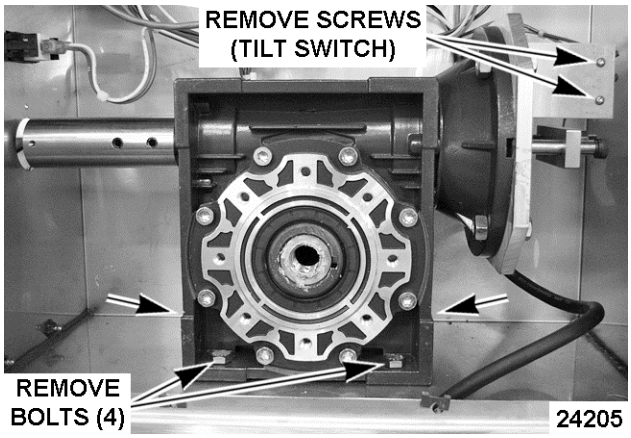

Fig. 22

6. Pull gear reducer away from kettle by working it off the kettle arm until free. Note that the kettle arm is keyed.

NOTE: Control box can be moved as necessary for ease of gear reducer removal.

7. Remove reducer shaft extension from gear reducer shaft.

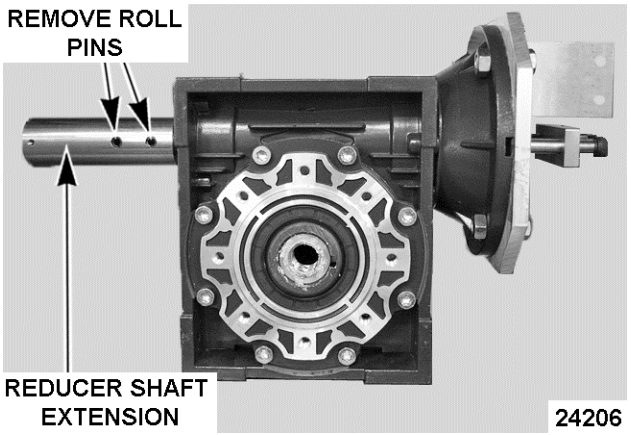

Fig. 23

8. Remove positive stop plate from gear reducer. Note that the positive stop shaft is keyed.

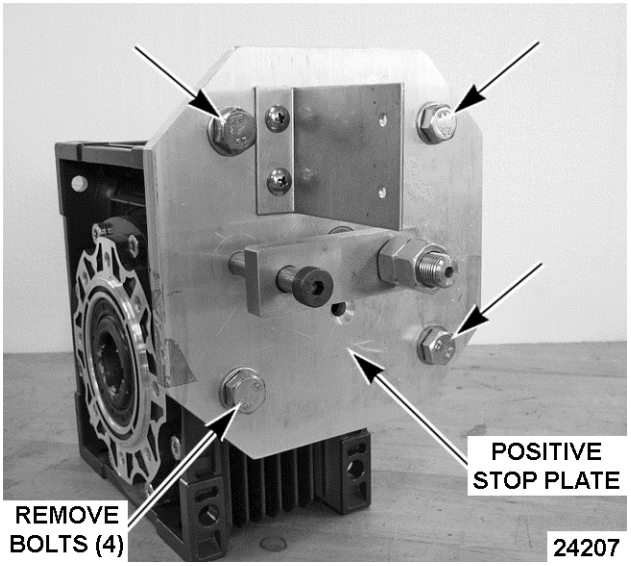

Fig. 24

9. Reverse procedure to install replacement gear reducer.
10. Perform KETTLE TILT ADJUSTMENT - MANUAL TILTING MODELS to check for proper operation.

ELECTRICAL PANEL COMPONENTS - POWER TILTING OPTION ONLY



⚠ WARNING

Disconnect the electrical power to the machine and follow lockout / tagout procedures.

1. Remove CONTROL BOX COVER (TILTING).
2. Disconnect lead wires from component being replaced.
3. Remove screws securing the component to panel.
4. Reverse procedure to install and check for proper operation.

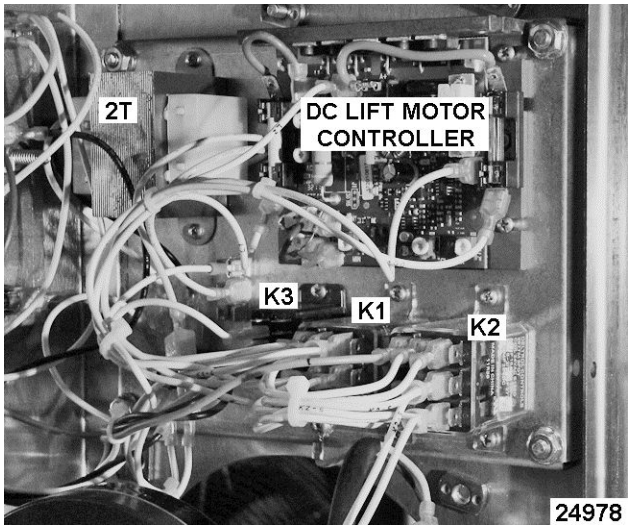

Fig. 25

TILT SWITCH (2S) - POWER TILTING OPTION ONLY



⚠ WARNING

Disconnect the electrical power to the machine and follow lockout / tagout procedures.

1. Place kettle in the fully upright position.
2. Remove CONTROL BOX COVER (TILTING).
3. Note lead wire locations and disconnect from tilt switch (2S).
4. Remove adjustment screws (2) securring switch bracket to mounting plate.
5. Remove mounting nuts and screws (2) securring tilt switch (2S) to bracket.
6. Reverse procedure to install tilt switch (2S).
7. Perform TILT SWITCH (2S) ADJUSTMENT - POWER TILTING OPTION ONLY.

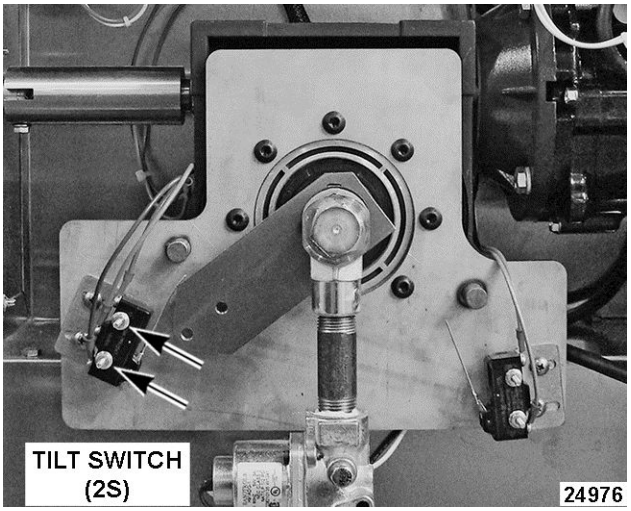

Fig. 26

DOWN LIMIT SWITCH (3S) - POWER TILTING OPTION ONLY



⚠ WARNING

Disconnect the electrical power to the machine and follow lockout / tagout procedures.

1. Place kettle in the fully upright position.
2. Remove CONTROL BOX COVER (TILTING).
3. Note lead wire locations and disconnect from down limit switch (3S).
4. Remove adjustment screws (2) securring switch bracket to mounting plate.
5. Remove mounting nuts and screws (2) securring down limit switch (3S) to bracket.
6. Reverse procedure to install down limit switch (3S).
7. Perform DOWN LIMIT SWITCH (3S) ADJUSTMENT - POWER TILTING OPTION ONLY.

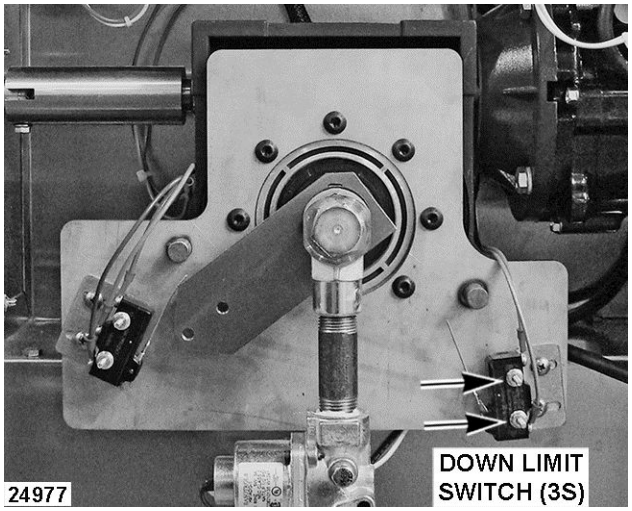

Fig. 27

DC TILT MOTOR - POWER TILTING OPTION ONLY



⚠ WARNING

Disconnect the electrical power to the machine and follow lockout / tagout procedures.

1. Remove CONTROL BOX COVER (TILTING).
2. Remove motor cover from rear of control box.

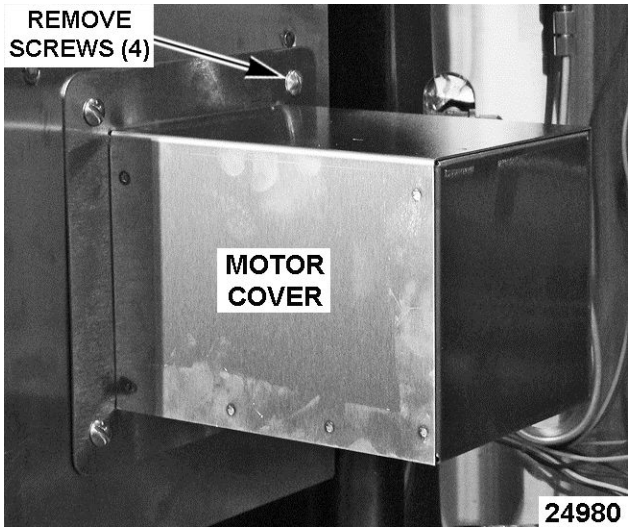

Fig. 28

3. Disconnect DC tilt motor lead wires (2) at quick disconnect terminals. The wires are labeled MTR positive (+) and MTR negative (-).
4. Disconnect motor ground wire.
5. Remove motor mounting bolts and lock washers from gear reducer flange.

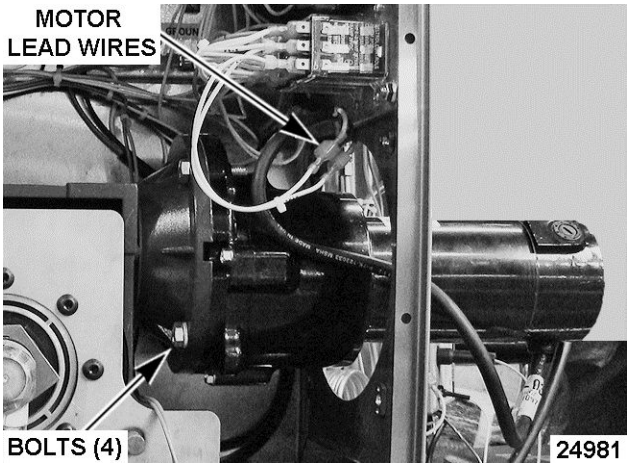

Fig. 29

6. Remove motor from gear reducer.
7. To install:
   A. With drive key on shaft, install motor to gear reducer.
   B. Re-connect motor lead wires.
   C. Replace motor cover and control box cover.
8. Check for proper operation.

GEAR REDUCER - POWER TILTING OPTION ONLY



⚠ WARNING

Disconnect the electrical power to the machine and follow lockout / tagout procedures.



⚠ WARNING

Shut off the gas before servicing the unit and follow lockout / tagout procedures.

⚠ WARNING

All gas joints disturbed during servicing must be checked for leaks. Check with a soap and water solution (bubbles). Do not use an open flame.

1. Place kettle in the fully upright position.
2. Support kettle from the bottom in some manner (2x4 etc.). Raise it slightly to take the kettle pivot shaft weight off gear reducer.
3. Remove TILT SWITCH (2S) - POWER TILTING OPTION ONLY leaving the lead wires connected.

4. Remove DOWN LIMIT SWITCH (3S) - POWER TILTING OPTION ONLY leaving the lead wires connected.
5. Remove GAS SHUT-OFF VALVE (1SOL) - TILTING MODELS ONLY.
6. Remove DC TILT MOTOR - POWER TILTING OPTION ONLY.
7. Loosen set screw securing arm to kettle pivot shaft (keyed).
8. Remove e-clip securing arm to kettle pivot shaft. Note orientation and remove arm from kettle pivot shaft.

NOTE: If installed, note the number of washers in front of and behind the arm on the kettle pivot shaft for re-assembly.

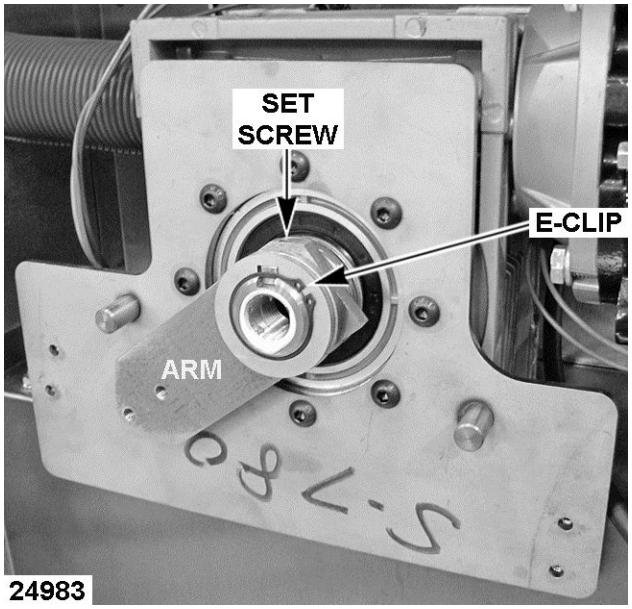

Fig. 30

9. Remove switch mounting plate screws (8) from gear reducer and lift plate away from gear reducer.

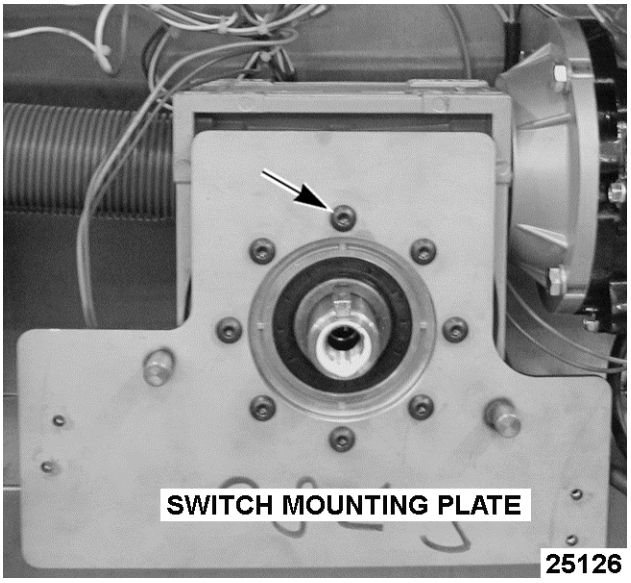

Fig. 31

10. Lift spacer ring off gear reducer. Retain for use on replacement gear reducer.

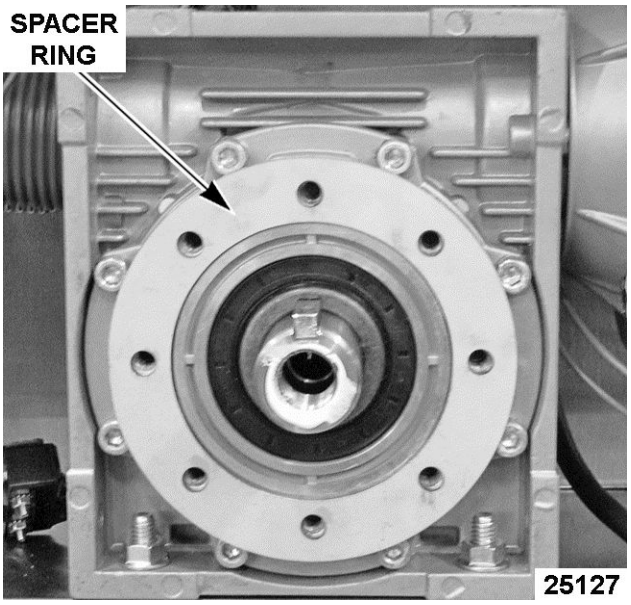

Fig. 32

11. Remove bolts (4) securing gear reducer and control box to kettle frame.

NOTE: A one piece nut plate assembly may be installed at the rear of gear reducer in place of individual mounting nuts to ease assembly.

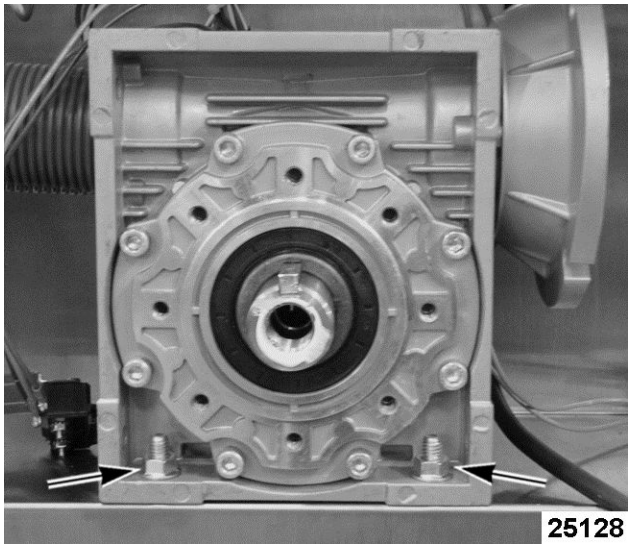

Fig. 33

12. Pull gear reducer away from kettle by working it off the kettle pivot shaft until free. Retain key for use on replacement gear reducer.

NOTE: Control box can be moved as necessary for ease of gear reducer removal.

13. Remove reducer shaft extension from gear reducer shaft (2 roll pins). Retain for use on replacement gear reducer.

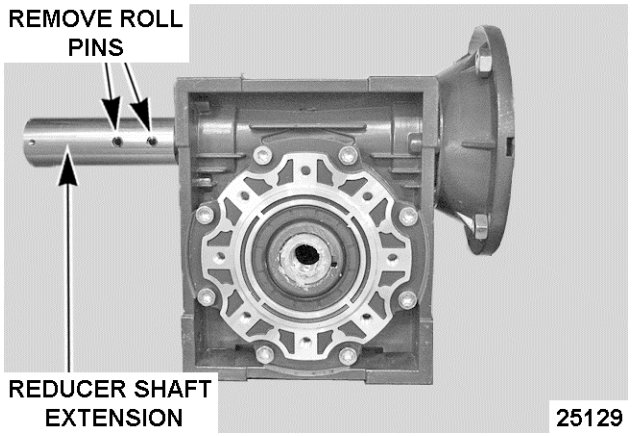

Fig. 34

14. Reverse procedure to install replacement gear reducer.

15. Perform TILT SWITCH (2S) ADJUSTMENT - POWER TILTING OPTION ONLY and DOWN LIMIT SWITCH (3S) ADJUSTMENT - POWER TILTING OPTION ONLY.

SERVICE PROCEDURES AND ADJUSTMENTS

⚠ WARNING

Certain procedures in this section require electrical test or measurements while power is applied to the machine. Exercise extreme caution at all times. If test points are not easily accessible, disconnect power and follow lockout / tagout procedures, attach test equipment and reapply power to the test.

TEMPERATURE CONTROLLER TEST

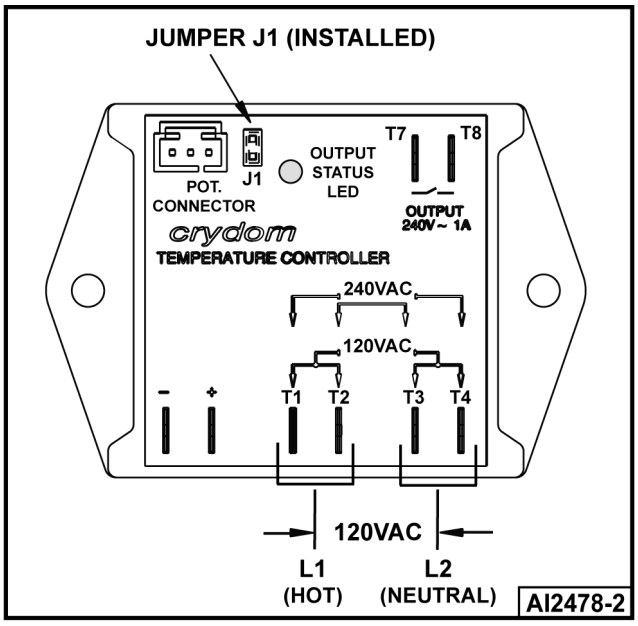

Fig. 35

1. Place kettle in full upright position (tilting models only).
2. Set temperature dial to lowest setting. Kettle must be below 110°F before verifying the potentiometer output to the controller is good over the full range of temperature dial travel.
3. Access the temperature controller as outlined in ELECTRICAL PANEL COMPONENTS.
4. Check all lead wires for secure connections to the controller terminals. Wiring harness lead wires must be connected to T1-T2 and T3-T4 for proper input to controller.
5. Re-connect power to the machine.
6. Turn power switch on.
7. Verify temperature controller is receiving 120VAC at terminals T1-T3 and T2-T4 and machine is properly grounded.
8. Slowly turn temperature dial to the highest setting and monitor heat light over the full range of travel.
   A. Verify heat light (amber) comes on, blower motor comes on and transformer is powered (120VAC).
   B. If the components listed above are functioning properly, then output from T8 on controller should be present. As long as transformer output voltage is correct (24VAC), heat circuit is powered and the ignition sequence to light the burner will start.
   C. If heat light does not remain on or flashes momentarily as temperature setting is slowly increased, verify condition of potentiometer as outlined under POTENTIOMETER TEST.
   D. If heat light or blower motor is not coming on; or transformer is not powered.
      1) Verify condition of thermocouple as outlined under THERMOCOUPLE TEST.

NOTE: Temperature controller will de-energize internal relay and turn off the output status LED if the circuitry detects an open thermocouple. LED will begin to flash 3 times, pause, then repeat the flash sequence to indicate the open thermocouple condition.

      2) Check lead wire connections at the component that is not functioning (heat light, blower motor or transformer).
      3) Verify power at the component that is not functioning. If power is present, determine if the component is malfunctioning. If power is not present at any of the components, continue with procedure.

9. Disconnect lead wire from terminal T7 on the controller.

A. Verify 120VAC between lead wire from T7 and ground. If correct, re-connect lead wire to terminal T7 and continue with procedure.

B. If incorrect, check pressure switch (1PS) and water level controller (WLC LLCO).

10. Disconnect lead wire from terminal T8 on the controller.

A. Verify 120VAC between T8 and ground. If correct, output from controller is functioning properly.

B. If incorrect, install a replacement temperature controller and check for proper operation.

POTENTIOMETER TEST

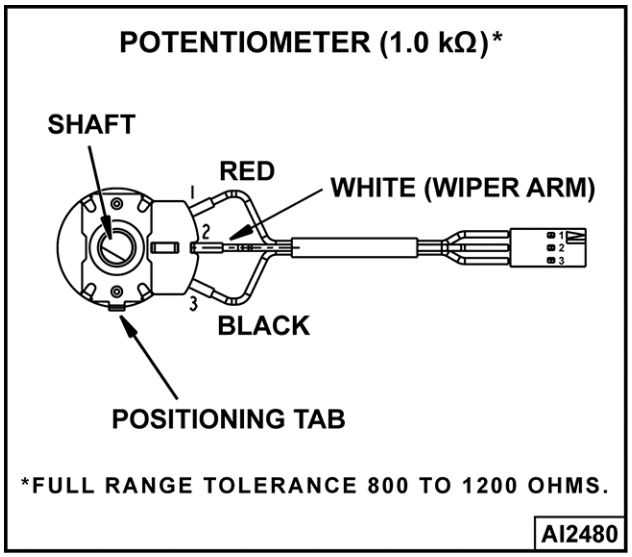

Fig. 36

1. Access control panel potentiometer by removing CORNER PANEL (TILTING) or SIDE PANEL (STATIONARY).
2. Turn potentiometer shaft fully counterclockwise to the lowest setting.
3. Set VOM to measure resistance.
4. Connect meter leads to the white and black lead wires on potentiometer terminals.

A. Resistance should measure approximately zero ohms.

5. Slowly turn potentiometer shaft clockwise over the full range of travel and monitor resistance change on the meter.

A. Resistance should measure 800 to 1200 ohms with shaft turned fully clockwise.

B. If the resistance value increased smoothly without sudden drops or spikes and the full travel resistance value is within tolerance then potentiometer is functioning properly.

C. If the resistance value did not increase smoothly but had drops or spikes over the full travel range then potentiometer is not functioning properly. Install a replacement potentiometer and check for proper operation.

THERMOCOUPLE TEST

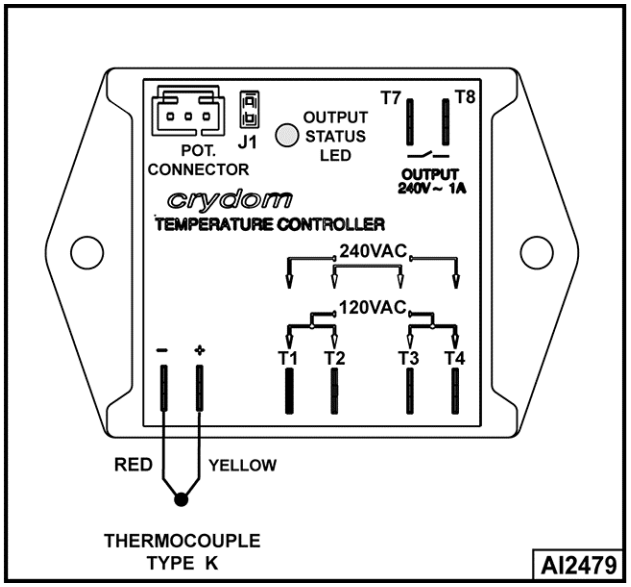

Fig. 37



⚠ WARNING

Disconnect the electrical power to the machine and follow lockout / tagout procedures.

1. Access temperature controller as outlined in ELECTRICAL PANEL COMPONENTS.
2. Remove thermocouple lead wires from temperature controller.
3. Check the thermocouple for a measurable resistance (approximately 5 to 10 ohms at room temperature). If meter reads an overload (OL) condition (open), or zero ohms (short) replace the thermocouple and check temperature controller for proper operation.

TYPE K THERMOCOUPLE PROBE AND MILLIVOLT CHART	
TEMPERATURE	**MILLIVOLT**
100° F	1.521

TYPE K THERMOCOUPLE PROBE AND MILLIVOLT CHART	
TEMPERATURE	**MILLIVOLT**
150° F	2.667
200° F	3.820
250° F	4.925
300° F	6.094
350° F	7.207
400° F	8.316

VENTING

NOTE: This procedure outlines venting the reservoir jacket to remove air for proper heat transfer to kettle contents.

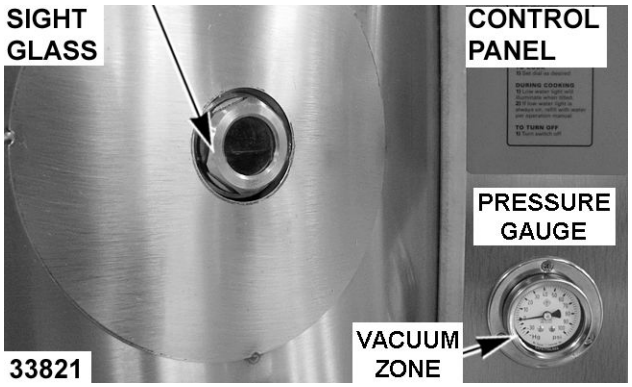

Fig. 38

1. With kettle at room temperature, verify pressure gauge is in vacuum zone and reading 25 to 30 in. Hg.

NOTICE

If vacuum is below minimum listed, air must be removed from reservoir jacket. Continue with procedure to vent as necessary.

2. Place kettle in full upright position (tilting models only).
3. Verify water level.

NOTICE

If Low water light is lit on control panel, add distilled water. Refer to FILLING THE RESERVOIR JACKET.

4. Turn power switch on.
5. Set temperature dial to highest setting. Allow kettle to heat until the jacket pressure reaches 10 PSI.

⚠ WARNING

Pressure Relief Valve Exhaust. DO NOT connect to building water, gas, or steam supply. DO NOT block or restrict.

⚠ WARNING

Hot steam. The kettle and its parts are hot. Use care when operating, cleaning or servicing the kettle.

6. Open pressure relief valve for approximately 10 seconds. Allow valve to snap shut to seal.

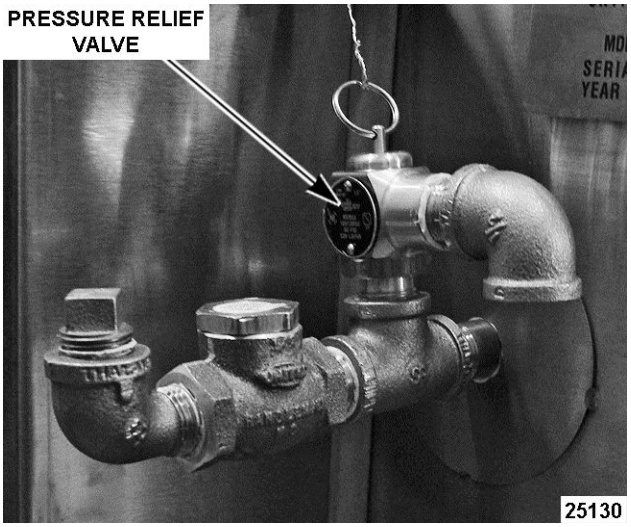

Current Construction

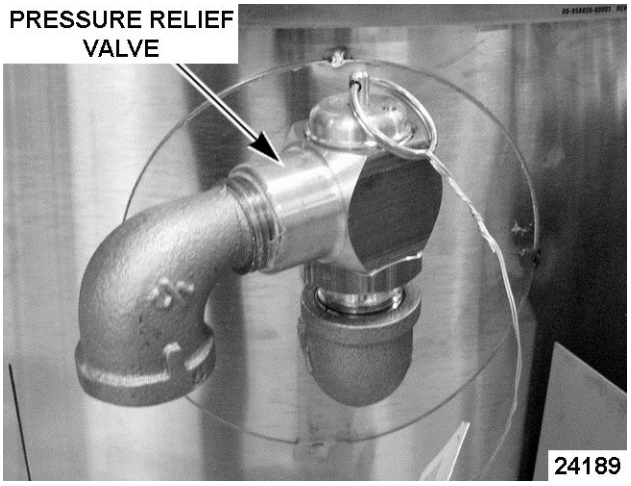

Previous Construction

7. Turn power switch off and allow kettle to cool (room temperature).

   Verify pressure gauge reading is within correct vacuum range.

   A. If reading is below minimum listed or will not maintain proper vacuum, check all threaded fittings extending from the kettle couplings for leaks and tightness.

1) Check pressure relief valve for leaks from poor valve seating or built up debris. Manually operate valve several times to reseat. Allow valve to snap shut to seal. Repeat venting procedure.

2) If pressure relief valve is malfunctioning, install a replacement and check for proper operation.

FILLING THE RESERVOIR JACKET

NOTE: The reservoir water level must be maintained high enough to keep contact with the water level probe (LLCO). If low water light comes on during use, the visible level may be below the water level probe and must be replenished before heating can continue. The low water light will come on when kettle is tilted (tilting models only).

NOTICE

When filling reservoir jacket, use only distilled water and heat transfer fluid. The ratio is 67% distilled water and the 33% heat transfer fluid.

NOTE: Jacket fill port plumbing: A pipe elbow and pipe plug are installed on current construction kettles to open the fill port. A manual valve with knob was installed on previous construction kettles to open the fill port.

Partial Refill

1. Place kettle in full upright position (tilting models only).
2. Turn power switch on.

NOTICE

If Low water light is lit on control panel, continue with procedure to refill.

3. Set temperature dial to lowest setting.

⚠ WARNING

Pressure Relief Valve Exhaust. DO NOT connect to building water, gas, or steam supply. DO NOT block or restrict.

⚠ WARNING

Hot steam. The kettle and its parts are hot. Use care when operating, cleaning or servicing the kettle.

4. Open pressure relief valve until reservoir jacket is completely vented. Allow valve to snap shut to seal.
5. If installed, open the manual valve on the fill port for the reservoir jacket at back of kettle.
   A. Remove pipe plug from the valve/pipe elbow to open the fill port.
   B. Insert funnel into the fill port and slowly add water until the level in the sight glass is 1/3 full. Low water light should be off (LLCO probe is satisfied). As necessary, vent the air from the jacket as outlined below:
      1) If pressure relief valve is installed at a separate location from the fill port (two different openings in the jacket), open the pressure relief valve to provide a vent for the jacket air to escape and aid in filling. Allow valve to snap shut to seal.
      2) If pressure relief valve and fill port are installed on the same plumbing assembly (single opening to the jacket), access the Pressure Switch (1PS), remove the compression nut from fitting near the tee and pull the tubing from the fitting.
   C. Turn power switch off.
6. Close manual valve (if installed) to prevent leaks. Hand tighten only.
7. Clean pipe plug threads and apply thread sealant. Install pipe plug into valve/pipe elbow opening to close the fill port. Tighten to prevent leaks.
8. Turn power switch on and verify low water light is not lit.
   A. If low water light is lit, see Possible Causes for Low Water Light Lit in TROUBLESHOOTING.
   B. If low water light problem is still not resolved see Possible Causes for Kettle Does Not Heat in TROUBLESHOOTING.
9. Remove air from reservoir jacket as outlined under VENTING.
10. Check kettle for proper operation.

Complete Draining and Refill



⚠ WARNING

Disconnect the electrical power to the machine and follow lockout / tagout procedures.

⚠ WARNING

Pressure Relief Valve Exhaust. DO NOT connect to building water, gas, or steam supply. DO NOT block or restrict.

⚠ WARNING

Hot steam. The kettle and its parts are hot. Use care when operating, cleaning or servicing the kettle.

NOTE: Appearance of fluid will no longer be clear after usage in kettle.

1. Set temperature dial to lowest setting.
2. Open pressure relief valve until reservoir jacket is completely vented. Allow valve to snap shut to seal.
3. Remove pressure relief valve from kettle to vent the jacket and facilitate draining. Retain for reuse.
4. Remove draw-off valve or plug valve from kettle (stationary models only).
5. Place container under kettle to catch fluid and position it below the sight glass.
6. Remove sight glass using 36mm socket.
   A. Stationary Models - It is recommended to use a drill pump to drain.
   B. Tilting Models - Turn crank handle clockwise to tilt the kettle forward.
7. After draining is complete, place kettle in full upright position.
   A. Install sight glass and tighten it to seal the internal O-ring to prevent leaks.
8. To Refill.
   A. With kettle in full upright position.
   B. If installed, open the manual valve on the fill port for the reservoir jacket at back of kettle.
   C. Remove pipe plug from valve/pipe elbow to open the fill port.
   D. Insert funnel into the fill port and slowly add mixture of water and heat transfer fluid to the reservoir jacket. Fill the jacket according to the volumes listed in the table below. The level in the sight glass should be 1/3 full.

RESERVOIR JACKET VOLUME			
Model	**Total Fluid Volume (GAL)**	**Water (GAL)**	**Heat Transfer Fluid (GAL)**
K20GL, K20GLT	7.0	4.0	2.75
K40GL, K40GLT	6.0	3.75	2.25
K60GL, K60GLT	9.25	6.00	3.25

9. Close manual valve (if installed) to prevent leaks. Hand tighten only.
10. Clean pipe plug threads and apply thread sealant. Install pipe plug into valve/pipe elbow opening to close the fill port. Tighten to prevent leaks.
11. Install pressure relief valve to kettle.
12. Install draw-off valve or plug valve to kettle (stationary models only).
13. Re-connect power.
14. Turn power switch on and verify low water light is not lit.
    A. If low water light is lit, see Possible Causes for Low Water Light Lit in TROUBLESHOOTING.
    B. If low water light problem is still not resolved see Possible Causes for Kettle Does Not Heat in TROUBLESHOOTING.
15. Remove air from reservoir jacket as outlined under VENTING.
16. Check kettle for proper operation and leaks.

BLOWER INLET PRESSURE CHECK ENDING AT SN 46-3028411

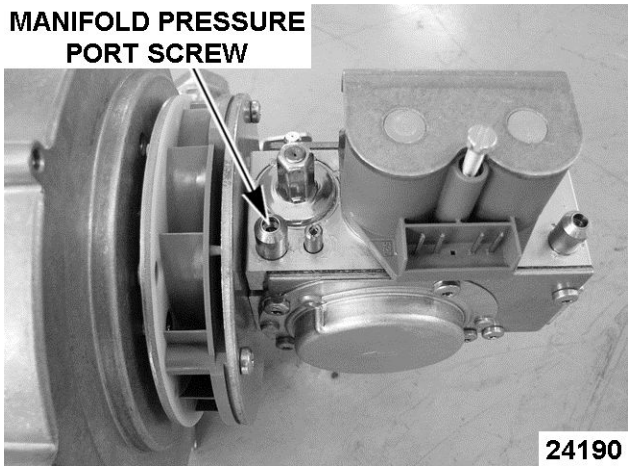

Fig. 41

1. Remove CORNER & REAR PANELS (TILTING) or SIDE & REAR PANELS (STATIONARY) to access blower & gas valve.
2. Remove electrical connector from gas valve.
3. Open manifold pressure port. Turn screw 1 to 2 turns CCW.
4. Attach U inclined manometer hose to manifold pressure port.
5. Turn Kettle on.
6. Measure blower vacuum pressure.
   A. Blower low speed (during trial for ignition, 7 sec) - Vacuum pressure reading should be 0.27" W.C. to 0.30" W.C.
   B. Blower high speed (15 sec. time delay) - Vacuum pressure should be 1.91" W.C. to 1.98" W.C.
   C. If vacuum pressure reading is outside of the values stated above, check blower air inlet for debris buildup/obstructions. If found, turn power switch off. Remove debris and retest.
   D. If vacuum pressure results are the same after retest, replace blower. Perform GAS VALVE/BLOWER INLET PRESSURE CHECK (108W).

BLOWER INLET PRESSURE CHECK 2ND GENERATION STARTING AT SN 46-3028412

1. Turn gas supply off.
2. Remove CORNER & REAR PANELS (TILTING) or SIDE & REAR PANELS (STATIONARY) to access blower and gas valve.
3. Attach U inclined manometer hose to test port (1, Fig. 42).

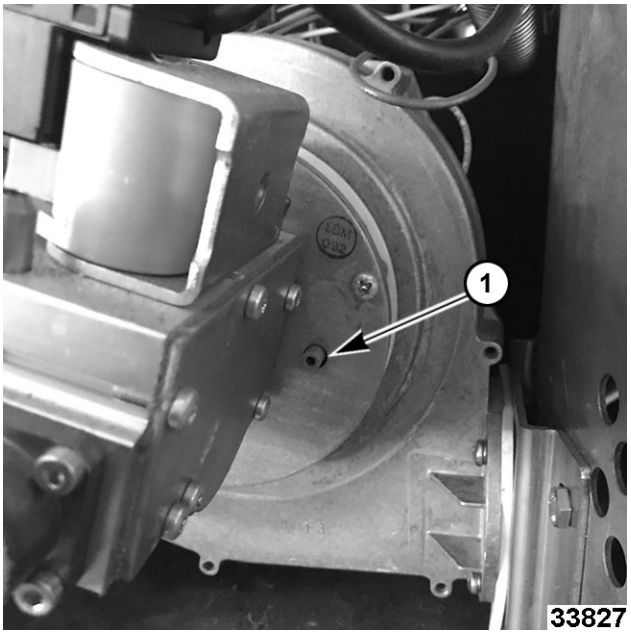

Fig. 42

4. Turn gas supply on.
5. Turn Kettle on.
6. Set-up burner with combustion analyzer.
   A. Verify or set speed control board settings.
      - Low Fire is set to 8. Air pressure -0.06.
      - High Fire is set to C-. Air pressure -0.19.

NOTE: Step 2 for setting of a new valve or if starting with a raw adjustment.

   B. Turn adjustment screw on the gas valve counterclockwise 10 turns for propane or 15 turns for natural gas.
   C. Turn temperature control to BOIL and turn on power switch to initiate ignition series.
   D. After 10 minute warmup, begin sampling flue gas with a calibrated analyzer. (natural gas / propane).
      - Verify CO2 reading is 10% - 12% (natural gas / propane).
      - Verify combustion analyzer reports CO air free of less than 50 ppm. If not, turn adjustment screw counterclockwise to lower CO.

7. Measure blower vacuum pressure.
   A. Blower low speed (during trial for ignition, 7 sec) - Vacuum pressure reading should be 0.06" W.C.
   B. Blower high speed (15 sec. time delay) - Vacuum pressure should be .19" W.C.
   C. If vacuum pressure reading is outside of the values stated above, check blower air inlet for debris buildup/obstructions. If found, turn power switch off. Remove debris and retest.
   D. If vacuum pressure results are the same after retest, replace blower. Perform GAS VALVE/BLOWER INLET PRESSURE CHECK FOR 2ND GENERATION STARTING AT SN 46-3028412.
8. Turn gas supply off.
9. Reverse procedure to install access panels.
10. Turn gas supply on.

GAS VALVE/BLOWER INLET PRESSURE CHECK (108W)



⚠ WARNING

Shut off the gas before servicing the unit and follow lockout / tagout procedures.

NOTE: Wattage is listed on blower label.

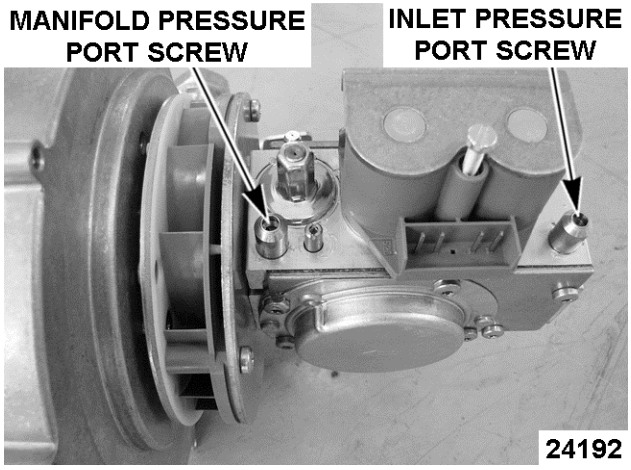

Fig. 43

1. Remove CORNER & REAR PANELS (TILTING) or SIDE & REAR PANELS (STATIONARY) to access blower & gas valve.
2. Open **inlet** pressure port. Turn screw 1 to 2 turns CCW.
3. Attach slack tube manometer hose to inlet pressure port.
4. Attach U inclined manometer hose to manifold pressure port.
5. Turn kettle on.
6. Measure blower vacuum pressure.
   A. Blower low speed (during trial for ignition, 7 sec.) - Vacuum pressure reading should be 0.27" W.C. to 0.30" W.C.
   B. Blower high speed (15 sec. time delay) - Vacuum pressure should be 1.91" W.C. to 1.98" W.C.
   C. If vacuum pressure reading is outside of the values stated above, check blower air inlet for debris buildup / obstructions. If found, turn power switch off. Remove debris and retest.
7. Reconnect power and turn gas supply on.

NOTE: If static line pressure exceeds 14" W.C. (½ psig) the customer must supply and install a line pressure regulator to reduce the pressure below the maximum allowable for the valve.

8. Turn Kettle on.
9. Verify inlet pressure is 5-7" W.C. (natural) and 11-13" W.C. (propane). Refer to: Fig. 45.

NOTICE

If inlet pressure is excessive, contact the local gas supply company to adjust incoming line pressure.

10. Verify combustion blower motor speed, control board settings.
    - High Fire = F (1, Fig. 44)
    - Low Fire = 9 (2, Fig. 44)

NOTE: The head of the arrow cut out in the center will designate the rotary switch setting.

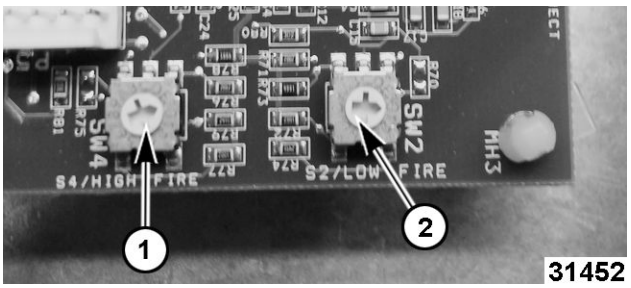

Fig. 44

To Adjust:

1. Turn S2 gas pressure (Fig. 45) fine adjustment screw 1/4 turn (CW to increase; CCW to decrease).
2. Turn power switch off then back on and check pressure readings. Repeat adjustment as required.
   A. If unable to achieve correct pressure, then replace GAS VALVE. Preset S2 - gas pressure fine adjustment screw on the replacement valve. Turn screw fully *clockwise* until it stops.

      Natural - Turn screw 15 turns *counterclockwise.*

      Propane - Turn screw 9 turns *counterclockwise.*

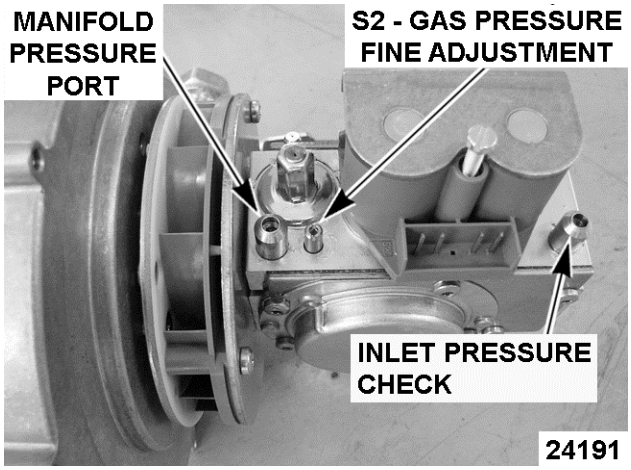

Fig. 45

GAS VALVE/BLOWER INLET PRESSURE CHECK (130W)



⚠ WARNING

Shut off the gas before servicing the unit and follow lockout / tagout procedures.

NOTE: This check is for K series gas kettle models, K20GL, K20GLT, K40GL, K40GLT, K60GL, K60GLT with serial number 463023802 to present and built on 5/10/17 or after.

1. Remove CORNER & REAR PANELS (TILTING) or SIDE & REAR PANELS (STATIONARY) to access blower & gas valve.
2. Open inlet pressure port. Turn screw 1 to 2 turns CCW.
3. Attach slack tube manometer hose to inlet pressure port.
4. Attach U inclined manometer hose to manifold pressure port.
5. Turn kettle on.
6. Measure blower vacuum pressure.
   A. Blower low speed (during trial for ignition, 7 sec.) - Vacuum pressure reading should be 0.27" W.C. to 0.30" W.C.
   B. Blower high speed (15 sec. time delay) - Vacuum pressure should be 1.91" W. C. to 1.98" W.C.
7. Verify incoming gas line to kettle is a ¾" ID commercial gas line.
8. Verify incoming gas supply line pressure is 7“ Water Column (natural gas) and 11” Water Column (propane).

NOTICE

If inlet pressure is excessive, contact the local gas supply company to adjust incoming line pressure.

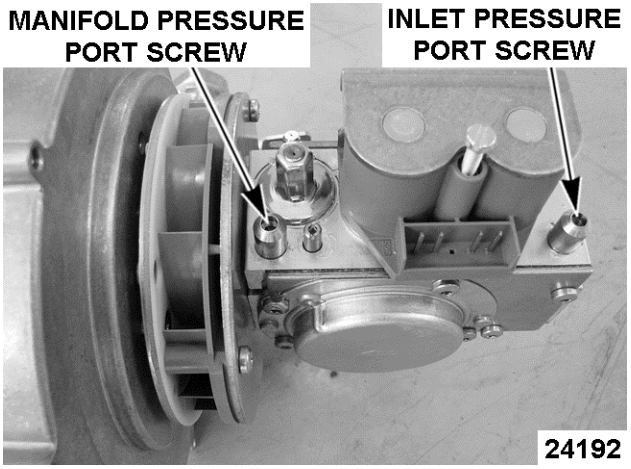

Fig. 46

9. Verify combustion blower motor speed, control board settings.

NOTE: The head of the arrow cut out in the center will designate the rotary switch setting. "F" and "8" are designations on the potentiometer.

- High Fire = F (1, Fig. 47)
- Low Fire = 8 (2, Fig. 47)

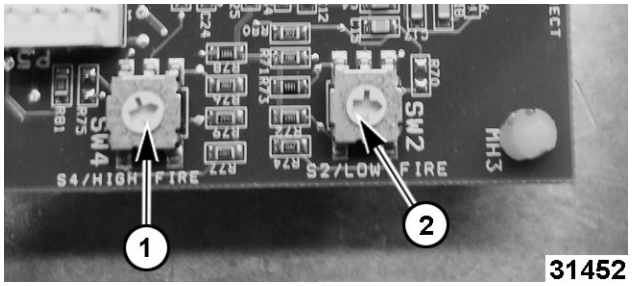

Fig. 47

10. Turn fine adjustment screw on gas valve clockwise all the way in. (Fig. 48)
11. Adjust gas valve fine adjustment screw for type of gas. (Fig. 48)
    A. If unable to achieve correct pressure, then replace GAS VALVE. Preset S2 - gas pressure fine adjustment screw on the replacement valve. Turn screw fully clockwise until it stops.
    - **Propane:** Turn fine adjustment screw on gas valve counterclockwise 9 turns.
    - **Natural Gas:** Turn fine adjustment screw on gas valve counterclockwise 15 turns.

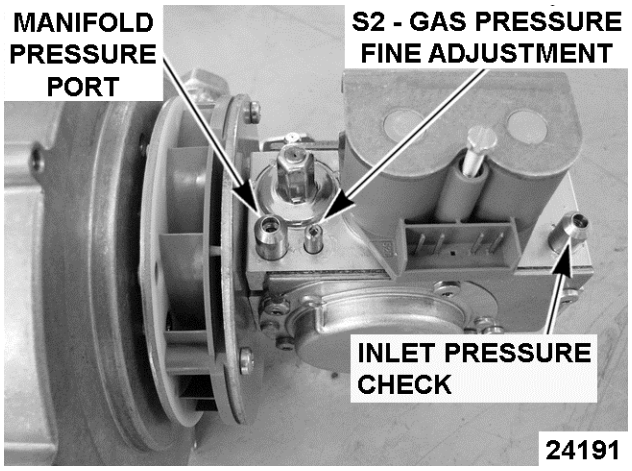

Fig. 48

12. Turn temperature control to **"BOIL"** and turn on power switch to initiate ignition series.
13. After a warmup of 10 minutes begin sampling flue gas with a calibrated analyzer.

NOTICE

Flue gasses must be checked with a combustion analyzer. Combustion limits are listed below. If the burner system fails to meet these requirements, please call Steam Technical Support immediately. Insert sampling probe into flue discharge, located towards the rear of kettle. Ensure the probe is inserted in such a way that the sample gas is not diluted. Place the probe 1-2 inches below the discharge.

14. Make further adjustments to fine adjustment screw if needed to obtain CO2 reading of 10.5% to 12.0% (Natural Gas) or 12.0% to 13.5% (propane).
15. Verify combustion analyzer reports CO air free of less than 400ppm (.04%). If not, turn fine adjustment screw CW to lower CO.

GAS VALVE/BLOWER INLET PRESSURE CHECK FOR 2ND GENERATION STARTING AT SN 46-3028412



⚠ WARNING

Shut off the gas before servicing the unit and follow lockout / tagout procedures.

NOTE: Wattage is listed on blower label.

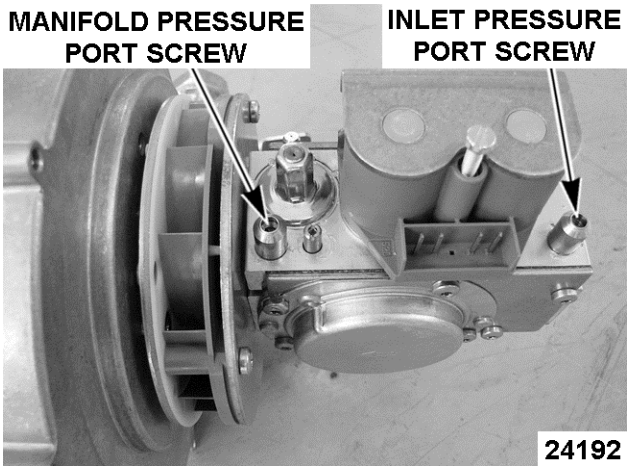

Fig. 49

1. Remove CORNER & REAR PANELS (TILTING) or SIDE & REAR PANELS (STATIONARY) to access blower & gas valve.
2. Open **inlet** pressure port. Turn screw 1 to 2 turns CCW.

3. Attach slack tube manometer hose to inlet pressure port.
4. Attach U inclined manometer hose to manifold pressure port.
5. Turn kettle on.
6. Measure blower vacuum pressure.
   A. Blower low speed (during trial for ignition, 7 sec.) - Vacuum pressure reading should be 0.27" W.C. to 0.30" W.C.
   B. Blower high speed (15 sec. time delay) - Vacuum pressure should be 1.91" W.C. to 1.98" W.C.
   C. If vacuum pressure reading is outside of the values stated above, check blower air inlet for debris buildup / obstructions. If found, turn power switch off. Remove debris and retest.
7. Reconnect power and turn gas supply on.

NOTE: If static line pressure exceeds 14" W.C. (½ psig) the customer must supply and install a line pressure regulator to reduce the pressure below the maximum allowable for the valve.

8. Turn Kettle on.
9. Verify inlet pressure is 5-7" W.C. (natural) and 11-13" W.C. (propane).

NOTICE

If inlet pressure is excessive, contact the local gas supply company to adjust incoming line pressure.

10. Verify combustion blower motor speed, control board settings.
    - High Fire = C (1, Fig. 50)
    - Low Fire = 8 (2, Fig. 50)

NOTE: The head of the arrow cut out in the center will designate the rotary switch setting.

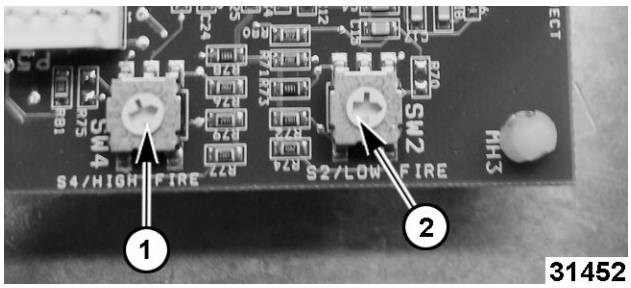

Fig. 50

To Adjust:

1. Turn S2 gas pressure fine adjustment screw 1/4 turn (CW to increase; CCW to decrease).
2. Turn power switch off then back on and check pressure readings. Repeat adjustment as required.
   A. If unable to achieve correct pressure, then replace GAS VALVE. Preset S2 - gas pressure fine adjustment screw on the replacement valve. Turn screw fully *clockwise* until it stops.

      Natural - Turn screw 15 turns *counterclockwise.*

      Propane - Turn screw 9 turns *counterclockwise.*

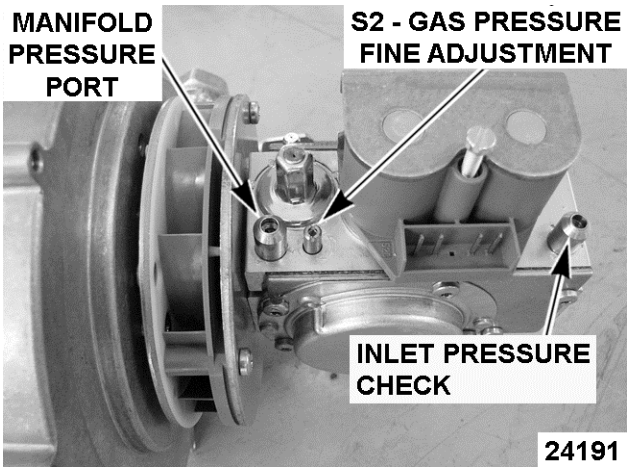

Fig. 51

SPARK IGNITION TEST

If the ignition control module is not generating a spark or the spark is not sufficient to light kettle burner, perform the following test.

1ST GENERATION IGNITION MODULE SHOWN IN Fig. 52

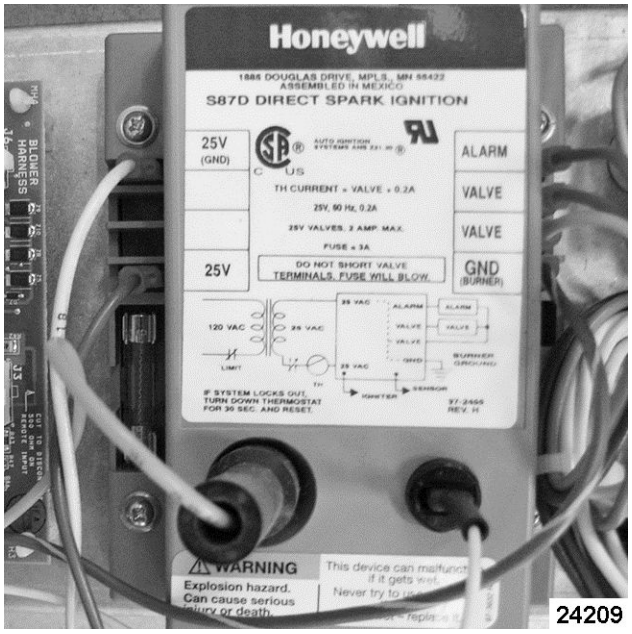

Fig. 52

2ND GENERATION IGNITION MODULE SHOWN IN Fig. 53

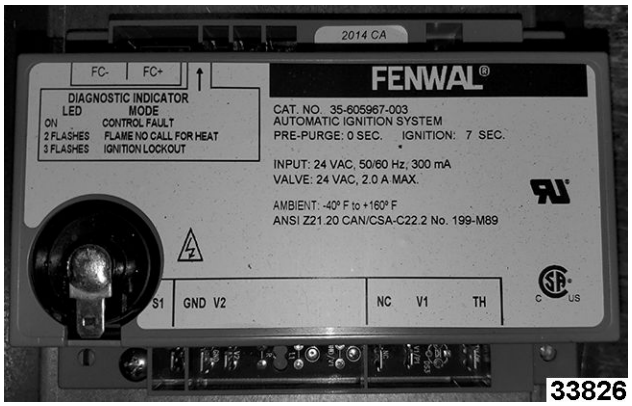

Fig. 53

1. Access ignition control module in KETTLE CONTROL AREA.
2. Turn the on/off switch on and set the temperature dial to call for heat. Tilting models must be in the full upright position.
3. Verify the ignition control module is receiving 24VAC between terminals 25V & 25V GND.
   A. If voltage is present, turn the on/off switch off and proceed to step 4.
   B. If voltage is not present, see schematic diagram.
4. Disconnect power to the machine.
5. Verify all electrical connections (including ground) on the ignition control module are secure.
6. Access SPARK IGNITOR.
7. Verify the ground connection on spark ignitor is clean and secure. The ground connection should have good metal to metal contact.
8. Remove spark ignitor and check the following:
   A. Inspect the ceramic insulator on spark ignitor electrode for cracks or evidence of exposure to extreme heat, which can permit leakage to ground. If either of these conditions exists, then install a replacement spark ignitor.
   B. Inspect the spark ignitor electrode and ground rod for contaminates, or corrosion. Clean those surfaces as necessary.
   C. Spark gap between the spark ignitor electrode and ground rod should be approximately 1/8". If the gap is outside of this dimension, bend the spark ignitor electrode as necessary, to make the adjustment.

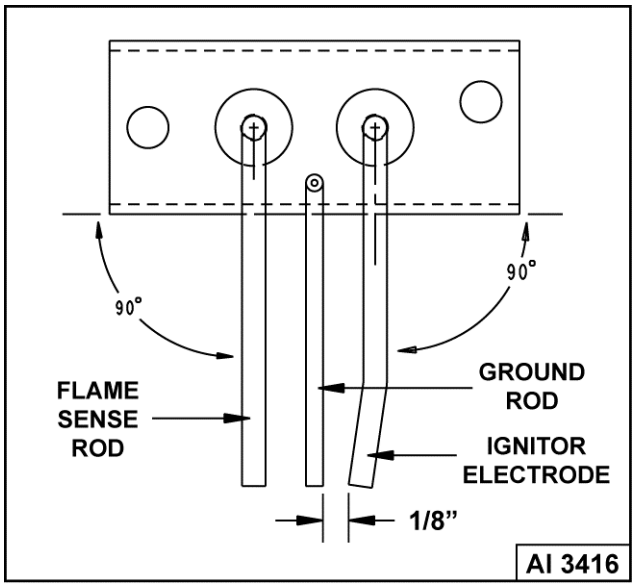

Fig. 54

   D. Check the ignitor wire connection for tightness and damaged insulation. If the ignitor wire appears to be damaged, then install a replacement ignitor wire.
9. Install spark ignitor and reconnect ignitor wire.

FLAME SENSE CURRENT TEST

NOTE: You must complete the SPARK IGNITION TEST prior to checking flame sense current.

If kettle burner lights but will not maintain flame, perform the following test.

1. Turn the on/off switch off.
2. Access ignition control module in KETTLE CONTROL AREA.

1ST GENERATION IGNITION MODULE SHOWN IN Fig. 55

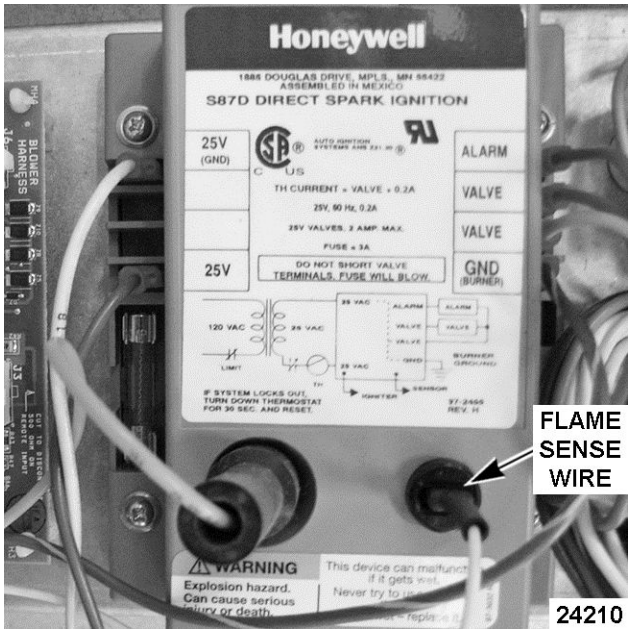

Fig. 55

2ND GENERATION IGNITION MODULE SHOWN IN Fig. 56

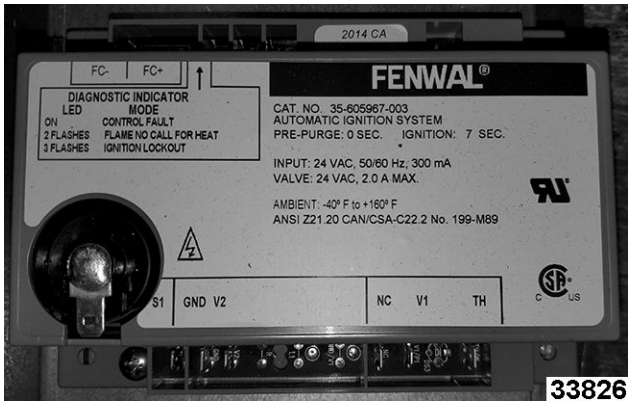

Fig. 56

3. Set VOM to micro amps scale (DC). Remove flame sense wire from ignition module and connect it to the black meter lead (-) and connect red meter lead (+) to flame sense terminal.
4. Turn on/off switch on and set the temperature dial to call for heat.
5. With kettle burner lit, meter reading should be above 1.5 micro amps (minimum) and steady.
   A. If reading is greater than or equal to 1.5 micro amps then flame sense current is within tolerance. Turn on/off switch off and reconnect flame sense wire.
   B. If reading is less than 1.5 micro amps and the condition of the spark ignitor and flame sense has been verified as good, turn on/off switch off. Install a replacement ignition control module and check for proper operation.

IGNITION CONTROL MODULE TEST

1ST GENERATION IGNITION MODULE SHOWN IN Fig. 57

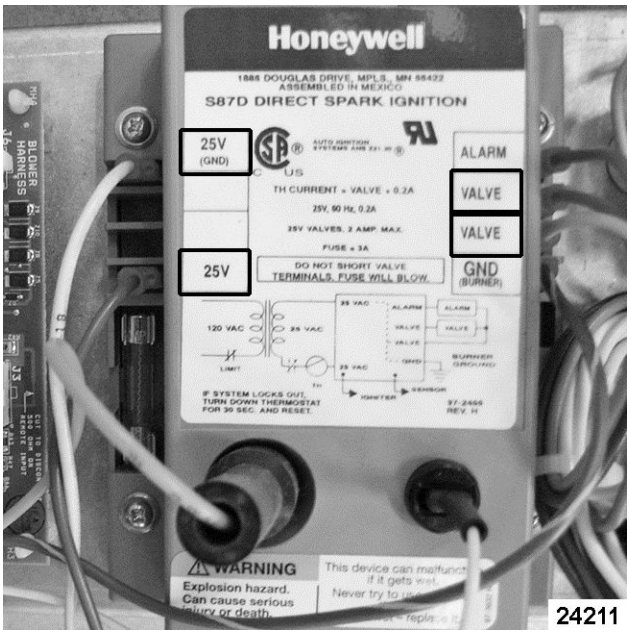

Fig. 57

2ND GENERATION IGNITION MODULE SHOWN IN Fig. 58

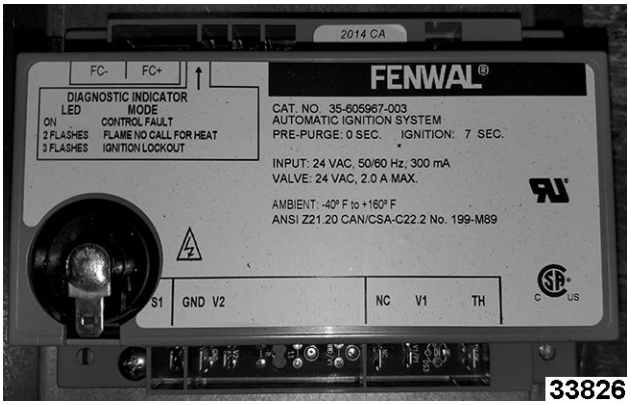

Fig. 58

1. Access ignition control module in KETTLE CONTROL AREA.
2. Turn the on/off switch on and set the temperature dial to call for heat.
   A. Power (1LT) light and heat light (3LT) come ON.
3. Ignition control module is energized and trial for ignition starts (6 seconds).
   A. Verify 24VAC between terminals 25V & 25V GND. If voltage is not present, check transformer (1T) output voltage.
4. Spark voltage is sent from spark terminal to the spark ignitor electrode and sparking begins. At the same time, the ignition module contacts close to energize gas valve coils, allowing gas flow to the burner. The kettle burner will light, burner flame is sensed and spark voltage from spark terminal is removed (sparking stops).
   A. Verify 24VAC between terminals valve and valve. If voltage is not present, replace ignition control module and check for proper operation.
5. As long as the temperature controller is calling for heat and the ignition control module is sensing a sufficient flame sense current, the valve contacts will remain closed.

NOTE: If kettle burner does not immediately light, the ignition control module continues sparking for 6 seconds, then locks out power to the gas valve (main valve remains closed). The ignition fail light comes ON. The module remains locked out until the on/off switch is cycled to reset the system and re-start the ignition trial cycle.

TILT SWITCH (2S) ADJUSTMENT - MANUAL TILTING MODELS

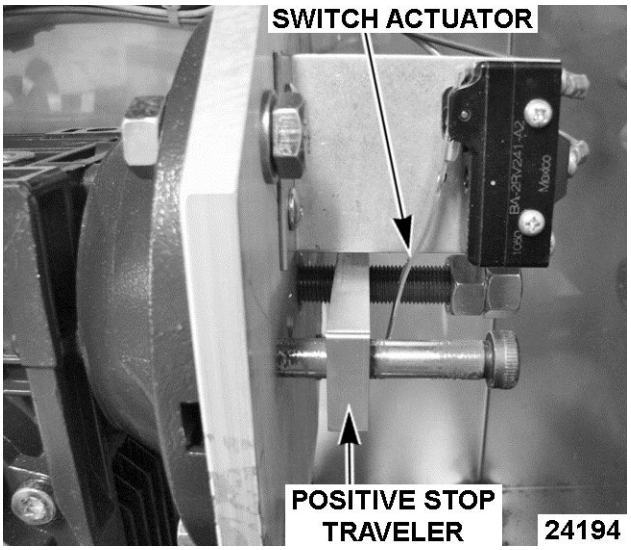

Fig. 59

1. Remove CONTROL BOX COVER (TILTING) to access Tilt Switch (2S).
2. Kettle tilt operation - The switch actuator should be operated by the positive stop traveler when the kettle is fully upright.
3. If adjustment is necessary, bend the switch actuator to obtain the proper tilt switch operation.
   A. Kettle fully upright - Tilt switch should be operated (N.O. held closed).
   B. Kettle tilted approximately 10 degrees - Tilt switch should be un- operated (open).

KETTLE TILT ADJUSTMENT - MANUAL TILTING MODELS

NOTE: Perform this procedure whenever the kettle is not returning to a horizontal position when upright, or when kettle is not tilting past 90° to empty contents.

1. With kettle fully upright, the top of kettle should be horizontal when viewed from either side.
2. Turn crank handle clockwise to tilt the kettle until it stops. Kettle should be tilted past 90° to allow contents to drain.
3. If adjustment is necessary, continue with procedure.
4. Remove CONTROL BOX COVER (TILTING).
5. Return kettle to fully upright position.

A. The inner jam nut should be in solid contact with positive stop traveller.

B. To adjust upright position (horizontal):

1) Loosen outer jam nut 2 to 3 turns counterclockwise and turn the inner jam nut in the same direction and amount.

2) Turn crank handle to position the top of kettle horizontally.

3) Turn inner jam nut clockwise until it stops against the positive stop traveller. Tighten outer jam nut to secure the stop position.

C. Turn crank handle to verify operation. Repeat adjustment as necessary.

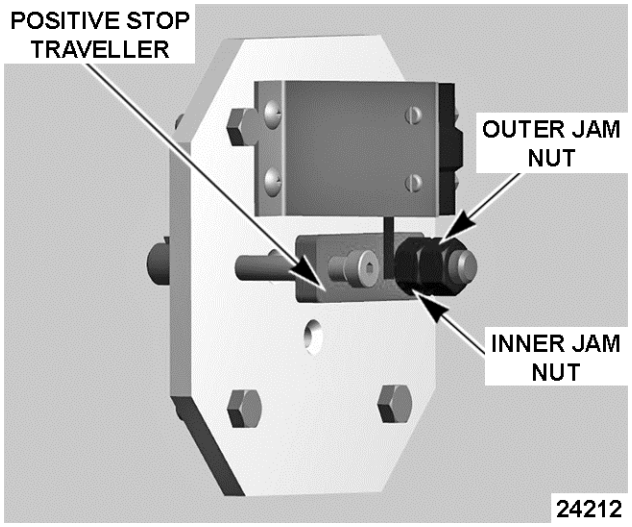

Kettle Fully Upright - Traveller Contacts Inner Jam Nut

6. Fully tilt the kettle until crank handle stops.

A. Verify positive stop traveller is in solid contact with stop plate.

B. To adjust fully tilted position:

1) Remove shoulder screw from stop plate.

2) Remove tilt switch bracket from stop plate.

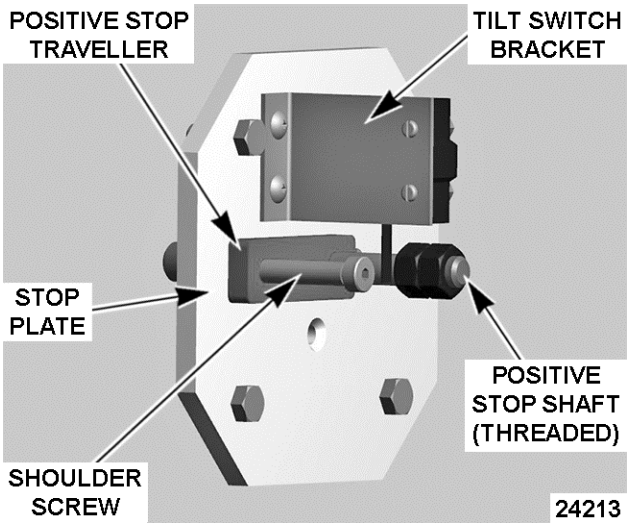

Kettle Fully Tilted - Traveller Contacts Stop Plate

3) Turn crank handle clockwise to tilt the kettle. The kettle should be tilted past 90° to empty its contents. The adjustment range is 92 to 95 degrees.

4) Turn positive stop traveller on the positive stop shaft (threaded) until it contacts the stop plate.

5) Adjust position of positive stop traveller as needed to align the shoulder screw mounting hole to the threaded hole in stop plate. Install shoulder screw.

6) Turn crank handle to verify operation. Repeat adjustment as necessary.

7) Install tilt switch bracket.

7. Install control panel cover.

TILT SWITCH (2S) ADJUSTMENT - POWER TILTING OPTION ONLY

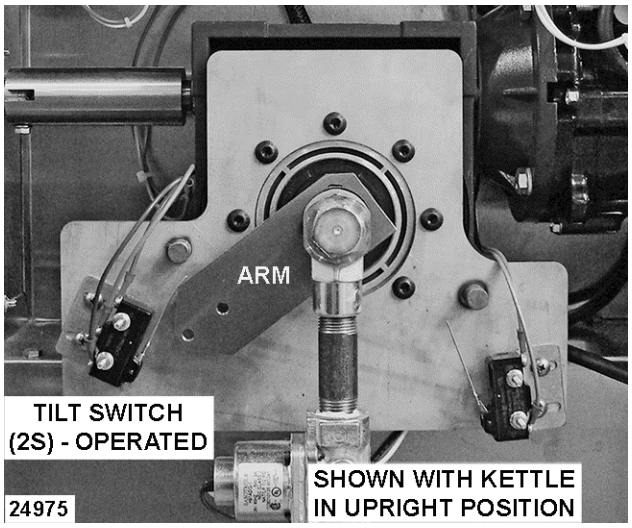

Fig. 62

1. Remove CONTROL BOX COVER (TILTING) to access Tilt Switch (2S).
2. Kettle tilt operation - The switch actuator should be operated by the arm when the kettle is fully upright to open the N.C. contacts and stop travel.
3. If adjustment is necessary, loosen the tilt switch mounting bracket screws (2) and position the switch to obtain the proper tilt switch operation. The mounting bracket holes are slotted to allow for adjustment.
   A. Kettle fully upright - Tilt switch should be operated (N.O. held closed).
   B. Kettle tilted approximately 10 degrees - Tilt switch should be un-operated to remove power from control circuit through the N.O. contacts. The N.C. contacts should be closed to energize K3 and allow kettle to be raised when tilt motor switch is operated.
4. Tighten switch mounting bracket screws and check for proper operation.

DOWN LIMIT SWITCH (3S) ADJUSTMENT - POWER TILTING OPTION ONLY

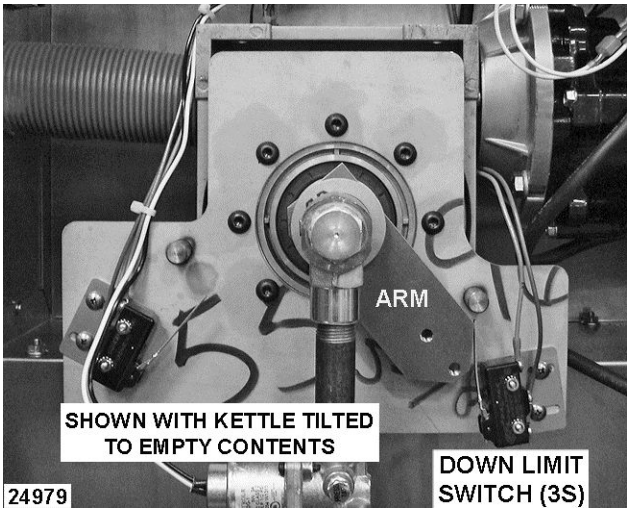

Fig. 63

1. Remove CONTROL BOX COVER (TILTING) to access Down Limit Switch (3S).
2. Kettle tilt operation - The switch actuator should be operated by the arm when the kettle is tilted past 90° to open the switch contacts and stop travel. The adjustment range is 92 to 95 degrees.
3. If adjustment is necessary, tilt kettle as described above and stop travel.
   A. Loosen the down limit switch mounting bracket screws (2) and position the switch to obtain the proper down limit switch operation. The mounting bracket holes are slotted to allow for adjustment.
4. Tighten switch mounting bracket screws and check for proper operation.

DC TILT MOTOR CONTROLLER TEST - POWER TILTING OPTION ONLY

1ST GENERATION CONTROLLER BOARD SHOWN IN Fig. 64

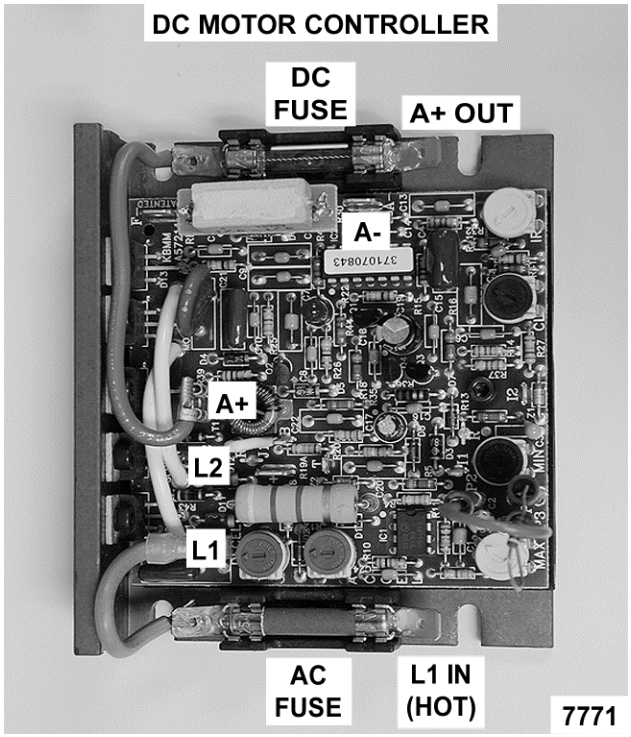

Fig. 64

2ND GENERATION CONTROLLER BOARD SHOWN IN Fig. 65

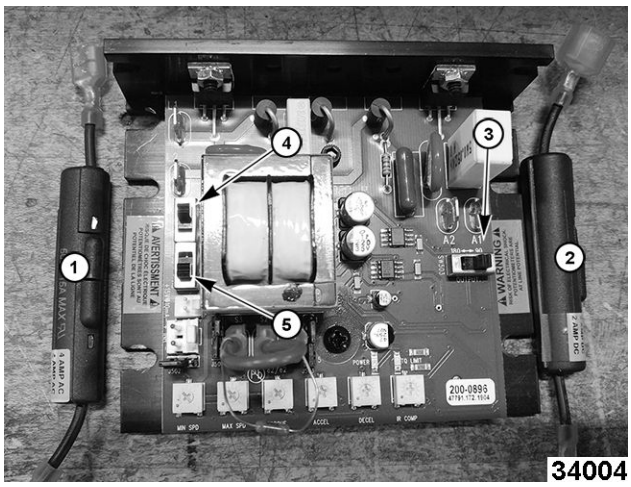

Fig. 65

- Fuse - 1,Fig. 65, 4 amp AC.
- Fuse - 2, Fig. 65, 2 amp DC.
- Switches
  - 4 and 5 switches shown in are both set at 115V.
  - 3 switch shown in Fig. 65 should be set at 90.

Trimpots 2nd Generation Controller Board in Fig. 66

- 1) MIN SPD set to 5 o'clock.
- 2) MAX SPD set to 5 o'clock.
- 3) TORQUE set to 5 o'clock.
- 4) ACCEL set to 12 o'clock.
- 5) DECEL set to 12 o'clock.
- 6) IR COMP set to 12 o'clock.

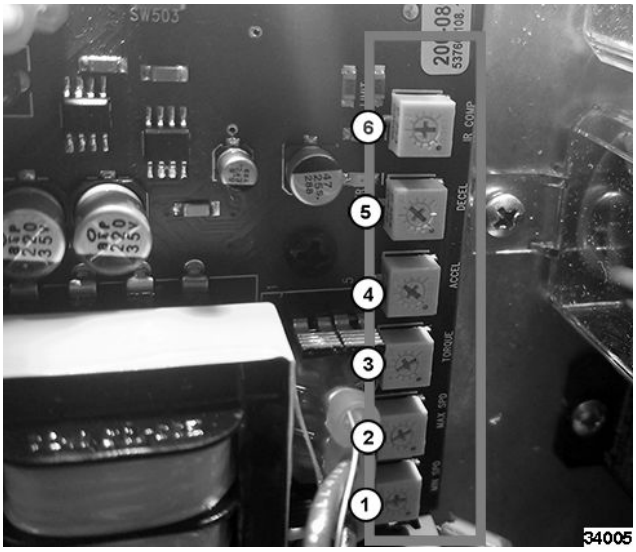

Fig. 66

1. Access DC tilt motor controller. Refer to: ELECTRICAL PANEL COMPONENTS - POWER TILTING OPTION ONLY.

   Set VOM to measure AC volts and connect meter leads at L1 & L2 on controller.
2. Turn power switch on.
3. Verify 120VAC at L1 & L2 on controller when the tilt motor switch (momentary) is operated to lower and raise kettle.
   A. If voltage is present but kettle does not raise & lower, proceed to Step 5.
   B. If voltage is not present refer to POWER TILTING OPTION ONLY.
4. Disconnect power to machine.
5. Set VOM to measure DC volts and connect VOM leads to terminals A + (positive) & A - (negative) on controller.
6. Re-connect power to the machine.
7. Verify 90VDC (approximate) from DC tilt motor controller when the tilt motor switch (momentary) is operated to raise & lower pan.
   A. If voltage is present but pan does not raise, refer to POWER TILTING OPTION ONLY.

B. If voltage is not present and DC fuse is ok, turn power switch off and disconnect power to machine.

8. Install a replacement DC tilt motor controller and check for proper operation.

SETTING RESISTOR ON CONTROLLER SPEED BOARD

Dial in Resistor

1. Turn all dial settings (white squares) on board all the way to the left.
2. Dial in all settings (Fig. 67).
   - 1) MIN SPD set to 12 o'clock.
   - 2) MAX SPD set to 11 o'clock.
   - 3) TORQUE set to 11 o'clock.
   - 4) ACCEL set to 1 o'clock.
   - 5) DECEL set to 1 o'clock.
   - 6) IR COMP set to 12 o'clock.

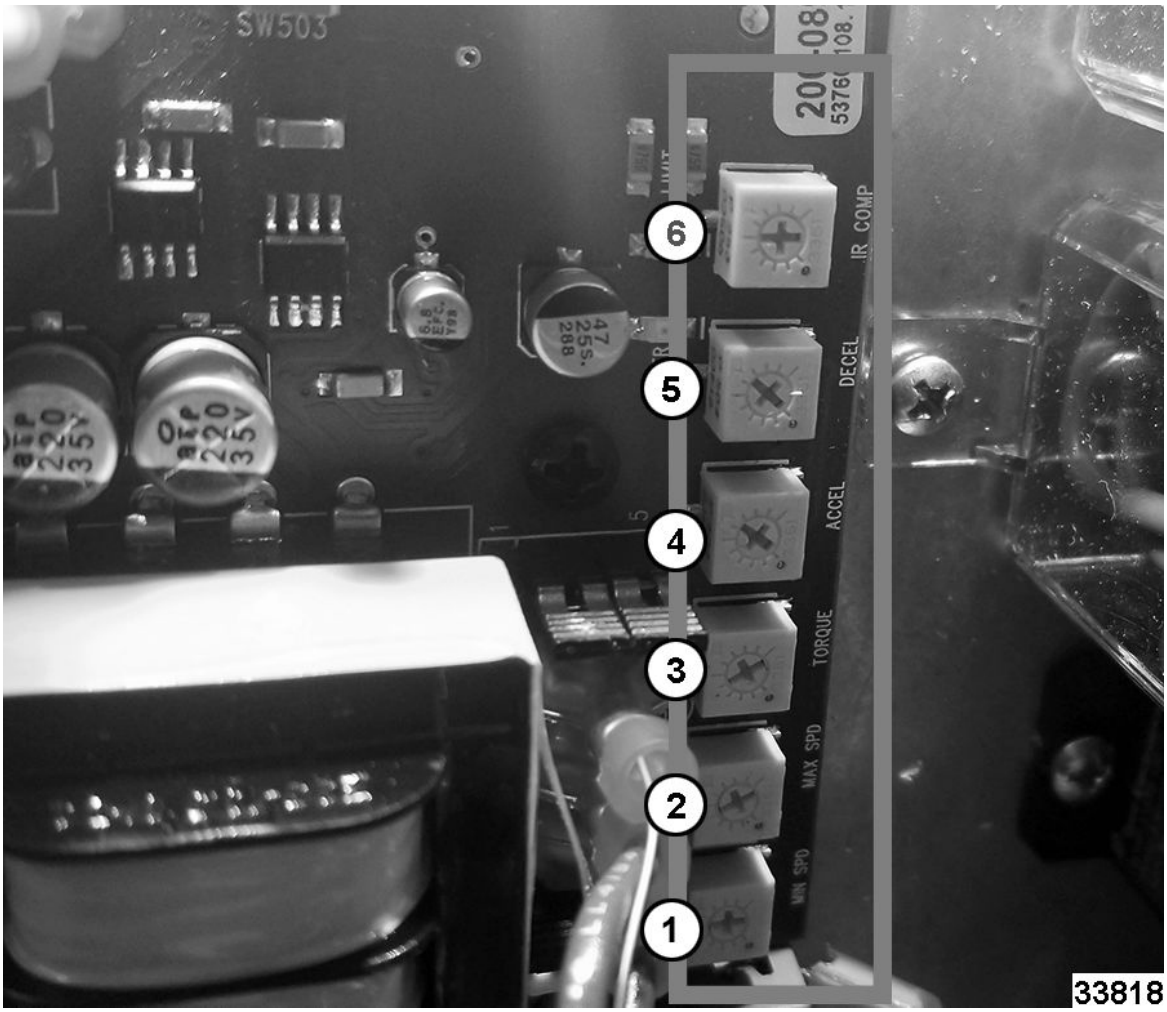

Fig. 67

ELECTRICAL OPERATION

COMPONENT FUNCTION (STATIONARY & TILTING MODELS)

Water Level Control (WLC LLCO)	Low water level control. Monitors condition of the WLC LLCO water level probe. Protects kettle from a low water condition in the reservoir jacket.
Probe, Water Level (LLCO)	Low Level Cut-Off (LLCO) probe connected to WLC (LLCO). Controls power to heating circuit.
Fuse, (1FU)	Time delay 4 amp - 250v fuse. Located on L1 of machine supply power. Protects control circuitry from over-currents.
Switch (1PAS), Pressure	Pressure cut-out protection for the reservoir jacket. Range is 38 to 42 PSI. Removes power from control circuit if pressure in the jacket rises above switch setting.
Transformer (1T)	Steps down the supply voltage to 24VAC (control circuit voltage).
Switch (1S), Power . . .	Controls 120VAC to kettle control circuit
Switch (2S), Tilt	Tilting models only. N.O. switch contacts are held closed when kettle is in the upright position and will open to remove power from control circuit when kettle is tilted. With kettle tilted, the N.C. switch contacts return to the closed position and energize K3 raise-enable relay coil.
Temperature Controller	Cycles power to blower motor (1MOT), heat lamp (3LT) and transformer (1T). Allows ignition control circuit to energize and light the burner to maintain set point temperature. An external set point potentiometer is used for temperature adjustments.
Gas Shut-Off Valve (1SOL)	Tilting models only. Additional solenoid valve to shut off the gas supply and remove line pressure on the special gas line fittings that run through gear box (when kettle is not in use). This increases seal life on the special fittings.
Timer (1TMR), Delay on Make	Provides a 15 second delay before energizing relay K4.
Relay, K4	Relay contacts provide 24VAC input signal to blower speed control connector pins (J5.4 or J5.3) for blower motor low and high speed operation.
Relay, Raise-Enable, K3	Power tilting option only. Allows kettle to raise when the tilt switch (2S) is un-operated (kettle tilted) and K3 raise-enable N.O. contacts are closed. K3 relay coil is energized through the N.C. contacts on tilt switch (2S).
Blower Speed Control	Controls blower motor speed via a 24VDC pulse width modulation (PWM) signal to the blower motor. 24VAC voltage signal to the control and the control's switch settings (S1, SW2 & SW4) determine low speed or high speed blower operation.
Blower Motor (1MOT)	Draws gas from the gas valve outlet into the blower housing for the gas/air mixture delivered to the burner.
Gas Valve	Regulates gas line supply pressure down to atmospheric pressure level and functions as a "zero pressure regulator". The dual solenoid valve (1 main; 1 safety backup) is attached at the air inlet on the blower motor housing. Gas valve receives power from ignition module.
Ignition Module	Controls and monitors burner ignition. Energizes main valve coil and generates spark for burner ignition. Monitors the presence of flame. Includes an accessible fast acting 3 amp - 250v fuse to protect ignition module.
Ignitor/Flame Sense	Ignites the gas burner and senses the presence of flame. The flame presence generates a micro-amp flame sense current that is rectified to the ignition module.
Light (1LT), Power	Amber (AM) colored light. On when power switch is on.

Light (2LT), Low Water . . . . . . Red (RD) colored light. On when water level in the reservoir jacket drops below water level (LLCO) probe.

Light (3LT), Heat . . . . . . Amber (AM) colored light. On when temperature controller is calling for heat.

Ignition Fail (4LT) . . . . . Amber (RD) colored light. On when burner does not light.

COMPONENT FUNCTION (POWER TILTING OPTION)

DC Tilt Motor Controller . . . . . . Controls DC tilt motor operation to tilt the kettle and provides motor acceleration control each time the controller is powered. The controller outputs approximately 90VDC to power the motor.

DC Tilt Motor . . . . . . Operates gear reducer to tilt the kettle. When the correct voltage polarity is applied through K1 contacts, motor rotates CW to raise the kettle. When reverse voltage polarity is applied through K2 contacts, motor rotates CCW to tilt the kettle. Rotation direction as viewed from shaft end.

Transformer (2T) . . . . . Steps down supply voltage to 24VAC (power tilt circuit voltage).

Tilt Motor Switch (Momentary On/Off/ On) . . . . . . Energizes K1 relay coil thru K3 raise-enable contacts (N.O.) to raise the kettle. Energizes K2 relay coil thru down limit switch contacts (N.C.) to tilt the kettle. The switch positions are: Center neutral (starting) position off; Momentary on - tilt kettle; Momentary on - raise kettle.

Down Limit Switch . . . . N.C. contacts function as down limit switch to remove power from K2 relay coil when kettle is fully tilted (travel stops).

K1 "Up" Relay (3PDT) . . . . . . Supplies power to motorized tilt circuit to raise the kettle when 24VAC coil is energized.

K2 "Down" Relay (3PDT) . . . . . . Supplies power to motorized tilt circuit to tilt the kettle when 24VAC coil is energized by the tilt control switch. The voltage polarity to the DC motor is reversed through K2 contacts to turn motor CW and tilt the kettle.

COMPONENT LOCATION (STATIONARY & TILTING MODELS)

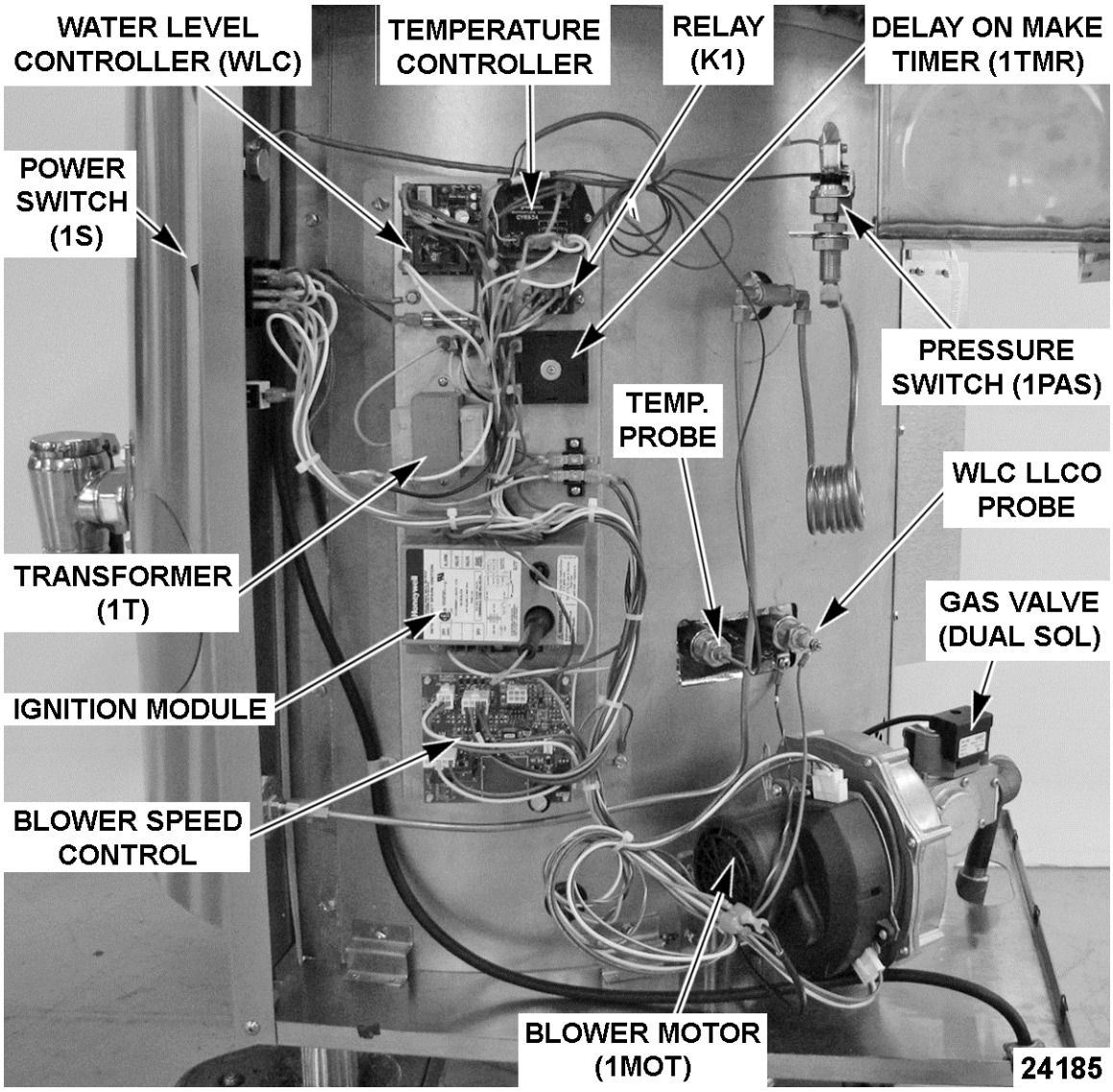

K Series Stationary Gas Kettle - Controls Side

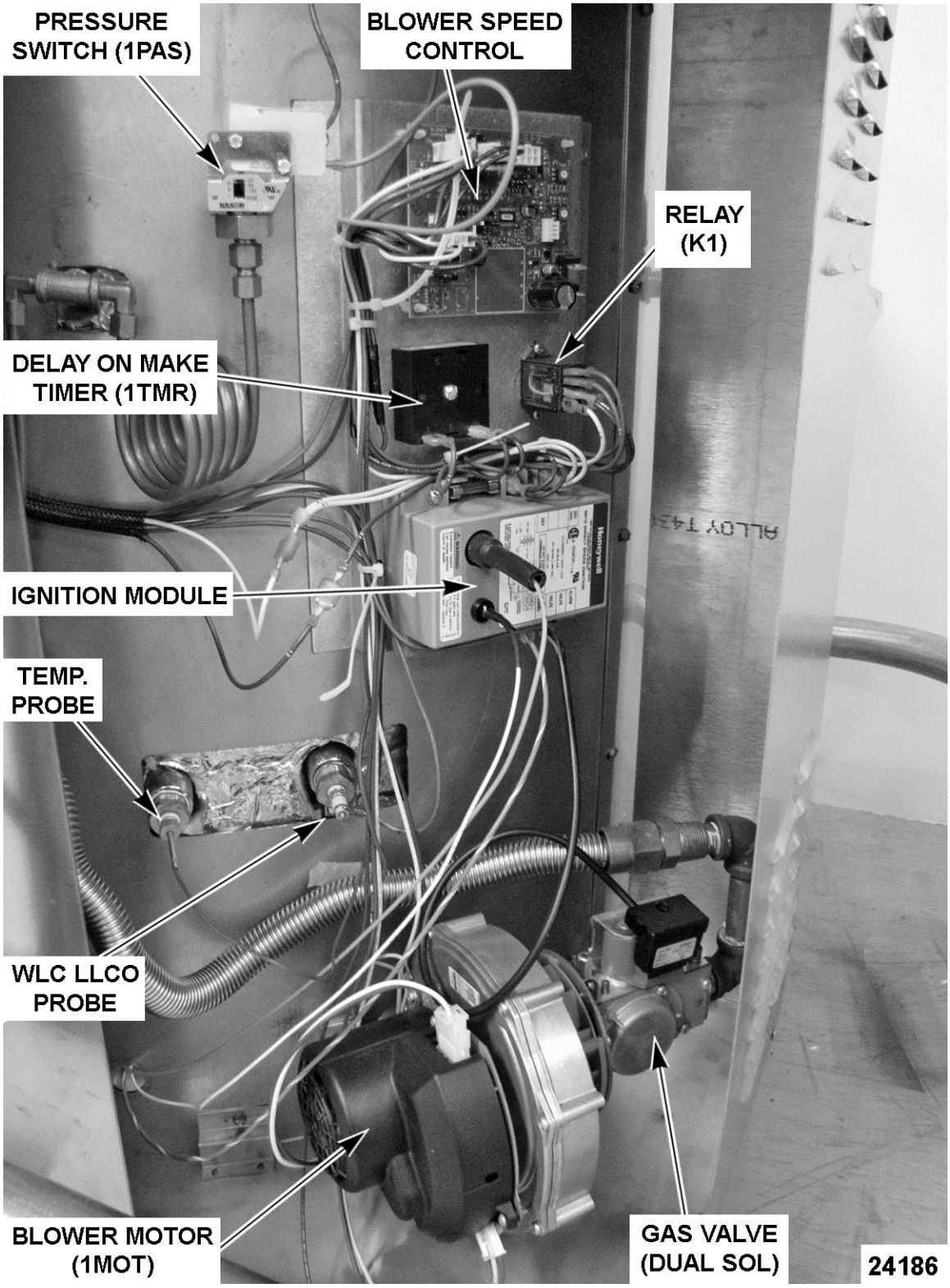

K Series Tilting Gas Kettle - Controls Side

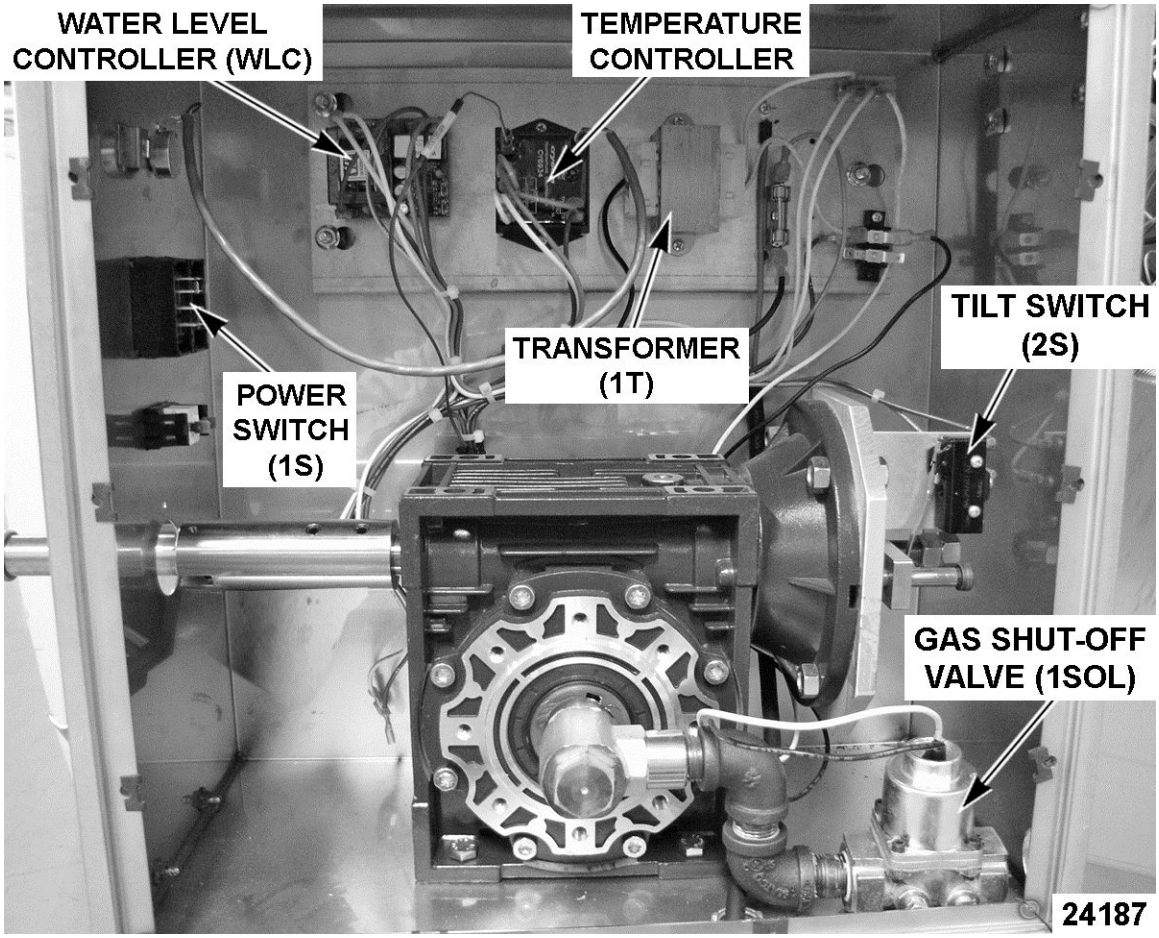

K Series Manual Tilt Gas Kettle - Control Box Area

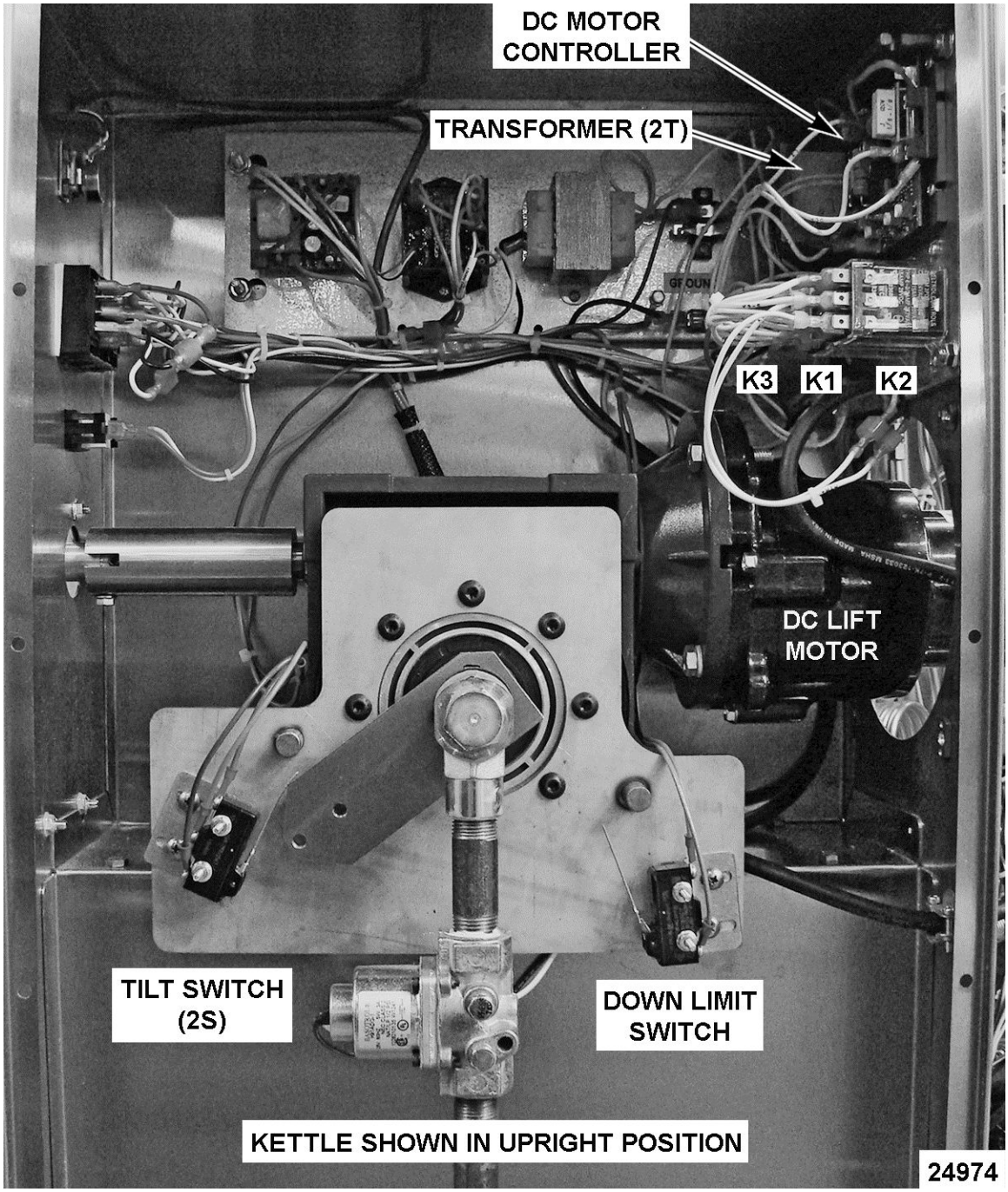

K Series Gas Kettle with Power Tilt Option - Control Box Area

SEQUENCE OF OPERATION (KETTLE CONTROL CIRCUIT)

Refer to Schematic diagram AI3537 for stationary and manual tilting kettle models. Kettles with Power Tilt, refer to Sequence of Operation - Power Tilt Option and schematic diagram AI3538.

1. Conditions.

   A. Kettle connected to 120VAC supply and is properly grounded.

   B. Kettle connected to correct gas supply and the supply is on.

   C. Power switch (1S) and light (1LT) (amber) are off.

   D. Low water light (2LT) (red) is off.

E. Tilt switch (2S) operated, N.O. contacts held closed (kettle in the full upright position - tilting models only).

F. Pressure switch (1PAS) N.C. contacts are closed.

G. Temperature dial at lowest setting (potentiometer fully CCW).

1) Internal relay N.O. contacts are open.

H. Kettle at room temperature.

2. Power switch ON.

A. Power provided to the power tilt circuit (kettels with power tilt option only).

B. Power light (1LT) (amber) comes on.

C. 120VAC to water level controller through tilt switch (2S) N.O. contacts, held closed (tilting models only) and pressure switch (1PAS) N.C. contacts.

3. Water level control (WLC) energized.

A. WLC LLCO probe satisfied (fluid in kettle reservoir jacket at proper level).

1) LLCO LED comes on.

B. WLC LLCO N.C. contacts open. Low water light (2LT) (red) remains off.

C. WLC LLCO N.O. contacts close.

1) 120VAC to temperature controller.

4. Set the temperature dial to call for heat (warm/ simmer/boil).

A. 120VAC output from T8 on temperature controller.

1) Heat light (3LT) (amber) comes on.

2) Blower motor (1MOT) energized.

3) 120/24VAC transformer (1T) primary energized.

5. 24VAC is output from transformer (1T) secondary to heating circuit.

A. Gas shut-Off Valve (1SOL) energized (tilting models only).

B. Delay on make timer (1TMR) is energized and begins 15 second count down before output from timer is turned on (will energize relay K4).

NOTE: Relay K4 contacts provide the 24VAC input voltage signal to the blower speed control to select blower motor speed (low or high). The blower speed control (J6.4) sends a corresponding 24VDC pulse width modulation (PWM) output signal to the blower motor for low or high speed operation.

C. Blower speed control powered at connector J5.4 for blower motor low speed operation through K4 N.C. contacts. Blower at low speed.

D. Ignition module energized and trial for ignition begins. The module generates spark at ignitor and energizes the dual gas valve coils to open the valves and provide gas for the gas/air mixture to light the burner.

E. Burner lights and kettle heating begins. As long as the ignition control module senses a burner flame, the ignition module will continue to power the gas valve.

1) If burner flame is not sensed within 7 seconds, ignition module stops sparking, de-energizes gas valve coils and enters lockout mode.

2) If lockout, ignition fail light (4LT) (red) comes on.

F. Time expires on delay on make timer (1TMR). Timer output turns on and relay K4 is energized.

1) K4 N.C. contacts open and remove power from blower speed control at connector J5.4 (low speed blower operation).

2) K4 N.O. contacts close and apply power to blower speed control at connector J5.3 (high speed blower operation). Blower at high speed.

6. Kettle heat cycles with the temperature controller.

7. On tilting models only, when kettle is tilted to empty contents the tilt switch (2S) N.O. contacts open to remove power from control circuit. Tilt switch (2S) contacts will close when the kettle is returned to full upright position and resume normal operation.

A. Power light (1LT) (amber) remains on.

8. Kettle heating will continue to cycle with the temperature controller until the temperature dial is turned fully CCW or power switch is turned OFF.

SEQUENCE OF OPERATION (POWER TILTING OPTION)

Refer to schematic diagram AI3538 for power tilting option and AI3537 for the main control circuit diagram that includes Tilt Switch (2S) and Raise-Enable relay (K3).

1. Conditions.
   - A. 120VAC to kettle, polarity is correct, and is properly grounded.
   - B. Power switch off.
   - C. Tilt motor switch off (center position).
   - D. Kettle in the upright position.
   - E. Tilt switch (2S) operated, N.O. contacts held closed (kettle arm engages switch actuator).
   - F. K3 raise-enable relay N.O. contacts are open (raise-enable relay coil is de-energized).
   - G. Down limit switch N.C. contacts closed.
2. Power switch on.
   - A. Power light (1LT) (amber) comes on.
   - B. 120/24VAC transformer (2T) energized. Power to tilt motor switch common terminal.

NOTE: If the temperature dial is set to call for heat, the ignition trial starts and module begins sparking at ignitor.

3. Operate tilt motor switch to tilt the kettle (momentary on - tilt).
   - A. K2 down relay coil is energized through down limit switch N.C. contacts.
     1) K2 4/7 N.O. contacts close.
     2) K2 9/6 N.O. contacts close.
     3) K2 8/5 N.O. contacts close.
   - B. 120VAC to DC tilt motor controller through K2 4/7 N.O. contacts.
     1) 90VDC output is activated at terminals A + (positive) and A - (negative). DC tilt motor powered through K2 9/6 N.O. contacts, K2 8/5 N.O. contacts and kettle tilts.
   - C. Kettle tilted approximately 10° and tilt switch (2S) is un-operated (kettle arm disengages from switch actuator). 2S contacts change position from N.O. to N.C.
     1) With 2S N.O. contacts open - power is removed from control circuit and heating stops.
     2) With 2S N.C. contacts closed - Raise enable-relay coil (K3) is energized and K3 N.O. contacts close. No power is transferred to K1 up relay until tilt motor switch is operated to raise the kettle.
4. Kettle reaches full tilt position at approximately 95° and the down limit switch is operated. The down limit switch N.C. contacts open and K2 relay coil is de-energized.
   - A. The three sets of K2 N.O. contacts return to the open position. Power is removed from the DC motor controller, the DC tilt motor and kettle travel stops.
5. Operate tilt motor switch to return the kettle upright (momentary on - raise).
   - A. K1 up relay coil is energized through raise-enable (K3) closed contacts.
     1) K1 4/7 N.O. contacts close.
     2) K1 9/6 N.O. contacts close.
     3) K1 8/5 N.O. contacts close.
   - B. 120VAC to DC tilt motor controller through K1 4/7 N.O. contacts.
     1) 90VDC output is activated at terminals A + (positive) and A - (negative). DC tilt motor powered through K1 9/6 N.O. contacts, K1 8/5 N.O. contacts and kettle raises.
     2) After the kettle leaves full tilt position, the down limit switch is un-operated and the switch contacts return to N.C. position. The direction of kettle travel can then be reversed (if needed) by tilt motor switch.
6. Kettle reaches full upright position, the tilt switch (2S) is operated (kettle arm engages switch actuator). 2S contacts change position from N.C. to back to N.O.
   - A. With 2S N.O. contacts closed - power restored to control circuit and heating resumes.
   - B. With 2S N.C. contacts open - Raise enable-relay coil (K3) is de-energized and K3 N.O. contacts open. K1 up relay coil is de-energized.

C. The three sets of K1 N.O. contacts return to the open position. Power is removed from the DC motor controller, the DC tilt motor and kettle travel stops.

SCHEMATIC DIAGRAM (STATIONARY & TILTING MODELS)

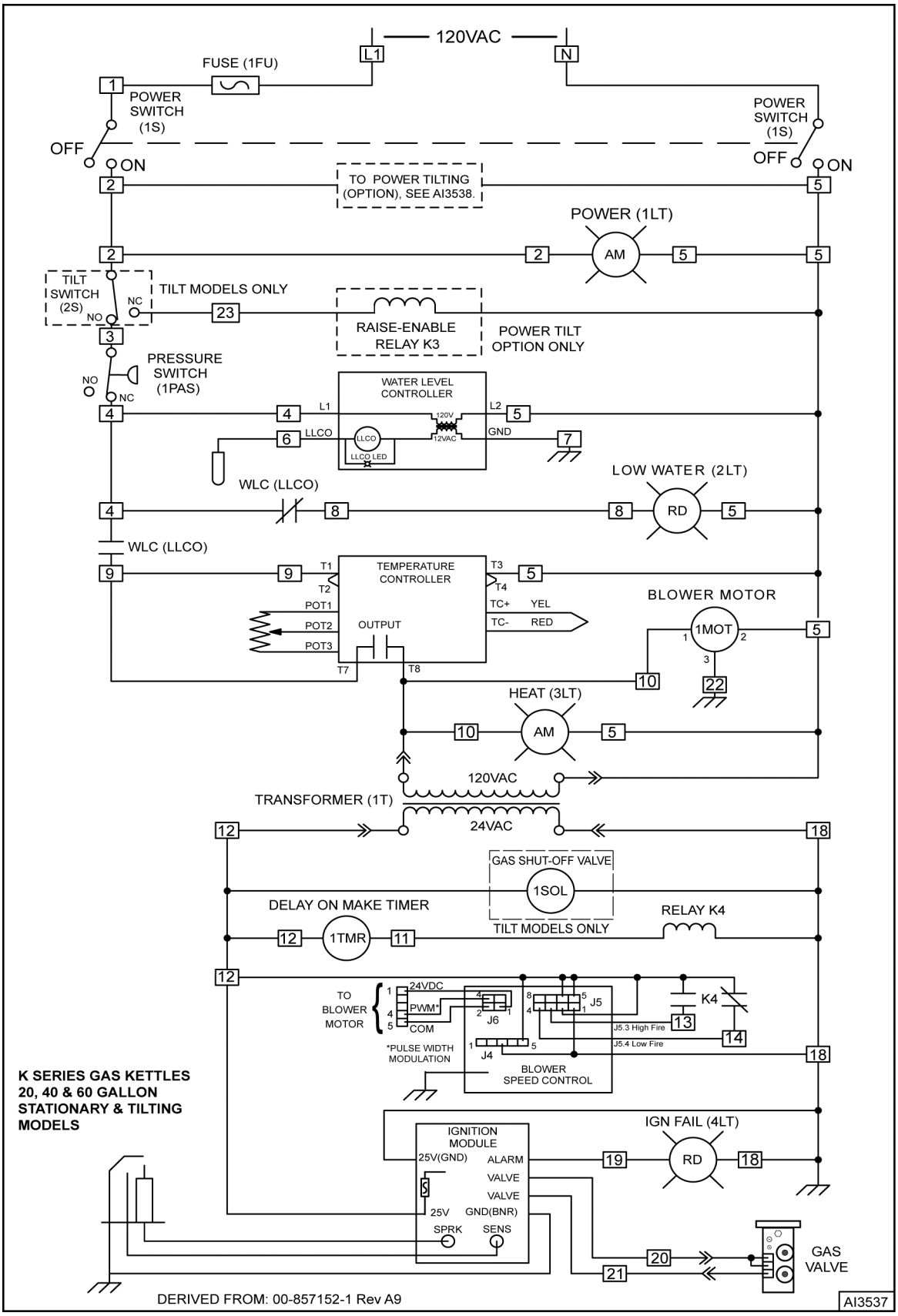

Fig. 72

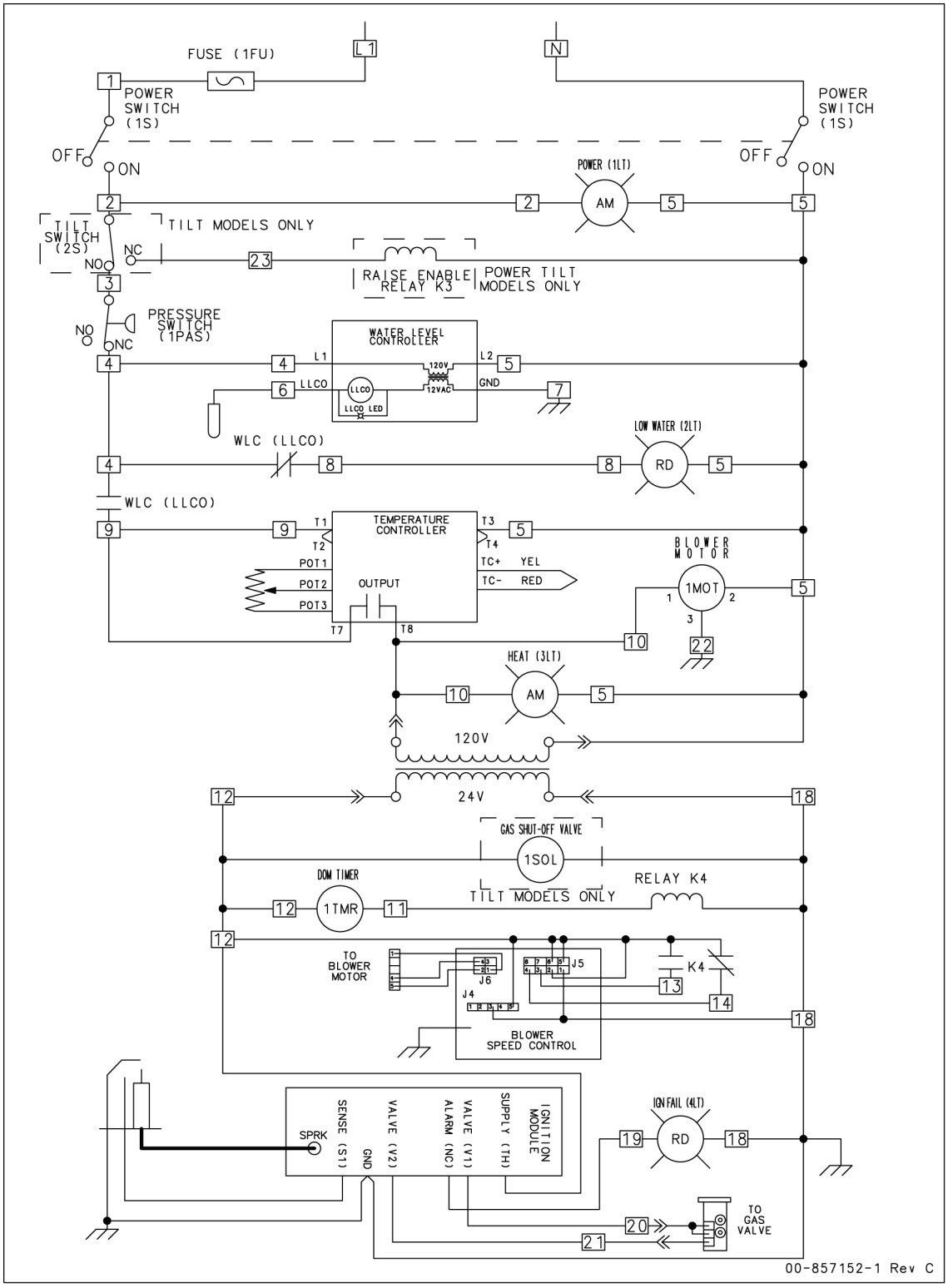

K SERIES GAS KETTLES 20, 40, & 60 GALLON STATIONARY & TILTING MODELS

DERIVED FROM: 00-857152-1 REV. C

AI4768

Fig. 73

SCHEMATIC DIAGRAM (POWER TILTING OPTION)

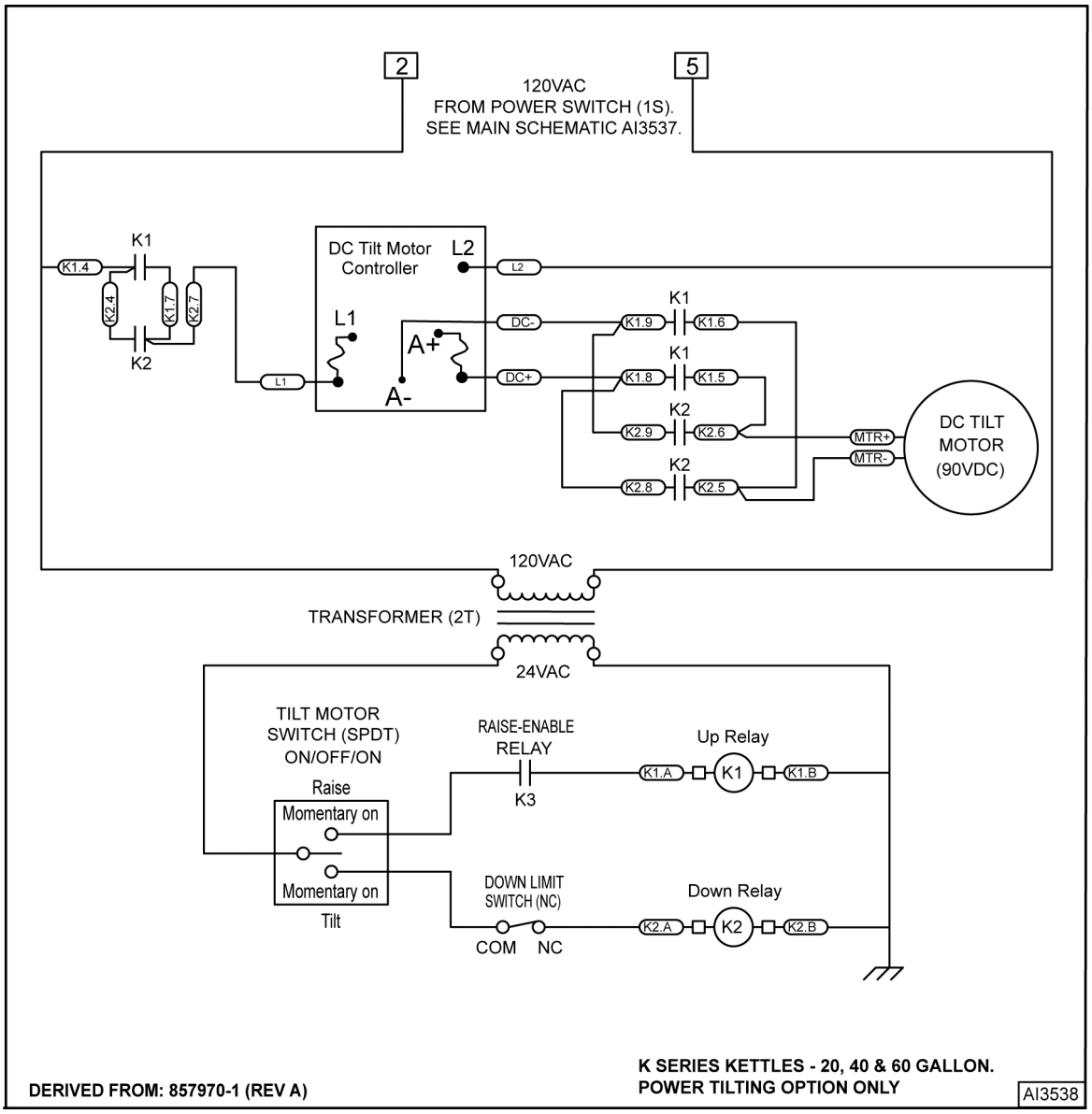

Fig. 74

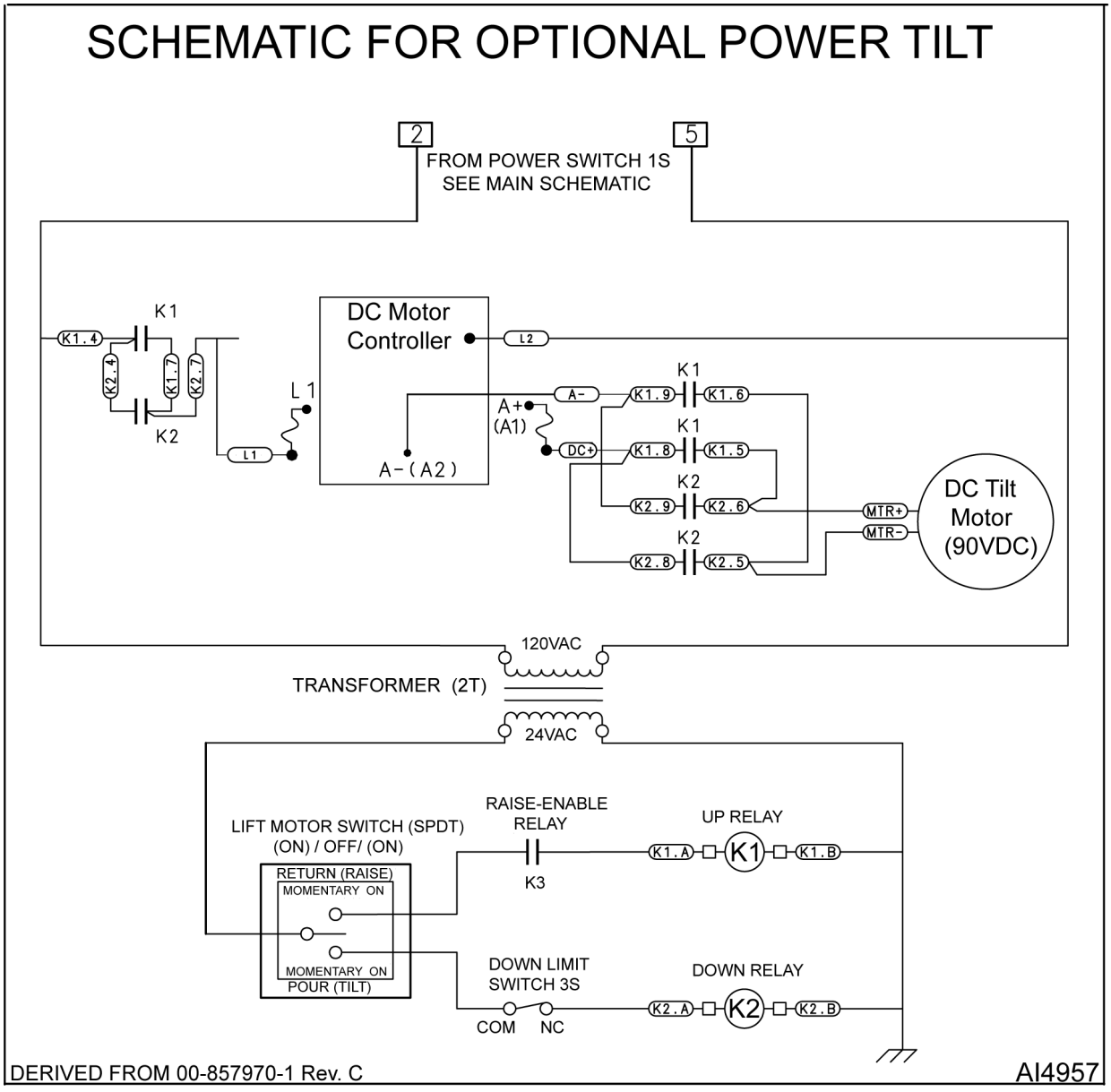
SCHEMATIC FOR OPTIONAL POWER TILT
2
5
FROM POWER SWITCH 1S
SEE MAIN SCHEMATIC
K1
K1.4
K2.4
K1.7
K2.7
K2
L1
L1
DC Motor
Controller
L2
A-(A2)
A+
(A1)
A-
DC+
K1
K1.9
K1.6
K1
K1.8
K1.5
K2
K2.9
K2.6
K2
K2.8
K2.5
MTR+
MTR-
DC Tilt
Motor
(90VDC)
120VAC
TRANSFORMER (2T)
24VAC
LIFT MOTOR SWITCH (SPDT)
(ON) / OFF/ (ON)
RETURN (RAISE)
MOMENTARY ON
MOMENTARY ON
POUR (TILT)
RAISE-ENABLE
RELAY
K3
UP RELAY
K1.A
K1
K1.B
DOWN LIMIT
SWITCH 3S
COM
NC
DOWN RELAY
K2.A
K2
K2.B
DERIVED FROM 00-857970-1 Rev. C
AI4957

Fig. 75

TROUBLESHOOTING

STATIONARY & TILTING - GENERAL

K Series Gas Kettles (Stationary & Tilting)	
SYMPTOM	**POSSIBLE CAUSE**
Kettle does not heat, power light is lit, heat light is lit, ignition fail light is lit, low water light is not lit, blower motor is ON (high speed is default for blower if speed control malfunctions).	1. Gas supply is OFF. 2. Transformer (1T) output voltage is low. 3. Tilting models only - Gas shut-off valve (1SOL) not receiving power or malfunction. 4. Spark ignitor. A. Spark probe dirty or corroded (poor spark). B. Burner flame sense current too low - dirty or corroded probe or flame sense wire connection corroded. C. Wet insulation in burner area. 5. Ignition module malfunction (no sparking at ignitor). 6. Gas valve malfunction.
Kettle does not heat, power light is lit, low water light is lit, heat light is not lit, blower motor not ON.	1. Incorrect voltage to water level control (internal circuit protects board from voltages above 132VAC or below 108VAC). Check supply voltage to kettle. Verify polarity on incoming power supply to unit. 2. Fluid level in reservoir jacket below water level probe (LLCO). Check fluid level in sight glass. 3. Kettle jacket was refilled incorrectly with deionized or reverse osmosis (RO) water. Use distilled water only. **NOTE:** Add approximately 1/8 teaspoon of salt to jacket fluid. Lightly rinse fill port and close it. 4. Water level probe (LLCO) wiring connection malfunction; or probe coated (not sensing fluid) or probe malfunction. 5. Water level control malfunction.
Kettle does not heat, power light is lit, low water light is not lit, heat light is not lit, blower motor not ON.	1. Tilting models only - Tilt switch (2S) is open: Kettle not fully upright or switch not adjusted properly; or switch malfunction. 2. Pressure switch (1PAS) open or malfunction (fixed, not adjustable). 3. WLC malfunction (water level ok in sight glass). **NOTE:** LLCO LED is ON (probe sensing fluid). 4. Temperature sensor malfunction; potentiometer setting too low or malfunction; or temperature controller malfunction. 5. Interconnecting wiring malfunction.

K Series Gas Kettles (Stationary & Tilting)	
SYMPTOM	**POSSIBLE CAUSE**
Kettle does not heat, power light is not lit.	1. Kettle unplugged; main circuit breaker off; or incoming supply line fuse F1 open. 2. Supply voltage incorrect. 3. Ground fault receptacle (GFCI) is tripped. 4. Hood system with a power interrupt is not ON. 5. Power switch off or malfunction. 6. Interconnecting wiring malfunction.
Kettle heats up slow or will not boil product.	1. No vacuum in reservoir jacket when kettle is cold. 2. Pressure relief valve is not seated properly (leaking) or malfunction. See VENTING. 3. Fill port is not fully closed and leaking. 4. Jacket overfilled with fluid. 5. Gas supply line to kettle is undersized for the gas volume required. **NOTE:** Increase gas line size to 125% of kettle rated BTU input. 6. Low gas supply pressure. 7. Temperature sensor malfunction; or potentiometer malfunction; or temperature controller missing jumper on J1 or malfunction. **NOTE:** Controller LED is ON when output is closed. 8. Blower does not increase to high speed. A. Delay on make timer (1TMR) malfunction. B. Relay K1 malfunction (N.O. contacts remain open with coil energized - Provides high speed signal to blower speed control). C. Blower speed control - switches not set properly or control malfunction (no output voltage to blower: J6-1 (24VDC); J6-2 (COM); J6-4 (PWM - pulse width modulation speed signal, not measurable with VOM). D. Blower malfunction. 9. Gas valve not adjusted properly or malfunction.
Low water light is lit or Low water in sight glass.	1. Tilting models only - Kettle tilted (not level). 2. Fluid level in kettle jacket is low. 3. Pressure relief valve is not seated properly (leaking) or malfunction. See VENTING. 4. Fill port is not fully closed and leaking. 5. Kettle jacket was refilled incorrectly with deionized or reverse osmosis (RO) water. Use distilled water only. **NOTE:** Add approximately 1/8 teaspoon of salt to jacket water. Lightly rinse fill port and close it.

K Series Gas Kettles (Stationary & Tilting)	
SYMPTOM	**POSSIBLE CAUSE**
Kettle not heating (burner not lighting during trial for ignition or staying lit), heat light is lit, ignition fail light is ON, power light is lit, blower is ON (high speed is default for blower if speed control malfunctions). **NOTE:** If heat light is not lit but the blower is running, the light or wiring to the light may be malfunctioning.	1. Gas supply not on. 2. Tilting models only - Gas shut-off valve (1SOL) not receiving power or malfunction. 3. Ignition module not receiving power. 4. Unit not properly grounded and/or polarity of incoming power is incorrect on automatic ignition systems. 5. Low gas supply pressure. 6. Spark ignitor. A. Spark probe dirty or corroded (poor spark). B. Burner flame sense current too low - dirty or corroded probe; or flame sense wire connection corroded. 7. Ignition module malfunction (no sparking at ignitor). 8. Blower speed control - switches not set properly or control malfunction (no output voltage to blower: J6-1 (24VDC), J6-2 (COM), J6-4 (PWM - pulse width modulation speed signal, not measurable with VOM). 9. Blower intake clogged or blower malfunction. 10. Gas valve not adjusted properly or malfunction. 11. Burner insulation wet. Refer to BURNER.

POWER TILTING OPTION ONLY

POWER TILTING OPTION ONLY	
SYMPTOM	**POSSIBLE CAUSES**
Kettle will not raise.	1. Tilt switch (2S) open or malfunction. 2. Transformer 2T inoperative. 3. Power switch off or malfunction. 4. Tilt control switch malfunction (momentary on - raise). 5. Raise-enable relay (K3) malfunction. 6. K1 up relay malfunction. 7. DC motor controller - Fuses open or controller malfunction. 8. DC tilt motor inoperative. 9. Gear reducer malfunction.

POWER TILTING OPTION ONLY	
SYMPTOM	**POSSIBLE CAUSES**
Kettle will not tilt	1. Transformer 2T inoperative. 2. Power switch off or malfunction. 3. Tilt motor switch malfunction (momentary on - tilt). 4. Down limit switch open or malfunction. 5. K2 down relay malfunction. 6. DC tilt motor controller - Fuses open or controller malfunction. 7. DC tilt motor inoperative. 8. Gear reducer malfunction.