Project _____

AIA # _____ SIS # _____

Item # _____ Quantity _____ C.S.I. Section 114000

KGLT SERIES

Gas Floor Mounted Tilting ⅔ Jacketed Kettles



Model K40GLT

GAS-FIRED c UL us LISTED

CLASSIFIED UL EPH ANSI/NSF Standard #4

SPECIFIER STATEMENT

Gas self-contained, stainless steel fully insulated, ⅔ jacketed floor mounted tilting steam kettle. Ellipsoidal bottom kettle liner formed and fully welded type 316 and type 304 stainless steel exterior with (¼ x ⅝ inch 20 gallons) (⅜ x 1 inch 40 gallons and greater) heavy bar rim, embossed gallon/liter markings. 50 psi (3.4 kg/cm²) steam jacket rating. Stainless steel splash proof enclosure for controls, self-locking tilt mechanism and faucet bracket. Controls include a power switch, power "on" light, solid state temperature control with graduated warm, simmer and boil setting, vacuum/pressure gauge, pressure relief valve, low water light and low water shut-off. Gas control with combination gas valve with internal regulator, flame failure and gas type is field convertible. High efficiency Power Burner Heating System (64% to 68% efficiency). Kettle tilts forward 95° to completely empty. Tubular stainless steel legs with removable section and flanged feet. Steam jacket permanently filled with treated, distilled water. 110-120V, 50-60 Hz, 5A, with 6 foot cord and three-prong grounding plug.

UL Certified to ANSI Z83.11/CSA 1.8. Certified to NSF Standard #4. Meets ASME.

SPAN GAS TECHNOLOGY ENABLES FIELD ADJUSTABLE TO PROPANE GAS AND ALTITUDE.

MODELS

- ❑ **K20GLT** 100,000 BTU/hr., 20 gallon true working capacity
- ❑ **K40GLT** 100,000 BTU/hr., 40 gallon true working capacity
- ❑ **K60GLT** 100,000 BTU/hr., 60 gallon true working capacity

STANDARD FEATURES

- Gas self-contained, stainless steel, ⅔ jacketed floor mounted tilting steam kettle
- Ellipsoidal bottom kettle liner formed and fully welded standard type 316 and type 304 stainless steel exterior
- Heavy bar rim (¼ x ⅝ inch 20 gallons) (⅜ x 1 inch 40 gallons and greater)
- Embossed gallon/liter markings
- 50 psi (3.4 kg/cm²) steam jacket rating
- Stainless steel enclosure for "water resistant" controls, self-locking tilt mechanism and faucet bracket
- Controls include a power switch, power "on" light, solid state temperature control, vacuum/pressure gauge, pressure relief valve, low water light and lower water shut-off
- Elevation from sea level to 8,999 feet standard
- Kettle tilts forward 95° to completely empty
- Tubular stainless steel legs with flanged feet
- One year limited parts and labor warranty

OPTIONS

- ❑ Two inch bolt on compression tangent draw-off valve with perforated strainer
- ❑ Two inch bolt on plug tangent draw-off valve with perforated strainer
- ❑ Three inch bolt on compression tangent draw-off valve with perforated strainer increases height of kettle
- ❑ Security facility package:
  a. Security type fasteners with tack welds
  b. Controls protected with lockable cover
- ❑ Stainless steel protector for the draw-off valve with chain
- ❑ Second year extended limited parts and labor warranty

ACCESSORIES (PACKAGED AND SOLD SEPARATELY)

- ❑ Spring assist hinged stainless steel cover with condensate ring and drop down lift handle
- ❑ Pouring lip strainer
- ❑ Clean-up kit, includes draw-off brush, clean-up brush and paddle scrapper with 40" handle
- ❑ Stainless steel 48" whip
- ❑ Non-perforated strainer to prevent food from entering the draw-off tube during cooking
- ❑ (12") (18" double jointed) single pantry lead-free faucet
- ❑ (12") (18" double jointed) double pantry lead-free faucet
- ❑ Double pantry washdown hose with 16" add-on lead-free faucet with vacuum breaker
- ❑ Double pantry washdown hose with lead-free vacuum breaker
- ❑ Double pantry pot filler with lead-free vacuum breaker

KGLT SERIES – Gas Floor Mounted Tilting ⅔ Jacketed Kettles

Approved by_____ Date_____ Approved by_____ Date_____

KGLT SERIES
Gas Floor Mounted Tilting ⅔ Jacketed Kettles

SERVICE CONNECTIONS

Electric Connection: 110-120V, 50-60 Hz, 5A, with 6 foot cord and three-prong grounding plug.

Gas Connection: ¾" NPT supply line required.

Embossed Gallon/Liter Markings		
20-Gallon	**40-Gallon**	**60-Gallon**
20 - 76	40 - 151	60 - 227
18 - 68	35 - 132	55 - 209
16 - 61	30 - 114	50 - 189
14 - 53	25 - 95	45 - 171
12 - 46	20 - 76	40 - 151
10 - 38	15 - 57	35 - 132
		25 - 95
		20 - 76

TRUE WORKING CAPACITIES (IN 4 OZ. SERVINGS)

80 quarts/20 gallons/76 liters/640 servings
120 quarts/40 gallons/152 liters/1,280 servings
160 quarts/60 gallons/228 liters/1,920 servings

NOTES

- Dimensions which locate the above connections have a tolerance of + or -3" (+ or -75mm). Normal dimensions are in inches. Dimensions in [ ] are in millimeters.
- Installation of backflow preventers, vacuum breakers and other specific code requirements is the responsibility of the owner and installer. It is the responsibility of the owner and installer to comply with local codes.
- Do not use plastic drains.
- Do not connect this unit to a ground-fault circuit-interrupter (GFCI) 125-volt, single-phase, 15- and 20-ampere receptacle. Electronic burner ignition systems are prone to nuisance tripping and possible ignition failure.
- This appliance is manufactured for commercial installation only and is not intended for home use.

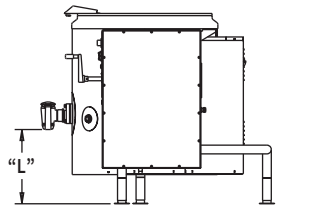

SHOWN WITH OPTIONAL DRAW-OFF VALVE
(2" PLUG VALVE)

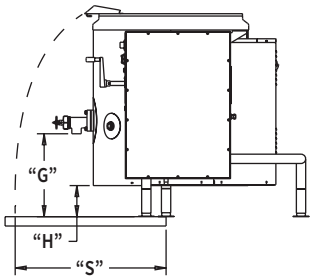

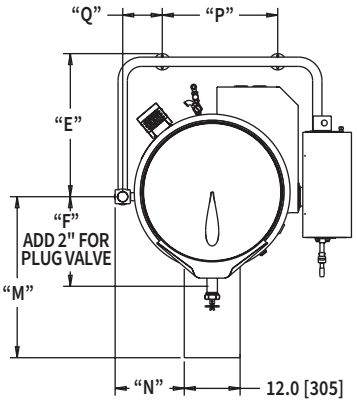

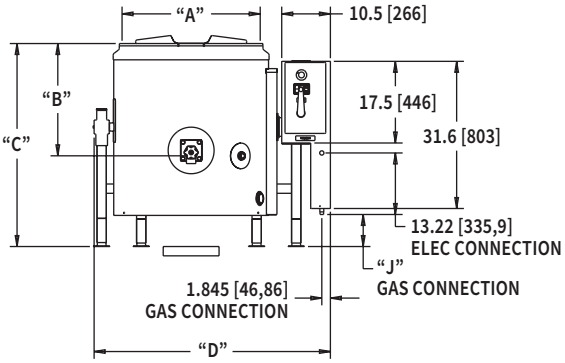

SHOWN WITH OPTIONAL DRAW-OFF VALVE
(2" COMPRESSION VALVE)

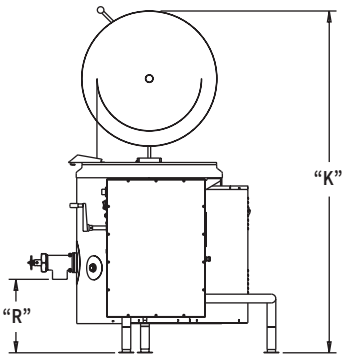

SHOWN WITH OPTIONAL DRAW-OFF VALVE AND LID
(3" COMPRESSION VALVE)

CAD and/or Revit Files Available

Model	True Working Capacity	A	B	C	D	E	F	G	H	J	K	L	M	N	P	Q	R	S
K20GLT	20 gallons	21.8	15.3	38.3	42.7	26.8	16.0	21.4	8.1	6.9	67.1	20.7	28.0	10.8	16.7	8.5	20.4	25.0
	76 liters	554	389	973	1085	681	406	544	206	175	1704	526	711	274	424	216	518	635
K40GLT	40 gallons	25.8	21.2	39.9	46.8	28.8	18.1	17.1	6.6	6.9	71.0	16.3	31.3	12.8	20.8	8.5	16.1	29.4
	152 liters	655	538	1013	1189	732	460	434	168	175	1803	414	795	325	528	216	408	747
K60GLT	60 gallons	29.7	24.1	43.6	50.8	30.8	19.3	17.8	6.7	6.9	78.3	17.0	34.6	14.9	24.8	8.5	16.8	32.7
	227 liters	754	612	1107	1290	782	490	452	170	175	1989	432	879	378	630	216	427	831

As continued product improvement is a policy of Vulcan, specifications are subject to change without notice.