CATALOG OF REPLACEMENT PARTS

VHG SERIES FRYERS

1VHG50A	
1VHG75A	1VHG75A
2VHG50A	2VHG50A
2VHG75A	2VHG75A
3VHG50A	3VHG50A
3VHG75A	3VHG75A
4VHG50A	4VHG50A
4VHG75A	4VHG75A
1VHG50C	1VHG50C
1VHG75C	1VHG75C
2VHG50C	2VHG50C
2VHG75C	2VHG75C
3VHG50C	3VHG50C
3VHG75C	3VHG75C
4VHG50C	4VHG50C
4VHG75C	4VHG75C
1VHG50D	1VHG50D
1VHG75D	1VHG75D
2VHG50D	2VHG50D
2VHG75D	2VHG75D
3VHG50D	3VHG50D
3VHG75D	3VHG75D
4VHG50D	4VHG50D
4VHG75D	4VHG75D

 © Vulcan 2026

Table of Contents

4 CONTROLS (SINGLE) (BEFORE S/N 65026221)
6 CONTROLS (SINGLE) (STARTING S/N 65026221)
8 CONTROLS (MULTIPLE) (BEFORE S/N 65026221)
12 CONTROLS (MULTIPLE) (STARTING S/N 65026221)
14 POWER BOX
16 PANELS (BEFORE S/N 65026221)
18 PANELS (STARTING S/N 65026221)
20 FILTRATION (SINGLE) (BEFORE S/N 65026221)
22 FILTRATION (MULTIPLE) (BEFORE S/N 65026221)
24 FILTRATION (STARTING S/N 65026221)
26 COMBUSTION
28 WIRE HARNESSES
30 RECOMMENDED SPARE PARTS LIST

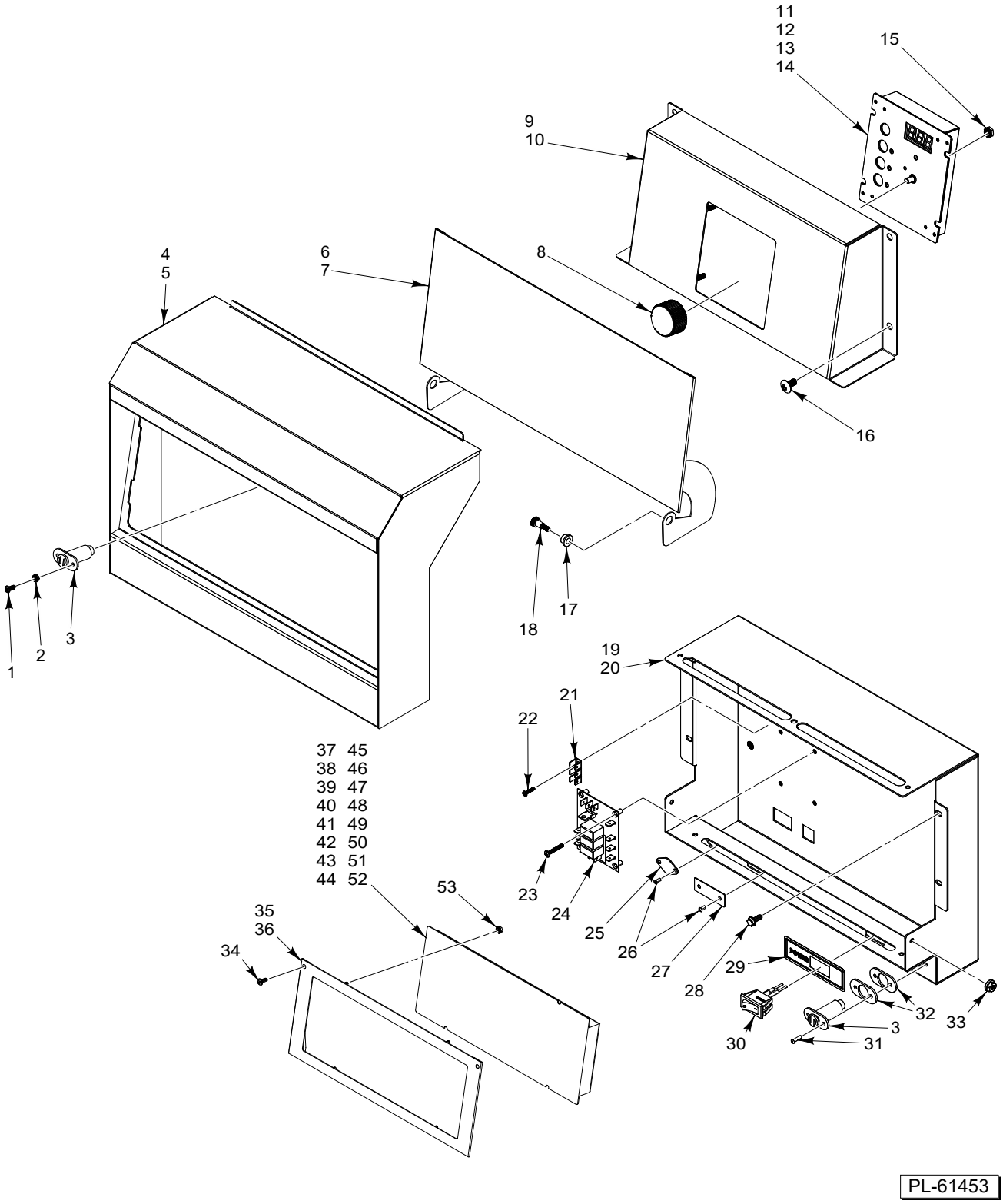

CONTROLS
(SINGLE)
(BEFORE S/N 65026221)

CONTROLS
(SINGLE)
(BEFORE S/N 65026221)

ILLUS. PL-61453	PART NO.	NAME OF PART	AMT.
1	00-730030	Mach. Screw 6-32 x 3/4 In.	2
2	NS-046-89	Nut Assy. 6-32 Hex KEPS	2
3	00-976750-00026	Magnet - Popper	2
4	00-976711-0AS45	Bullnose (Single) (VHG50)	1
5	00-976716-0AS75	Bullnose (Single) (VHG75)	1
6	00-976711-0004A	Door - Control Panel (VHG50)	1
7	00-976716-0004A	Door - Control Panel (VHG75)	1
8	00-976722-00004	Knob - Control	1
9	00-976711-0007A	Mount - Control Panel (VHG50) (A-Control)	1
10	00-976716-0007A	Mount - Control Panel (VHG75) (A-Control)	1
11	00-976722-00001	Overlay (A-Control) (W/ Filtration)	1
12	00-976722-00002	Overlay (A-Control) (W/O Filtration)	1
13	00-976722-00005	Kit - A-Control (W/ Filtration) (Incls. Controller, Overlay, & Knob)	AR
14	00-976722-00006	Kit - A-Control (W/O Filtration) (Incls. Controller, Overlay, & Knob)	AR
15	00-730534	Nut 10-24 Hex KEPS	4
16	00-723369	Mach. Screw 1/4-20 x 1/2 Phil. Truss Hd.	4
17	00-976750-00032	Bearing 1/4 In.	2
18	SC-132-86	Screw 10-24, 1/4 x 5/16	2
19	00-976711-00003	Box - Control Panel (VHG50)	1
20	00-976716-00003	Box - Control Panel (VHG75)	1
21	00-419317	Terminal - Stationary	1
22	SC-018-55	Mach. Screw 4-40 x 1/2 Phil. Pan Hd.	2
23	00-944267	Screw 6-32 x 13/16 Phil. Pan Hd.	4
24	00-427759-00003	Board - Interface	1
25	00-976750-00028	Magnet	1
26	RS-032-77	Rivet	2
27	00-959000-00003	Plate - Cover	1
28	SD-032-07	Self-Tapping Screw 10-24 x 1/2 Hex. Hex Washer Hd., Type TT	4
29	00-428906-00001	Overlay - Power	1
30	00-427755-000G1	Rocker Switch Assy.	1
31	RS-032-77	Rivet	2
32	00-976750-00027	Spacer - Magnet	2
33	NS-048-07	Lock Nut 10-24 Hex Special	2
34	00-730228	Self-Tapping Screw 10-24 x 1/2 Phil. Truss Hd.	2
35	00-976711-004CD	Plate - Control Mount (VHG50) (C/D-Control)	1
36	00-976716-004CD	Plate - Control Mount (VHG75) (C/D-Control)	1
37	00-976705-00005	Kit - D-Control (W/ Filtration) (Incls. Controller & Overlay)	AR
38	00-976705-00006	Kit - D-Control (W/O Filtration) (Incls. Controller & Overlay)	AR
39	00-976705-00001	Overlay (W/ Filtration) (D Control)	1
40	00-976705-00002	Overlay (W/O Filtration) (D Control)	1
41	00-976706-00009	Kit - C-Control (W/ Filtration) (1-18) (Incls. Controller & Overlay)	AR
42	00-976706-00010	Kit - C-Control (W/O Filtration) (1-18) (Incls. Controller & Overlay)	AR
43	00-976706-00011	Kit - C-Control (W/ Filtration) (1-9) (Incls. Controller & Overlay)	AR
44	00-976706-00012	Kit - C-Control (W/O Filtration) (1-9) (Incls. Controller & Overlay)	AR
45	00-976706-00013	Kit - C-Control (W/ Filtration) (1-6) (Incls. Controller & Overlay)	AR
46	00-976706-00014	Kit - C-Control (W/O Filtration) (1-6) (Incls. Controller & Overlay)	AR
47	00-976706-00001	Overlay (W/ Filtration) (1-18) (C Control)	1
48	00-976706-00002	Overlay (W/O Filtration) (1-18) (C Control)	1
49	00-976706-00003	Overlay (W/ Filtration) (1-9) (C Control)	1
50	00-976706-00004	Overlay (W/O Filtration) (1-9) (C Control)	1
51	00-976706-00005	Overlay (W/ Filtration) (1-6) (C Control)	1
52	00-976706-00006	Overlay (W/O Filtration) (1-6) (C Control)	1
53	00-730534	Nut 10-24 Hex KEPS	4

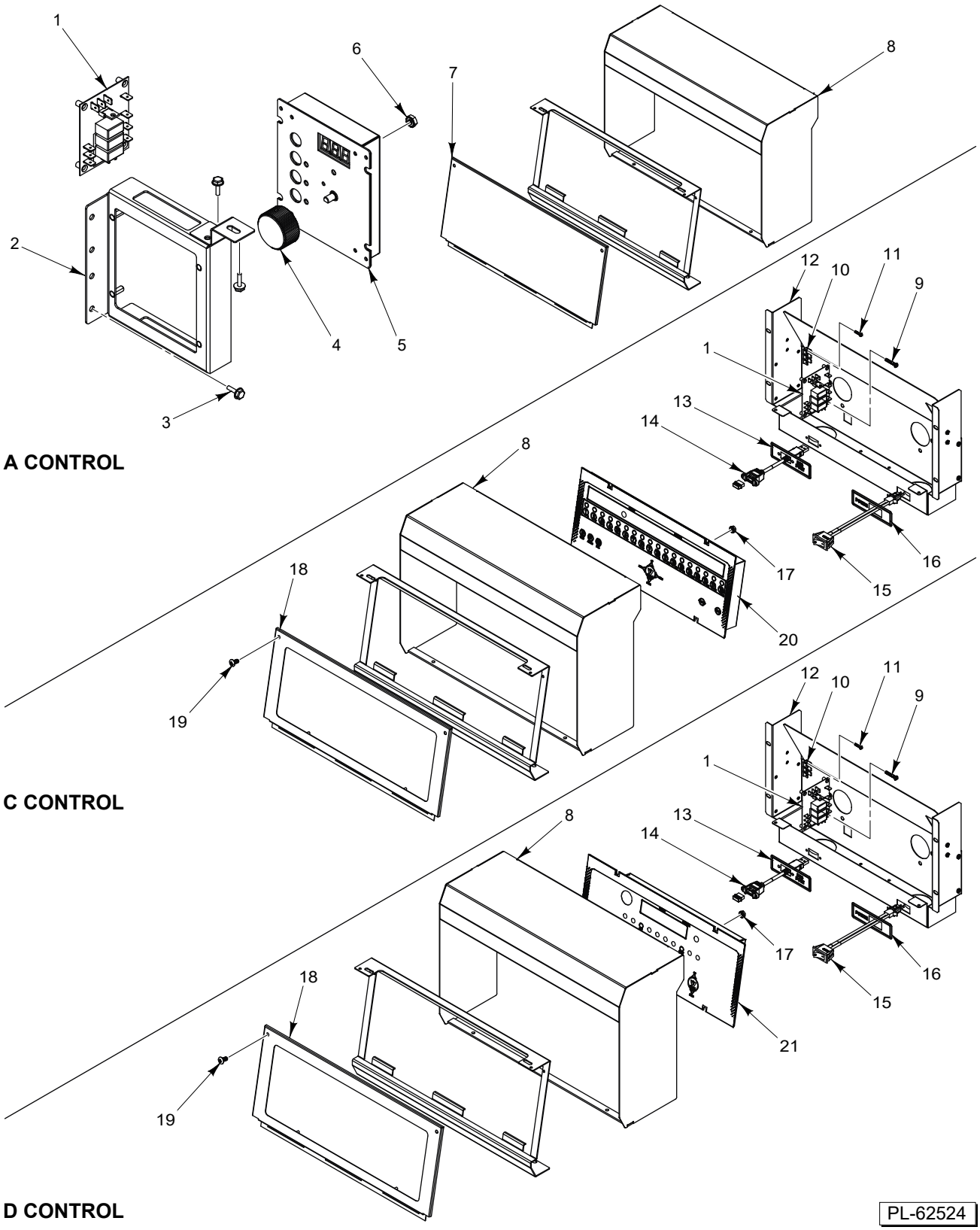

CONTROLS
(SINGLE)
(STARTING S/N 65026221)

CONTROLS
(SINGLE)
(STARTING S/N 65026221)

ILLUS. PL-62524	PART NO.	NAME OF PART	AMT.
1	00-427759-00003	Board - Interface	1
2	00-976722-00008	Bracket - A-Control Mount	1
3	SD-032-07	Self-Tapping Screw 10-24 x 1/2 Hex. Hex Washer Hd., Type TT	4
4	00-976722-00004	Knob - Control	1
5	00-976722-00005	Kit - A-Control (W/ Filtration) (Incls. Controller, Overlay, & Knob)	AR
5	00-976722-00006	Kit - A-Control (W/O Filtration) (Incls. Controller, Overlay, & Knob)	AR
5	00-976722-00001	Overlay (A-Control) (W/ Filtration)	1
5	00-976722-00002	Overlay (A-Control) (W/O Filtration)	1
6	00-730534	Nut 10-24 Hex KEPS	4
7	00-946103-00003	Plate - A-Control Cover (VHG50)	1
7	00-946103-00004	Plate - A-Control Cover (VHG75)	1
8	00-946099-000G1	Bullnose Assy. (VHG50)	1
8	00-946099-000G5	Bullnose Assy. (VHG75)	1
9	00-944267	Screw 6-32 x 13/16 Phil. Pan Hd.	4
10	00-419317	Terminal - Stationary	1
11	SC-018-55	Mach. Screw 4-40 x 1/2 Phil. Pan Hd.	2
12	00-946096-000G1	Box - Control Panel (VHG50)	1
12	00-946096-000G2	Box - Control Panel (VHG75)	1
13	00-428906-00004	Overlay (USB Port)	1
14	00-959000-000G1	Cable Assy. (USB) (1 Ft.)	1
15	00-427755-000G1	Rocker Switch Assy.	1
16	00-428906-00001	Overlay - Power	1
17	00-730534	Nut 10-24 Hex KEPS	4
18	00-946102-000G1	Plate - C/D-Control Mount (VHG50)	1
18	00-946102-000G2	Plate - C/D-Control Mount (VHG75)	1
19	00-730228	Self-Tapping Screw 10-24 x 1/2 Phil. Truss Hd.	2
20	00-976706-00009	Kit - C-Control (W/ Filtration) (1-18) (Incls. Controller & Overlay)	AR
20	00-976706-00010	Kit - C-Control (W/O Filtration) (1-18) (Incls. Controller & Overlay)	AR
20	00-976706-00011	Kit - C-Control (W/ Filtration) (1-9) (Incls. Controller & Overlay)	AR
20	00-976706-00012	Kit - C-Control (W/O Filtration) (1-9) (Incls. Controller & Overlay)	AR
20	00-976706-00013	Kit - C-Control (W/ Filtration) (1-6) (Incls. Controller & Overlay)	AR
20	00-976706-00014	Kit - C-Control (W/O Filtration) (1-6) (Incls. Controller & Overlay)	AR
20	00-976706-00001	Overlay (W/ Filtration) (1–18)	1
20	00-976706-00002	Overlay (W/O Filtration) (1–18)	1
20	00-976706-00003	Overlay (W/ Filtration) (1–9)	1
20	00-976706-00004	Overlay (W/O Filtration) (1–9)	1
20	00-976706-00005	Overlay (W/ Filtration) (1–6)	1
20	00-976706-00006	Overlay (W/O Filtration) (1–6)	1
21	00-976705-00005	Kit - D-Control (W/ Filtration) (Incls. Controller & Overlay)	AR
21	00-976705-00006	Kit - D-Control (W/O Filtration) (Incls. Controller & Overlay)	AR
21	00-976705-00001	Overlay (W/ Filtration) (D Control)	1
21	00-976705-00002	Overlay (W/O Filtration) (D Control)	1

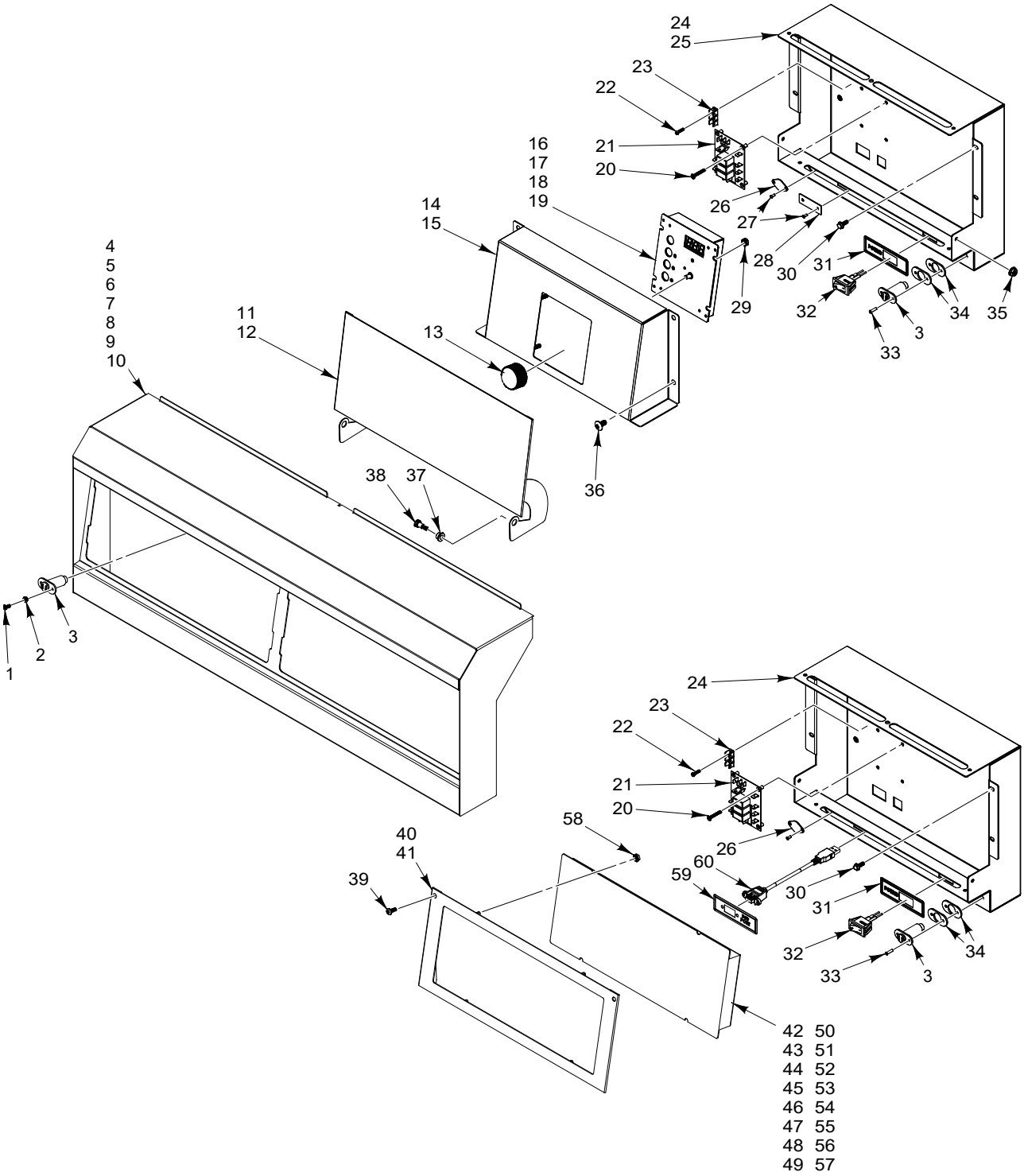

PL-61454

CONTROLS
(MULTIPLE)
(BEFORE S/N 65026221)

CONTROLS
(MULTIPLE)
(BEFORE S/N 65026221)

ILLUS. PL-32145	PART NO.	NAME OF PART	AMT.
1	00-730030	Mach. Screw 6-32 x 3/4 In.	2
2	NS-046-89	Nut Assy. 6-32 Hex KEPS	2
3	00-976750-00026	Magnet - Popper	3
4	00-976711-0AD45	Bullnose	1
5	00-976711-0AD45	Bullnose (Double) (VHG50)	1
6	00-976716-0AD75	Bullnose (Double) (VHG75)	1
7	00-976711-0AT45	Bullnose (Triple) (VHG50)	1
8	00-976716-0AT75	Bullnose (Triple) (VHG75)	1
9	00-976711-0AQ45	Bullnose (Quad) (VHG50)	1
10	00-976716-0AQ75	Bullnose (Quad) (VHG75)	1
11	00-976711-0004A	Door - Control Panel (VHG50)	1
12	00-976716-0004A	Door - Control Panel (VHG75)	1
13	00-976722-00004	Knob - Control	1
14	00-976711-0007A	Mount - Control Panel (VHG50) (A-Control)	1
15	00-976716-0007A	Mount - Control Panel (VHG75) (A-Control)	1
16	00-976722-00005	Kit - A-Control (W/ Filtration) (Incls. Controller, Overlay, & Knob)	1
17	00-976722-00006	Kit - A-Control (W/O Filtration) (Incls. Controller, Overlay, & Knob)	1
18	00-976722-00001	Overlay (A-Control) (W/ Filtration)	1
19	00-976722-00002	Overlay (A-Control) (W/O Filtration)	1
20	00-944267	Screw 6-32 x 13/16 Phil. Pan Hd.	8
21	00-427759-00003	Board - Interface	2
22	SC-018-55	Mach. Screw 4-40 x 1/2 Phil. Pan Hd.	4
23	00-419317	Terminal - Stationary	2
24	00-976711-00003	Box - Control Panel (VHG50)	2
25	00-976716-00003	Box - Control Panel (VHG75)	1
26	00-976750-00028	Magnet	2
27	RS-032-77	Rivet	6
28	00-959000-00003	Plate - Cover	1
29	00-730534	Nut 10-24 Hex KEPS	4
30	SD-032-07	Self-Tapping Screw 10-24 x 1/2 Hex. Hex Washer Hd., Type TT	8
31	00-428906-00001	Overlay - Power	2
32	00-427755-000G1	Rocker Switch Assy.	2
33		Rivet 1/8	4
34	00-976750-00027	Spacer - Magnet	4
35	NS-048-07	Lock Nut 10-24 Hex Special	2
36	00-723369	Mach. Screw 1/4-20 x 1/2 Phil. Truss Hd.	4
37	00-976750-00032	Bearing 1/4 In.	2
38	SC-132-86	Screw 10-24, 1/4 x 5/16	2
39	00-730228	Self-Tapping Screw 10-24 x 1/2 Phil. Truss Hd.	2
40	00-976711-004CD	Plate - Control Mount (VHG50) (C/D-Control)	1
41	00-976716-004CD	Plate - Control Mount (VHG75) (C/D-Control)	1
42	00-976705-00005	Kit - D-Control (W/ Filtration) (Incls. Controller & Overlay)	1
43	00-976705-00006	Kit - D-Control (W/O Filtration) (Incls. Controller & Overlay)	1
44	00-976705-00001	Overlay (W/ Filtration) (D Control)	1
45	00-976705-00002	Overlay (W/O Filtration) (D Control)	1
46	00-976706-00009	Kit - C-Control (W/ Filtration) (1-18) (Incls. Controller & Overlay)	1
47	00-976706-00010	Kit - C-Control (W/O Filtration) (1-18) (Incls. Controller & Overlay)	1
48	00-976706-00011	Kit - C-Control (W/ Filtration) (1-9) (Incls. Controller & Overlay)	1
49	00-976706-00012	Kit - C-Control (W/O Filtration) (1-9) (Incls. Controller & Overlay)	1
50	00-976706-00013	Kit - C-Control (W/ Filtration) (1-6) (Incls. Controller & Overlay)	1
51	00-976706-00014	Kit - C-Control (W/O Filtration) (1-6) (Incls. Controller & Overlay)	1
52	00-976706-00001	Overlay (W/ Filtration) (1-18) (C Control)	1
53	00-976706-00002	Overlay (W/O Filtration) (1-18) (C Control)	1
54	00-976706-00003	Overlay (W/ Filtration) (1-9) (C Control)	1
55	00-976706-00004	Overlay (W/O Filtration) (1-9) (C Control)	1
56	00-976706-00005	Overlay (W/ Filtration) (1-6) (C Control)	1

CONTROLS
(MULTIPLE)
(BEFORE S/N 65026221)

ILLUS. PL-32145	PART NO.	NAME OF PART	AMT.
57	00-976706-00006	Overlay (W/O Filtration) (1-6) (C Control)	1
58	00-730534	Nut 10-24 Hex KEPS	4
59	00-428906-00004	Overlay (USB Port)	1
60	00-959000-000G1	Cable Assy. (USB) (1 Ft.)	1

NOTES

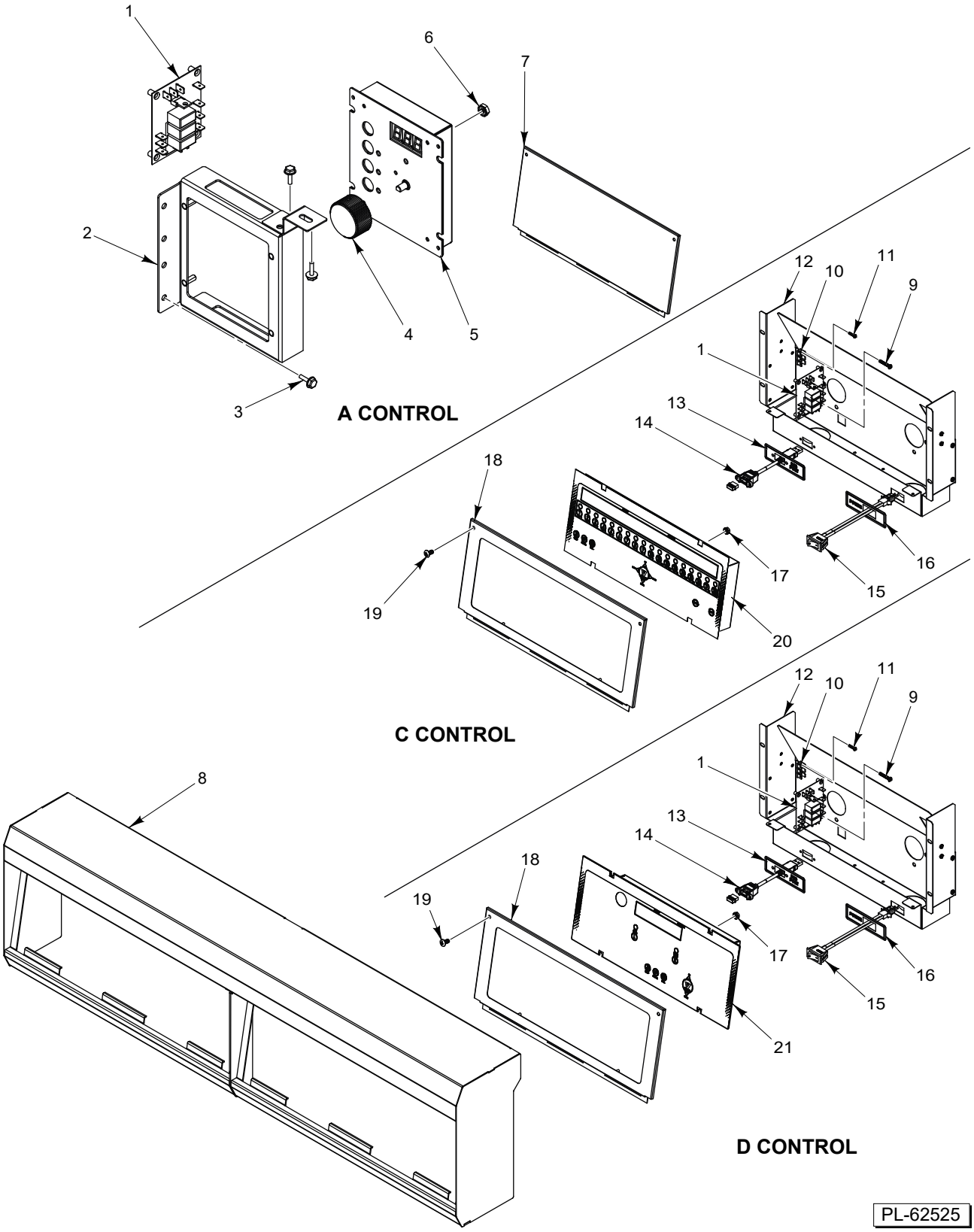

CONTROLS
(MULTIPLE)
(STARTING S/N 65026221)

CONTROLS
(MULTIPLE)
(STARTING S/N 65026221)

ILLUS. PL-62525	PART NO.	NAME OF PART	AMT.
1	00-427759-00003	Board - Interface	1
2	00-976722-00008	Bracket - A-Control Mount	1
3	SD-032-07	Self-Tapping Screw 10-24 x 1/2 Hex. Hex Washer Hd., Type TT	AR
4	00-976722-00004	Knob - Control	1
5	00-976722-00005	Kit - A-Control (W/ Filtration) (Incls. Controller, Overlay, & Knob)	AR
5	00-976722-00006	Kit - A-Control (W/O Filtration) (Incls. Controller, Overlay, & Knob)	AR
5	00-976722-00001	Overlay (A-Control) (W/ Filtration)	1
5	00-976722-00002	Overlay (A-Control) (W/O Filtration)	1
6	00-730534	Nut 10-24 Hex KEPS	4
7	00-946103-00003	Plate - A-Control Cover (VHG50)	AR
7	00-946103-00004	Plate - A-Control Cover (VHG75)	AR
8	00-946099-000G2	Bullnose Assy. (Double) (VHG50)	1
8	00-946099-000G6	Bullnose Assy. (Double) (VHG75)	1
8	00-946099-000G3	Bullnose Assy. (Triple) (VHG50)	1
8	00-946099-000G7	Bullnose Assy. (Triple) (VHG75)	1
8	00-946099-000G4	Bullnose Assy. (Quad) (VHG50)	1
8	00-946099-000G8	Bullnose Assy. (Quad) (VHG75)	1
9	00-944267	Screw 6-32 x 13/16 Phil. Pan Hd.	4
10	00-419317	Terminal - Stationary	1
11	SC-018-55	Mach. Screw 4-40 x 1/2 Phil. Pan Hd.	2
12	00-946096-000G1	Box - Control Panel (VHG50)	AR
12	00-946096-000G2	Box - Control Panel (VHG75)	AR
13	00-428906-00004	Overlay (USB Port)	1
14	00-959000-000G1	Cable Assy. (USB) (1 Ft.)	1
15	00-427755-000G1	Rocker Switch Assy.	1
16	00-428906-00001	Overlay - Power	1
17	00-730534	Nut 10-24 Hex KEPS	4
18	00-946102-000G1	Plate - C/D-Control Mount (VHG50)	1
18	00-946102-000G2	Plate - C/D-Control Mount (VHG75)	1
19	00-730228	Self-Tapping Screw 10-24 x 1/2 Phil. Truss Hd.	2
20	00-976706-00009	Kit - C-Control (W/ Filtration) (1-18) (Incls. Controller & Overlay)	AR
20	00-976706-00010	Kit - C-Control (W/O Filtration) (1-18) (Incls. Controller & Overlay)	AR
20	00-976706-00011	Kit - C-Control (W/ Filtration) (1-9) (Incls. Controller & Overlay)	AR
20	00-976706-00012	Kit - C-Control (W/O Filtration) (1-9) (Incls. Controller & Overlay)	AR
20	00-976706-00013	Kit - C-Control (W/ Filtration) (1-6) (Incls. Controller & Overlay)	AR
20	00-976706-00014	Kit - C-Control (W/O Filtration) (1-6) (Incls. Controller & Overlay)	AR
20	00-976706-00001	Overlay (W/ Filtration) (1–18)	1
20	00-976706-00002	Overlay (W/O Filtration) (1–18)	1
20	00-976706-00003	Overlay (W/ Filtration) (1–9)	1
20	00-976706-00004	Overlay (W/O Filtration) (1–9)	1
20	00-976706-00005	Overlay (W/ Filtration) (1–6)	1
20	00-976706-00006	Overlay (W/O Filtration) (1–6)	1
21	00-976705-00005	Kit - D-Control (W/ Filtration) (Incls. Controller & Overlay)	AR
21	00-976705-00006	Kit - D-Control (W/O Filtration) (Incls. Controller & Overlay)	AR
21	00-976705-00001	Overlay (W/ Filtration) (D Control)	1
21	00-976705-00002	Overlay (W/O Filtration) (D Control)	1

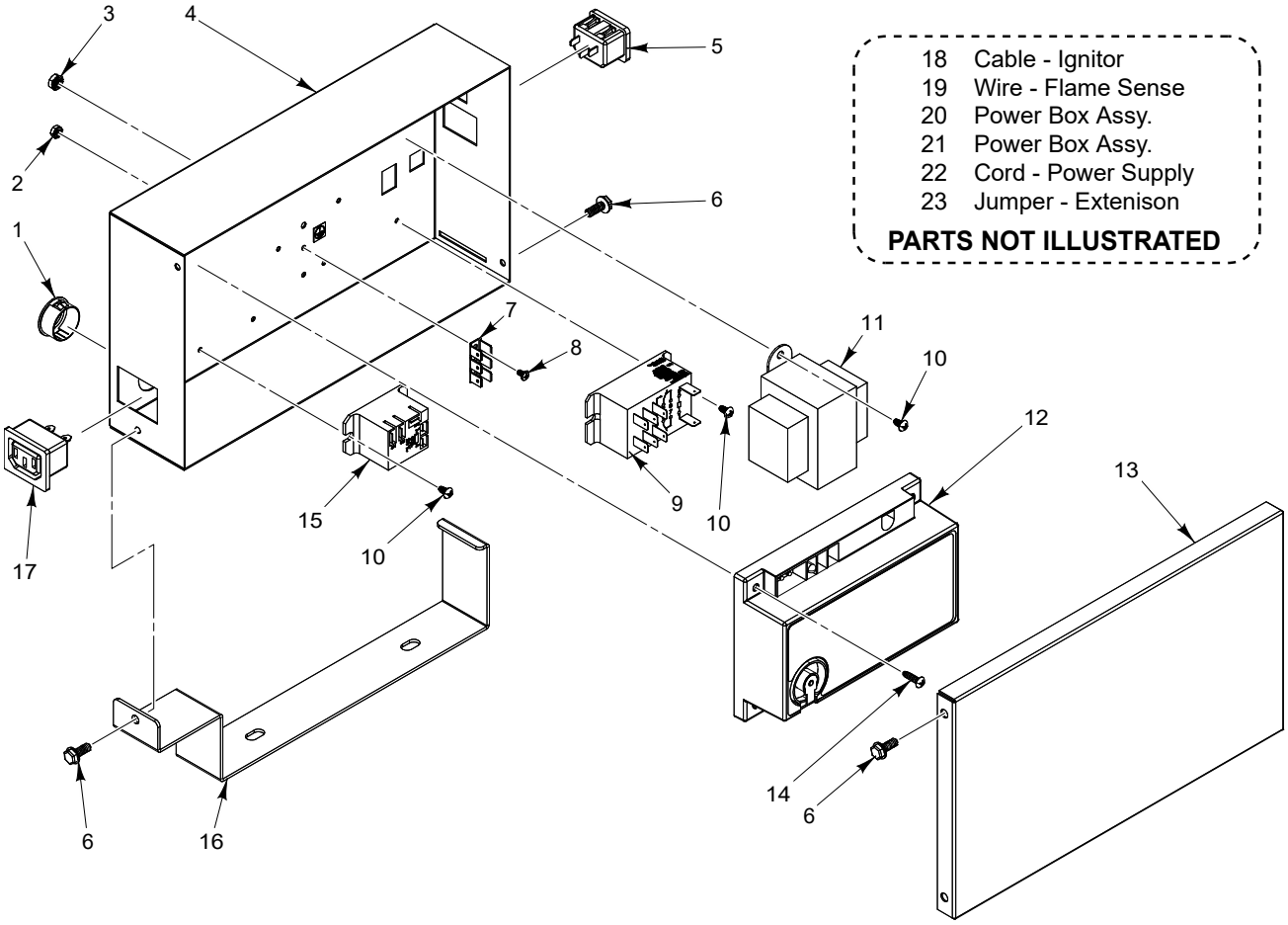

18	Cable - Ignitor
19	Wire - Flame Sense
20	Power Box Assy.
21	Power Box Assy.
22	Cord - Power Supply
23	Jumper - Extenison

PARTS NOT ILLUSTRATED

PL-61455

POWER BOX

POWER BOX

ILLUS. PL-61455	PART NO.	NAME OF PART	AMT.
1	FE-023-56	Bushing - Electric Snap	1
2	00-90675A-00005	Nut	2
3	00-90675A-00007	Nut	1
4	00-428683-00006	Box - Power Supply	1
5	00-419971	Receptacle - Power (Male)	1
6	SD-036-80	Self-Tapping Screw 8-32 x 3/8 Hex Washer Hd., Type TT	4
7	00-419317	Terminal - Stationary	1
8	00-90272A-00105	Screw	2
9	00-428864-00001	Relay - Pump	1
10	00-90087A-00144	Screw	6
11	00-411500-00012	Transformer (120 VAC, 24 V., 40 VA) (W/ Plug Assy.)	1
12	00-857207-00004	Module - Ignitor	1
13	00-428684-00003	Lid - Power Supply	1
14	00-90087A-00148	Screw	4
15	00-497125-00001	Relay - Fill Valve (SPDT, 24 VAC)	1
16	00-428688-00002	Bracket - Power Supply	1
17	00-419970	Receptacle - Power (Female)	1
18	00-976743-00001	Cable - Ignitor	1
19	00-976743-00002	Wire - Flame Sense	1
20	00-428685-00010	Power Box Assy. (W/ Filtration) (Incls. Items 1 thru 17)	1
21	00-428685-00011	Power Box Assy. (W/O Filtration) (Incls. Items 1 thru 8, 10 thru 14, 16, & 17)	1
22	00-419967-00005	Cord - Power Supply (84 In.)	1
23	00-419967-00003	Jumper - Extension (24-1/2 In.)	1

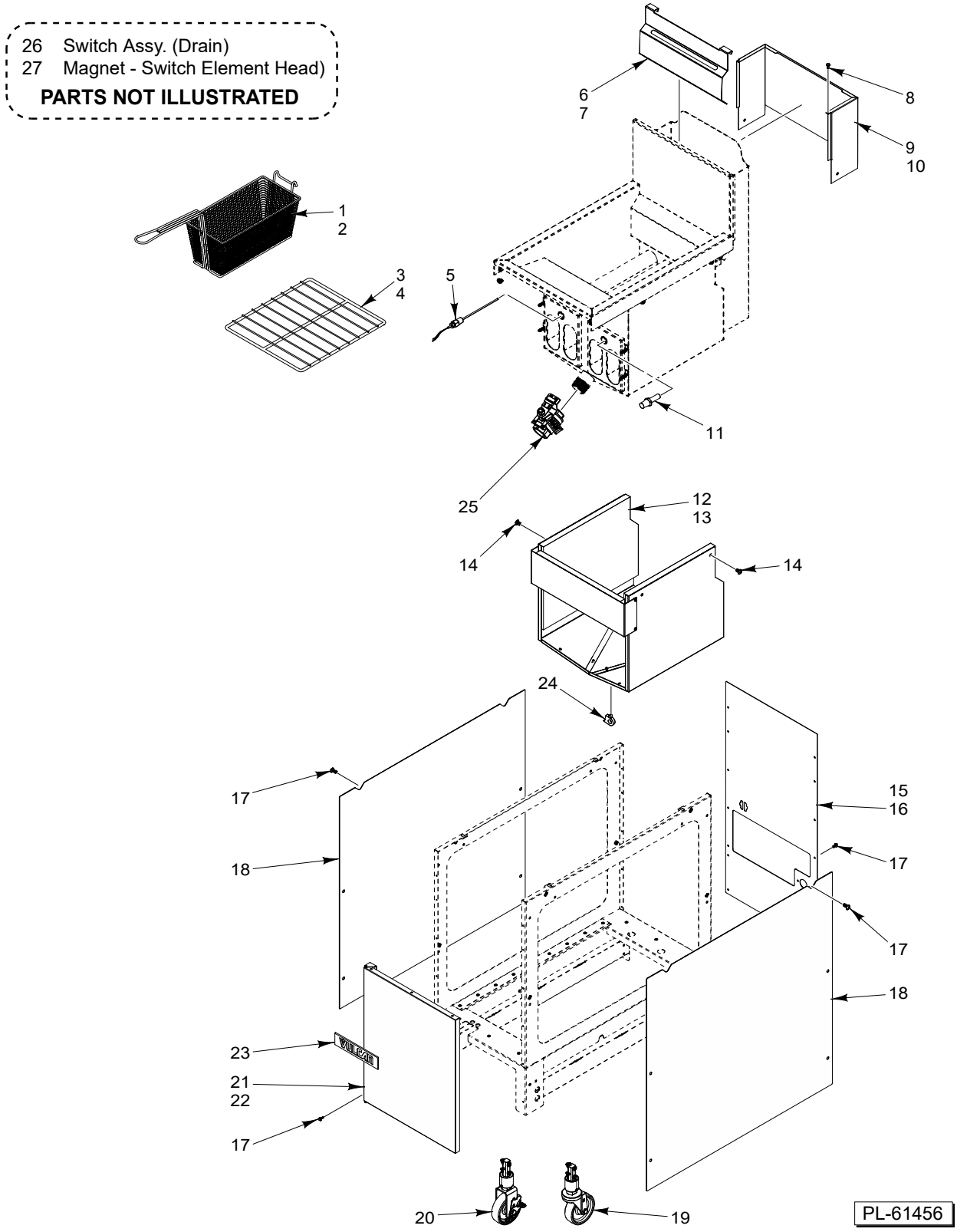

PANELS
(BEFORE S/N 65026221)

PANELS
(BEFORE S/N 65026221)

ILLUS. PL-61456	PART NO.	NAME OF PART	AMT.
1	00-499223-00001	Basket - Twin (VHG50)	2
2	00-499223-00002	Basket - Twin (VHG75)	2
3	00-976731-00050	Rack - Basket (VHG50)	1
4	00-976731-00075	Rack - Basket (VHG75)	1
5	00-976730-00001	Probe - Temp.	1
6	00-417056-00002	Hanger - Basket (VHG50)	1
7	00-418321-00002	Hanger - Basket (VHG75)	1
8	SD-036-80	Self-Tapping Screw 8-32 x 3/8 Hex Washer Hd., Type TT	2
9	00-976709-00018	Panel - Back (VHG50)	1
10	00-976713-00018	Panel - Back (VHG75)	1
11	00-976588	Control - High Limit	1
12	00-976709-19KIT	Kit - Insulation, Tank (Incls. Insulation & Retainer) (VHG50)	1
13	00-976713-19KIT	Kit - Insulation, Tank (Incls. Insulation & Retainer) (VHG75)	1
14	00-723369	Mach. Screw 1/4-20 x 1/2 Phil. Truss Hd.	4
15	00-976709-00016	Panel - Back (VHG50)	1
16	00-976713-00016	Panel - Back (VHG75)	1
17	SD-032-07	Self-Tapping Screw 10-24 x 1/2 Hex. Hex Washer Hd., Type TT	AR
18	00-976700-00002	Panel - Side	2
19	00-976714-00002	Caster (Swivel)	2
20	00-976714-00001	Caster (Fixed)	2
21	00-976717-00050	Door (VHG50)	1
22	00-976717-00075	Door (VHG75)	1
23	00-957916-00005	Nameplate - Vulcan	1
24	00-976721-00009	Clip - Wire Harness	4
25	00-976656-00002	Valve - Drain Assy. (Incls. Items 29 & 30)	1
26	00-426805-000G1	Switch Assy. (Drain)	1
27	00-426801-00002	Magnet - Switch Element Head	1

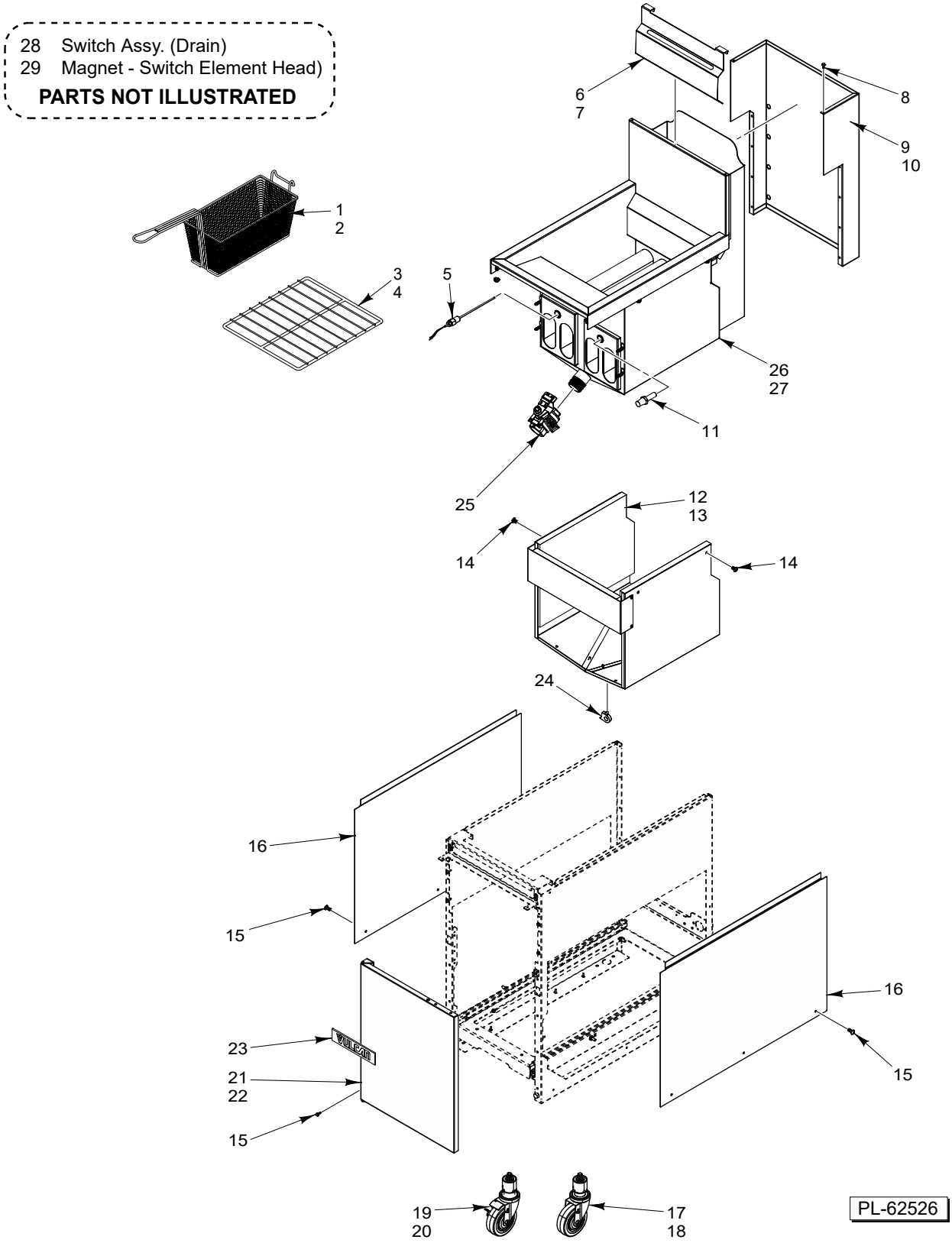

PANELS
(STARTING S/N 65026221)

PANELS
(STARTING S/N 65026221)

ILLUS. PL-62526	PART NO.	NAME OF PART	AMT.
1	00-499223-00001	Basket - Twin	2
2	00-499223-00002	Basket - Twin	2
3	00-976731-00050	Rack – Basket (VHG50)	1
4	00-976731-00075	Rack – Basket (VHG75)	1
5	00-976730-00001	Probe – Temp.	1
6	00-417056-00002	Hanger – Basket (VHG50)	1
7	00-418321-00002	Hanger – Basket (VHG75)	1
8	SD-036-80	Self-Tapping Screw B-32 × 3/8 Hex Washer Hd., Type TT	2
9	00-946098-00001	Panel - Back Flue Cover (VHG50)	1
10	00-946098-00002	Panel - Back Flue Cover (VHG75)	1
11	00-976588	Control – High Limit	1
12	00-976709-19KIT	Kit – Insulation, Tank (VHG50) (Incl. Insulation & Retainer)	1
13	00-976713-19KIT	Kit – Insulation, Tank (VHG75) (Incl. Insulation & Retainer)	1
14	00-723369	Mach. Screw 1/4-20 × 1/2 Phil. Truss Hd.	4
15	SD-032-07	Self-Tapping Screw 10-24 × 1/2 Hex. Hex Washer Hd., Type TT	AR
16	00-976977	Panel - Side	2
17	00-959832-00003	Caster - Screw-In Mount	AR
18	00-421893-00002	Caster - Plate Mount	AR
19	00-959832-00001	Caster - Screw-In Mount	AR
20	00-421893-00001	Caster - Plate Mount	AR
21	00-946086-000G1	Reversible Door Assy. (VHG50)	1
22	00-946086-000G2	Reversible Door Assy. (VHG75)	1
23	00-957916-00005	Nameplate – Vulcan	1
24	00-976721-00009	Clip – Wire Harness	4
25	00-976656-00002	Valve - Drain Assy.	1
26	00-976709-0000A	Tank Assy. (VHG50)	AR
27	00-976713-0000A	Tank Assy. (VHG75)	AR
28	00-426805-00091	Switch Assy. (Drain)	1
29	00-426801-00002	Magnet – Switch Element Head	1

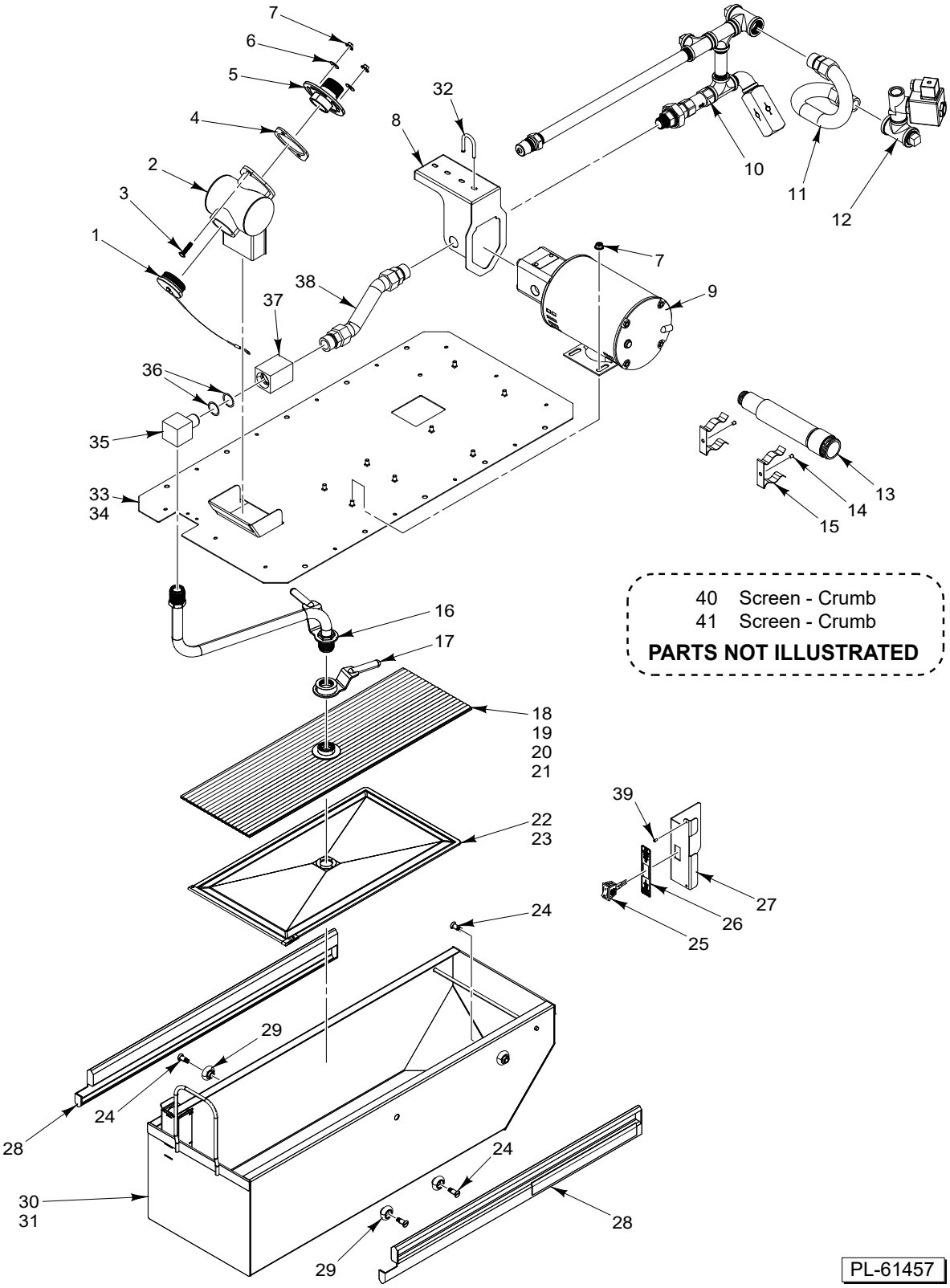

FILTRATION
(SINGLE)
(BEFORE S/N 65026221)

FILTRATION
(SINGLE)
(BEFORE S/N 65026221)

ILLUS. PL-61457	PART NO.	NAME OF PART	AMT.
1	00-497571-000G2	Plug - Drain	1
2	00-976518-00023	Pipe - Drain	1
3	SC-132-93	Carriage Bolt 1/4-20 x 1-1/4 In.	2
4	00-420553-00003	Gasket - Silicone	1
5	00-976693-00001	Drain Flange	1
6	WS-031-25	Washer	3
7	NS-038-08	Lock Nut 1/4-20 Flange	AR
8	00-976707-00042	Mount - Piping	1
9	00-417792-00008	Pump Motor Assy. (115/230 V., 60 Hz.) (8 G.P.M.)	1
10	00-976707-00046	Filtration Piping	1
11	00-426602-00005	Tube - Flex 23 In.	1
12	00-976707-00049	Valve Assy.	1
13	00-497572-000G3	Pipe - Boil Out Bypass	1
14	RS-033-04	Rivet - Pop	2
15	00-417039-00002	Clip - Drain Pipe	2
16	00-956901-00001	Tube - Suction	1
17	00-976707-00041	Nut - Handle	1
18	00-499085-00009	Insert - Screen (SST) (VHG50)	1
19	00-499085-00008	Insert - Envelope (Fabric) (VHG50)	1
20	00-499085-00010	Insert - Screen (SST) (VHG75)	1
21	00-499085-00011	Insert - Envelope (Fabric) (VHG75)	1
22	00-499087-00008	Filter - Screen (SST) (VHG50)	1
23	00-499087-00009	Filter - Screen (SST) (VHG75)	1
24	00-976708-00003	Stud	8
25	00-427755-000G1	Rocker Switch Assy.	1
26	00-428906-00003	Overlay (Rinse/Fill/Discharge)	1
27	00-976707-00051	Mount - Switch	1
28	00-976708-00001	Slide (Set of 2)	1
29	00-976708-00002	Bearing	8
30	00-976707-00001	Pan - Filter (VHG50)	1
31	00-976707-00009	Pan - Filter (VHG75)	1
32	00-521820	U-Bolt	1
33	00-976715-0000A	Mount - Filtration (VHG50)	1
34	00-976720-0000A	Mount - Filtration (VHG75)	1
35	00-426567-00007	Block - Suction , Male	1
36	00-426567-00008	O-Ring	2
37	00-426567-00006	Block - Suction	1
38	00-426602-00007	Tube - Flex 8 In.	1
39	00-719874	Rivet - Pop	AR
40	00-976707-00052	Screen - Crumb (VHG50)	1
41	00-976707-00060	Screen - Crumb (VHG75)	1

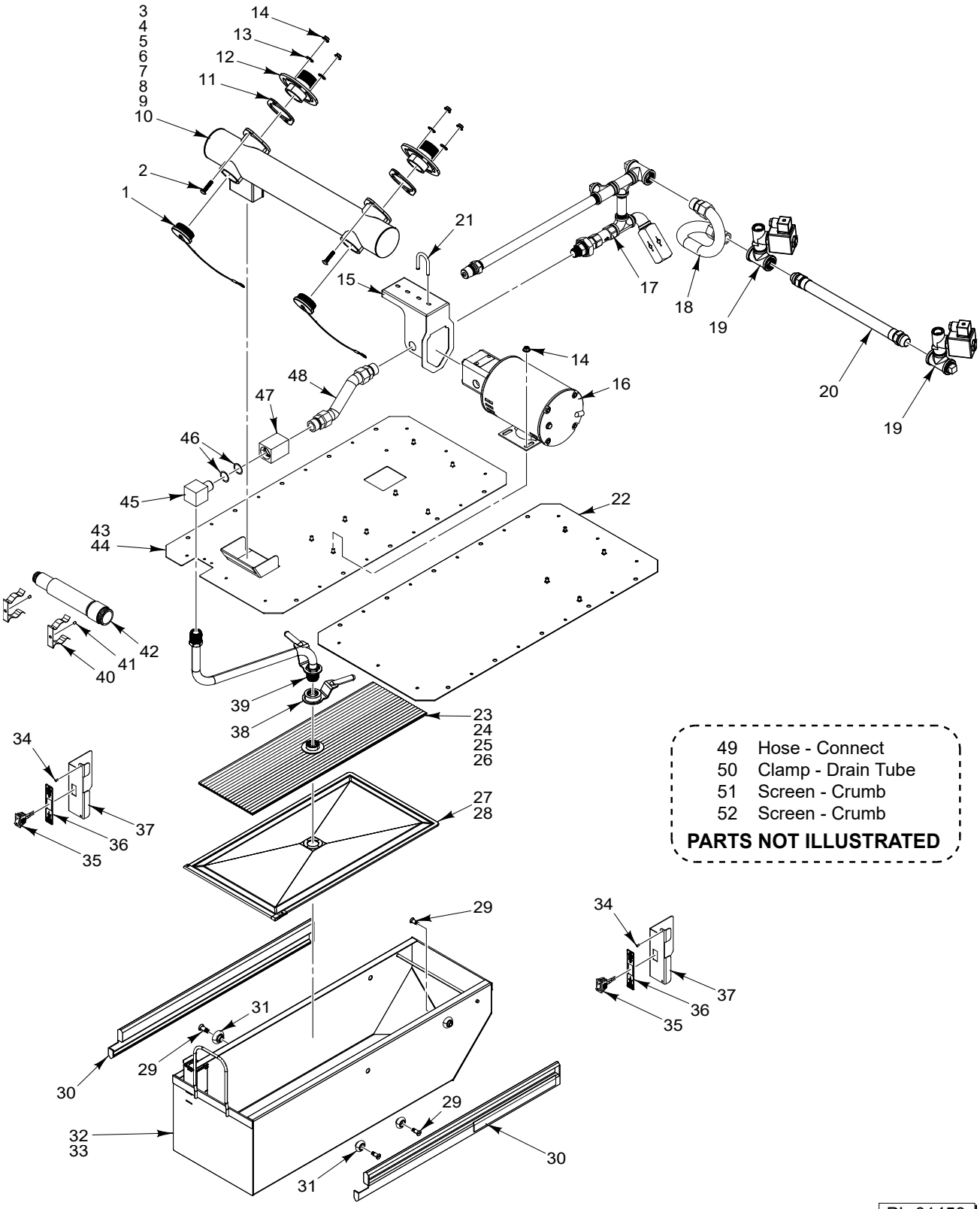

49	Hose - Connect
50	Clamp - Drain Tube
51	Screen - Crumb
52	Screen - Crumb

PARTS NOT ILLUSTRATED

PL-61458

FILTRATION
(MULTIPLE)
(BEFORE S/N 65026221)

FILTRATION
(MULTIPLE)
(BEFORE S/N 65026221)

ILLUS. PL-61458	PART NO.	NAME OF PART	AMT.
1	00-497571-000G2	Plug - Drain	1
2	SC-132-93	Carriage Bolt 1/4-20 x 1-1/4 In.	4
3	00-976518-00A5V	Pipe - Drain (2 Batteries) (VHG50)	1
4	00-976719-00A5V	Pipe - Drain (2 Batteries) (VHG75)	1
5	00-976518-00015	Pipe - Drain (3 Batteries) (Center) (VHG50)	1
6	00-976518-00013	Pipe - Drain (3 Batteries) (End) (VHG50)	1
7	00-976719-00015	Pipe - Drain (3 Batteries) (Center) (VHG75)	1
8	00-976719-00013	Pipe - Drain (3 Batteries) (End) (VHG75)	1
9	00-976518-00014	Pipe - Drain (4 Batteries) (Center) (VHG50)	1
10	00-976719-00014	Pipe - Drain (4 Batteries) (Center) (VHG75)	1
11	00-420553-00003	Gasket - Silicone	2
12	00-976693-00001	Drain Flange	2
13	WS-031-25	Washer	4
14	NS-038-08	Lock Nut 1/4-20 Flange	AR
15	00-976707-00042	Mount - Piping	1
16	00-417792-00008	Pump Motor Assy. (115/230 V., 60 Hz.) (8 G.P.M.)	1
17	00-976707-00046	Filtration Piping	1
18	00-426602-00005	Tube - Flex 23 In.	1
19	00-976707-00049	Valve Assy.	2
20	00-426602-00006	Tube - Flex 18 In.	1
21	00-521820	U-Bolt	1
22	00-976732-0000A	Floor Pan	1
23	00-499085-00009	Insert - Screen (SST) (VHG50)	1
24	00-499085-00008	Insert - Envelope (Fabric) (VHG50)	1
25	00-499085-00010	Insert - Screen (SST) (VHG75)	1
26	00-499085-00011	Insert - Envelope (Fabric) (VHG75)	1
27	00-499087-00008	Filter - Screen (SST) (VHG50)	1
28	00-499087-00009	Filter - Screen (SST) (VHG75)	1
29	00-976708-00003	Stud	8
30	00-976708-00001	Slide (Set of 2)	1
31	00-976708-00002	Bearing	8
32	00-976707-00001	Pan - Filter (VHG50)	1
33	00-976707-00009	Pan - Filter (VHG75)	1
34	00-719874	Rivet - Pop	4
35	00-427755-000G1	Rocker Switch Assy.	2
36	00-428906-00003	Overlay (Rinse/Fill/Discharge)	2
37	00-976707-00051	Mount - Switch	2
38	00-976707-00041	Nut - Handle	1
39	00-956901-00001	Tube - Suction	1
40	00-417039-00002	Clip - Drain Pipe	2
41	RS-033-04	Rivet - Pop	2
42	00-497572-000G3	Pipe - Boil Out Bypass	1
43	00-976715-0000A	Mount - Filtration (VHG50)	1
44	00-976720-0000A	Mount - Filtration (VHG75)	1
45	00-426567-00007	Block - Suction , Male	1
46	00-426567-00008	O-Ring	2
47	00-426567-00006	Block - Suction	1
48	00-426602-00007	Tube - Flex 8 In.	1
49	00-419351-00002	Hose - Connect	AR
50	00-497409-00002	Clamp - Drain Tube (3 In.)	AR
51	00-976707-00052	Screen - Crumb (VHG50)	AR
52	00-976707-00060	Screen - Crumb (VHG75)	AR

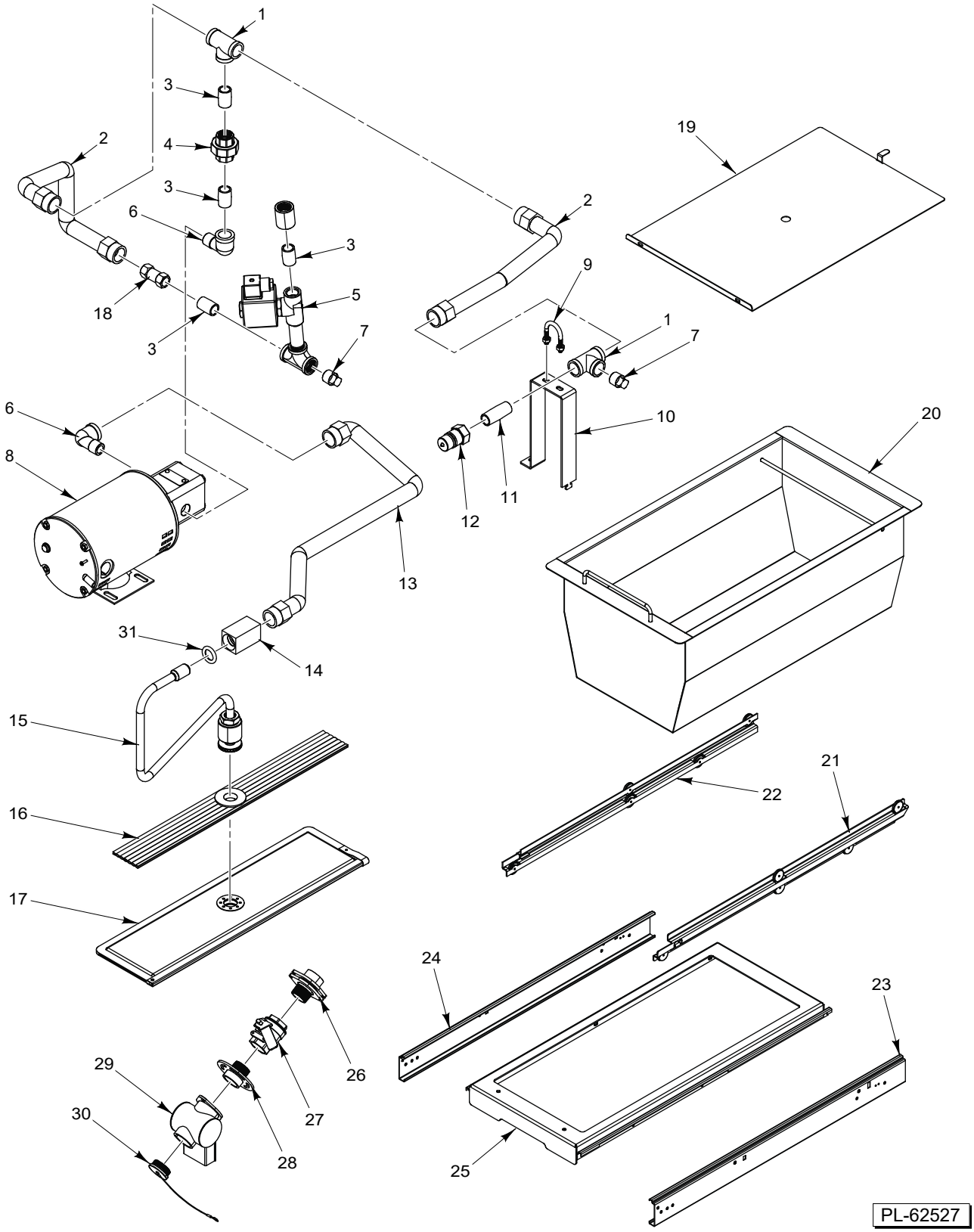

FILTRATION
(STARTING S/N 65026221)

FILTRATION
(STARTING S/N 65026221)

ILLUS. PL-62527	PART NO.	NAME OF PART	AMT.
1	FP 019-25	Tee, 1/2 x 1/2 x 1/2 NPT	2
2	00-426602-00001	Tube - Flex (12 In.)	AR
3	FP-035-91	Pipe 1/2 x 1-1/8 TBE	3
4	00-946121	304 Stainless Steel 1/2" UNION	1
5	00-946120-00001	Tank Valve Assy.	1
6	FP-013-17	Elbow - Street 1/2 x 90 Deg.	2
7	FP-028-14	PLUG,PIPE 1/2	2
8	00-417792-00009	Pump/Motor Assembly	1
9	00-521820	U-Bolt	1
10	00-956905-00005	Standoff, Oil Return VHG50	1
10	00-956905-00006	Standoff, Oil Return VHG70	1
11	FP-035-95	Pipe 1/2 x 2 TBE	1
12	00-418781-00001	DISCONNECT,MALE	1
13	00-426602-00004	Tube - Flex (19 In.) (VHG50)	1
13	00-426602-00008	25 In. Flex Tube (VHG70)	1
14	00-946035-00005	Receptacle - Oil Suction (Single O-Ring Design)	1
15	00-976998-000G9	Suction Tube Assy. (VHG50)	1
15	00-976998-00G13	Suction Tube Assy. (VHG70)	1
16	00-499085-00003	Insert - Filter Screen (2-1/4 x 19 In.) (VHG50)	1
16	00-499085-00007	Insert - Filter Screen (7-3/4 x 19 In.) (VHG70)	1
17	00-499087-00004	Screen - Fine Mesh Filter (Metal) (22 x 10-1/2 In.) (VHG50)	1
17	00-499087-00002	Screen - Fine Mesh Filter (Metal) (22 x 5 In.) (VHG70)	1
18	00-418786-00001	VALVE,CHECK BALL	1
19	00-956904-00001	Splash Guard (11 x 22 In.) (VHG50)	1
19	00-956904-00002	Splash Guard (16-1/2 x 22 In.) (VHG70)	1
20	00-946089-00G15	Pan Filter Assy. (VHG50)	1
20	00-946089-00G17	Pan Filter Assy. (VHG70)	1
21	00-958026-00012	Drawer Rail (LH)	1
22	00-958026-00009	Drawer Rail (RH)	1
23	00-958026-00010	Guide (LH)	1
24	00-958026-00007	Guide (RH)	1
25	00-956907-00003	Counter - Top (VHG50)	1
25	00-946091-00006	Counter - Top (VHG70)	1
26	00-976985-00001	Flange - Ball Valve	AR
27	00-976656-00002	Valve - Drain Assy.	AR
28	00-976693-00004	Drain Nipple Assy.	AR
29	00-976518-00023	Pipe - Drain	AR
29	00-976938-0001A	Common Drain Manifold Assy.	AR
29	00-976938-0245A	Pipe - Drain 45 (2 Batt)	AR
29	00-976938-0265A	Pipe - Drain 65 (2 Batt)	AR
29	00-976938-0445A	Pipe - Drain 45 (4 Batt)	AR
29	00-976938-0465A	Pipe - Drain 65 (4 Batt)	AR
30	00-497571-000G2	Plug - Drain	AR
31	00-946036	O-Ring (For Single O-Ring Receptacle)	1

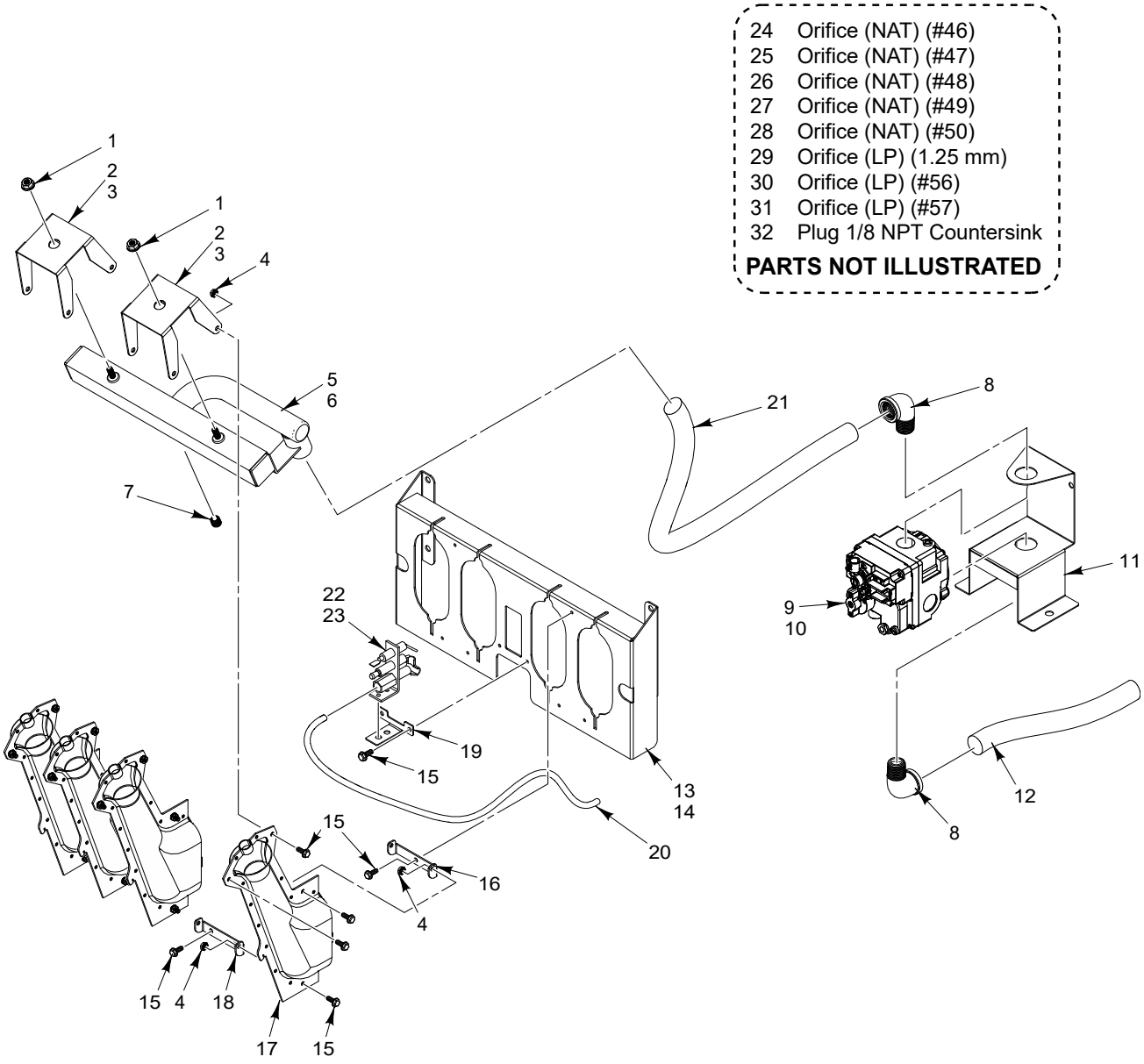

PL-61459

COMBUSTION

COMBUSTION

ILLUS. PL-61459	PART NO.	NAME OF PART	AMT.
1	NS-038-08	Lock Nut 1/4-20 Flange	6
2	00-976729-00001	Bracket - Burner Manifold (VHG50)	2
3	00-976729-00002	Bracket - Burner Manifold (VHG75)	2
4	NS-044-07	Nut Assy. 8-32 Hex KEPS	AR
5	00-976728-00001	Burner Manifold (VHG50)	1
6	00-976728-00002	Burner Manifold (VHG75)	AR
7	00-719363	Plug 1/8 NPT Countersink	2
8	FP-013-17	Elbow - Street 1/2 x 90 Deg.	2
9	00-410841-00028	Valve - Combination (NAT) (Electronic Ignition) (Before S/N 65026221)	1
9	00-976744-00001	Valve - Combination (NAT) (Electronic Ignition) (Starting S/N 65026221)	1
10	00-410841-00029	Valve - Combination (LP) (Electronic Ignition) (Before S/N 65026221)	1
10	00-976744-00002	Valve - Combination (LP) (Electronic Ignition) (Starting S/N 65026221)	1
11	00-976750-00023	Bracket - Gas Valve (Before S/N 65026221)	1
11	00-946117	Bracket - Gas Valve (Starting S/N 65026221)	1
12	00-427882-000G1	Gas Inlet	1
13	00-976750-00012	Bracket - Burner Mount (VHG50)	1
14	00-976753-00012	Bracker - Burner Mount (VHG75)	1
15	SD-036-80	Self-Tapping Screw 8-32 x 3/8 Hex Washer Hd., Type TT	AR
16	00-976750-00022	Bracket - Burner (1 Hole) (Before S/N 65026221)	2
17	00-976723	Burner	4
18	00-976750-00016	Bracket - Burner (2 Hole) (4 on VHG50, 8 on VHG70)	2
19	00-976735-00003	Bracket - Ignitor Mount	1
20	00-426505-00023	Tube - Flex 1/4 O.D. x 23 In. Lg.	1
21	00-427882-000G3	Tube - Flex (Gas Inlet)	1
22	00-976736	Ignitor - Sense Pilot (NAT)	1
23	00-976737	Ignitor - Sense Pilot (LP)	1
24	00-976754-00046	Orifice (NAT) (#46) (0-1999 Ft.)	AR
25	00-976754-00047	Orifice (NAT) (#47) (2000-3999 Ft.)	AR
26	00-976754-00048	Orifice (NAT) (#48) (4000-6999 Ft.)	AR
27	00-976754-00049	Orifice (NAT) (#49) (7000-8999 Ft.)	AR
28	00-976754-00050	Orifice (NAT) (#50) (9000+ Ft.)	AR
29	00-976754-125MM	Orifice (LP) (1.25 mm) (0-4999 Ft.)	AR
30	00-976754-00056	Orifice (LP) (#56) (5000-9999 Ft.)	AR
31	00-976754-00057	Orifice (LP) (#57) (10000+ Ft.)	AR
32	00-719363	Plug 1/8 NPT Countersink	1

1	Harness - Basket Lift
2	Harness - Filter Switch
3	Harness - Motor Pump
4	Harness - Gas Valve
5	Harness - Trans (40 VA, 120/24V.)
6	Harness - Main
7	Harness - Interface
8	Harness - Interface to DVI
9	Harness - D-Control Connector
10	Harness - C-Control Connector
11	Harness - Heat Trace (Before S/N 65026221)
12	Harness - Heat Trace (Starting S/N 65026221)
13	Harness - T Motor Pump
14	Heat Trace Easy Connect (120 V.)

PARTS NOT ILLUSTRATED

PL-61512

WIRE HARNESSES

WIRE HARNESSES

ILLUS. PL-61512	PART NO.	NAME OF PART	AMT.
1	00-976721-00013	Harness - Basket Lift	AR
2	00-976721-00002	Harness - Filter Switch	AR
3	00-976721-00006	Harness - Motor Pump	AR
4	00-976721-00005	Harness - Gas Valve	AR
5	00-976721-00009	Transformer (120VAC, 24 V, 40 VA) (480V)	AR
6	00-976721-00001	Harness - Main	AR
7	00-427753-00010	Harness - Interface	AR
8	00-427750-000G1	Harness (Interface to DVI)	AR
9	00-976705-00004	Harness - D-Control Connector	AR
10	00-976706-00008	Harness - C-Control Connector	AR
11	00-976721-00016	Harness - Heat Trace (Before S/N 65026221)	AR
12	00-976721-00018	Harness - Heat Trace (Starting S/N 65026221)	AR
13	00-976721-00007	Harness - T Motor Pump (Starting S/N 65026221)	AR
14	00-976721-00020	Heat Trace Easy Connect (120 V.) (Starting S/N 65026221)	AR

Item Number	Part Number	Part Description
1	00-946120-00001	Tank Valve Assy.
2	00-857207-00004	Module - Ignitor
3	00-976736	Ignitor - Sense Pilot (NAT)
4	00-976744-00001	Valve - Combination (NAT) (Electronic Ignition)
5	00-976744-00002	Valve - Combination (LP) (Electronic Ignition)
6	00-497125-00004	Relay SPDT (24 V.)
7	00-428864-00001	Relay - Pump
8	00-427755-000G1	Rocker Switch Assy.
9	00-426805-000G1	Switch Assy.
10	00-418786-00001	Valve - Check
11	00-946036	O-Ring (For Single O-Ring Receptacle)
12	00-976730-00001	Probe - Temp.
13	00-976588	Control - High Limit
14	00-427759-00003	Board - Interface
15	00-419967-00005	Cord - Power Supply (84 In.)
16	00-419967-00003	Jumper - Extension (24-1/2 In.)
17	00-427755-000G1	Rocker Switch Assy.

PL-62528

RECOMMENDED SPARE PARTS LIST

RECOMMENDED SPARE PARTS LIST

ILLUS. PL-62528	PART NO.	NAME OF PART	AMT.
1	00-946120-00001	Tank Valve Assy.	1
2	00-857207-00004	Module - Ignitor	1
3	00-976736	Ignitor - Sense Pilot (NAT)	1
4	00-976744-00001	Valve - Combination (NAT) (Electronic Ignition)	1
5	00-976744-00002	Valve - Combination (LP) (Electronic Ignition)	1
6	00-497125-00004	Relay SPDT (24 V.)	1
7	00-428864-00001	Relay - Pump	1
8	00-427755-000G1	Rocker Switch Assy.	1
9	00-426805-000G1	Switch Assy.	1
10	00-418786-00001	Valve - Check	1
11	00-946036	O-Ring (For Single O-Ring Receptacle)	1
12	00-976730-00001	Probe - Temp.	1
13	00-976588	Control - High Limit	1
14	00-427759-00003	Board - Interface	1
15	00-419967-00005	Cord - Power Supply (84 In.)	1
16	00-419967-00003	Jumper - Extension (24-1/2 In.)	1
17	00-427755-000G1	Rocker Switch Assy.	1