CAMBRO

Tray and Silver Cart

Model TC1418

Features & Benefits

StoreSafe

- Tailor-made for tray service. Neatly organizes trays and accessories for self-service, all in one compact unit.
- Ample storage for trays, flatware, napkins and condiments. Four each, GN 1/3 and 1/6, 4" (10 cm) deep, clear food pans (Cambro Product Codes 34CW and 64CW) are included for the eight built-in, self-service compartments.
- Maximum tray capacity (2 stacks each per cart):

  Approx. 180 - 200 14" x 18" (35,6 x 46 cm) trays.
- Made of single-molded, seamless, double wall, high-density polyethylene construction.
- Easy to clean, and impact resistant. Won't rust, peel, crack or dent.
- Foamed-in polyurethane insulation adds structural strength and reduces noise.
- Rounded corners help protect walls.
- Four each, 6" (15,2 cm) swivel casters, 2 w/ brakes, provide easy maneuvering.
- Convenient vinyl cover included for added protection and more sanitary storage. Cover is not NSF listed.
- No assembly required.
- Available in 6 colors.

Item No. _____

Specifier Identification No. _____

Model No. _____

Quantity _____



TC1418



TC1418
(Shown with Vinyl Cover)

Approvals

NSF

© 2008 Cambro Manufacturing Company 5801 Skylab Road, Huntington Beach, California 92647-2056-U.S.A.
Telephone (1)714 848 1555 **Toll Free** 800 854 7631 **Customer Service** 800 833 3003

Tray and Silver Cart

Model TC1418

Item No. _____

Specifier Identification No. _____

Model No. _____

Quantity _____

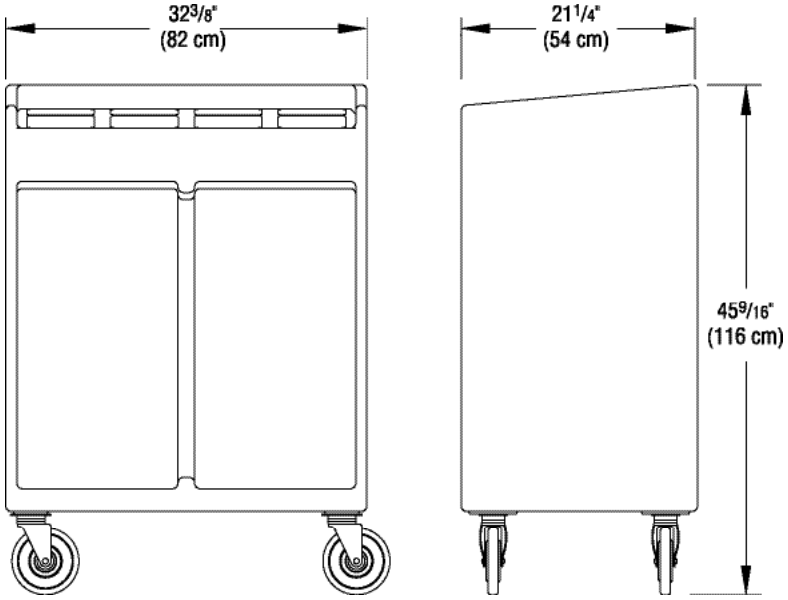

TC1418

Specifications

Dimension Tolerance: +/-1/4" (0,64 cm)

Code	Description	Max. Tray Size	Max. Tray Capacity	Max. Load Capacity	Dimensions W x D x H	Case lbs./cube Kg/m³
TC1418	Tray & Silver Cart	14" x 18" (35,6 x 46 cm)	180-200 in two stacks	500 lbs. (227 Kg.)	32⅜" x 21¼" x 45⁹⁄₁₆" (82 x 54x 116 cm)	84 (19.46) 38 (0,55)

Optional Accessories

Replacement Vinyl Cover ❑ TC1418C

* Note: Vinyl Cover is not NSF listed.

Standard Colors

❑ Slate Blue (401) ❑ Dark Brown (131) ❑ Coffee Beige (157)

❑ Gray (180) ❑ Granite Green (192) ❑ Granite Gray (191)

Architect Specs

The Tray and Silver Cart shall be Cambro Model TC1418 manufactured by Cambro Mfg. Co., Huntington Beach, CA 92648 U.S.A. It shall be single-molded, seamless, double-wall, high density polyethylene and foam injected polyurethane. It shall have rounded corners to help protect walls. It shall include 4 each GN 1/3 and 1/6, 4" (10 cm) deep, clear food pans. It shall have four each 6" (15,2 cm) swivel casters, 2 w/ brakes, with 1¼" (3,2 cm) wide tread, mounted on impact plates. It shall have a vinyl cover included for added protection and sanitary storage and shall be available in 6 colors.

Approvals

NSF

CAMBRO MANUFACTURING COMPANY
http://www.cambro.com

© 2008 Cambro Manufacturing Company 5801 Skylab Road, Huntington Beach, California 92647-2056-U.S.A.
Telephone (1)714 848 1555 **Toll Free** 800 854 7631 **Customer Service** 800 833 3003 Printed in USA