OWNER'S MANUAL

CamKiosk®

This manual applies to the following Camkiosk Models:

KVC854	KVC856
KVC854C	KVC856C
KVC854U	KVC856U

Congratulations on the purchase of your new Camkiosk. This Owner's Manuals provides you with a step by step guide to assembling, operating and maintaining the Camkiosk. If you have any further questions, please do not hesitate to contact us, visit our website at www.cambro.com or call our Customer Service Dept.

StoreSafe® STORE FRESH

CAMBRO®
TRUSTED FOR GENERATIONS™

www.cambro.com

I. Part List

1. Shelf Section.
2. Three Rigid Poles, one 36" x 1½" & two 36" x 1¼" with base unit and umbrella models or four 49" Telescopic Poles and one 36" x 1½" Rigid Pole for units with canopy.
3. One clear panel 11¼" x 78¾".
4. One clear panel 14½" x 40⅝".
5. Two pole plugs for rear holes operator side. Base model and umbrella models only.
6. One menu board.
7. One drawer.

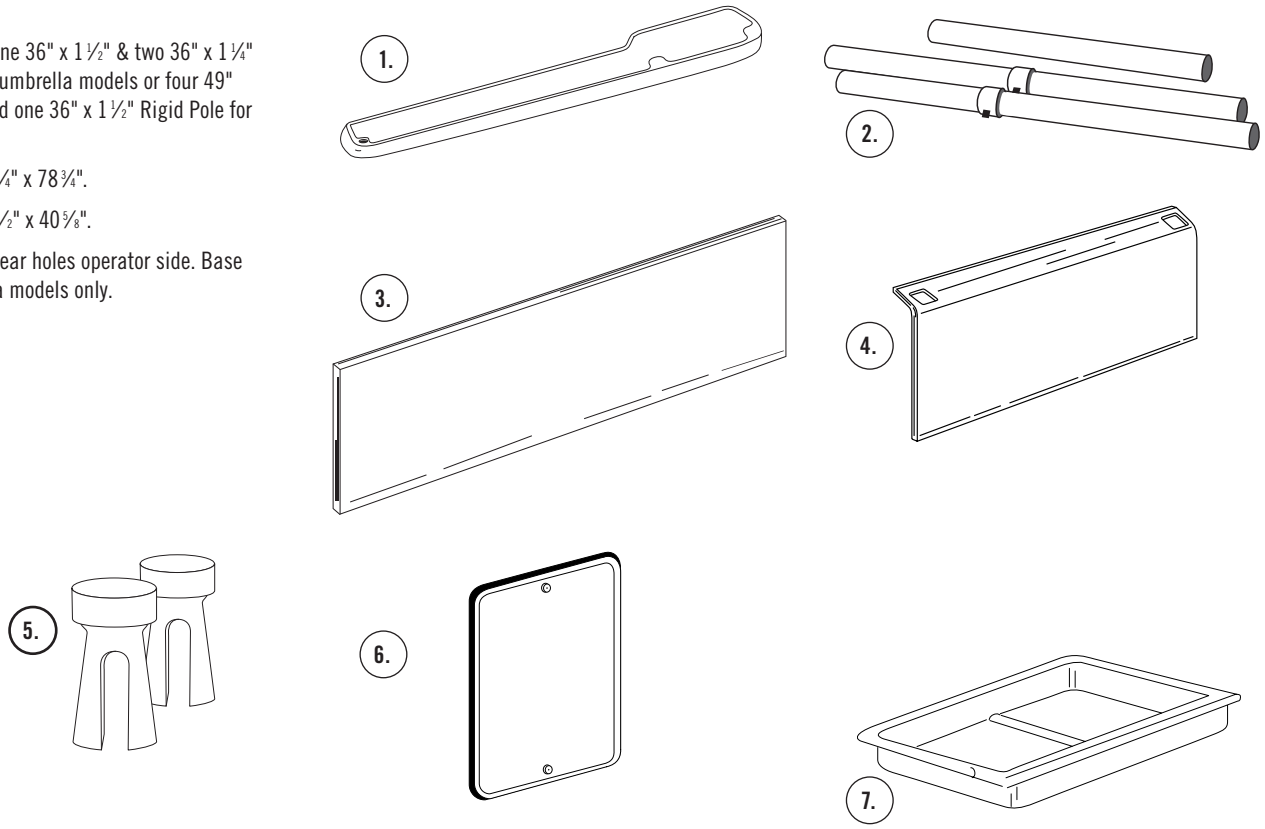

II. Assembly Instructions

Shelf and Sneeze Guard Only

1. CamKiosk models KVC854, KVC854U,KVC856, and KVC856U include 36" Rigid Poles.
2. Place 36" poles into sockets along the front (customer) side of main body counter. Take note that the center pole is of a larger diameter than the end poles.
3. Set the bottom clear panel (11¼" x 78¾")into the groove along the front edge or customer side of the countertop.
4. Slide shelf section down over poles until shelf rests firmly on clear panel.
5. Tighten thumb screws until shelf has a level appearance. (3 places)
6. Slide the small sneeze guard panel (14½" x 40⅝") over center pole and end pole on narrow side of shelf. Make sure bottom edge of panel fits into groove on shelf.
7. Tighten set screws at the base of each pole.

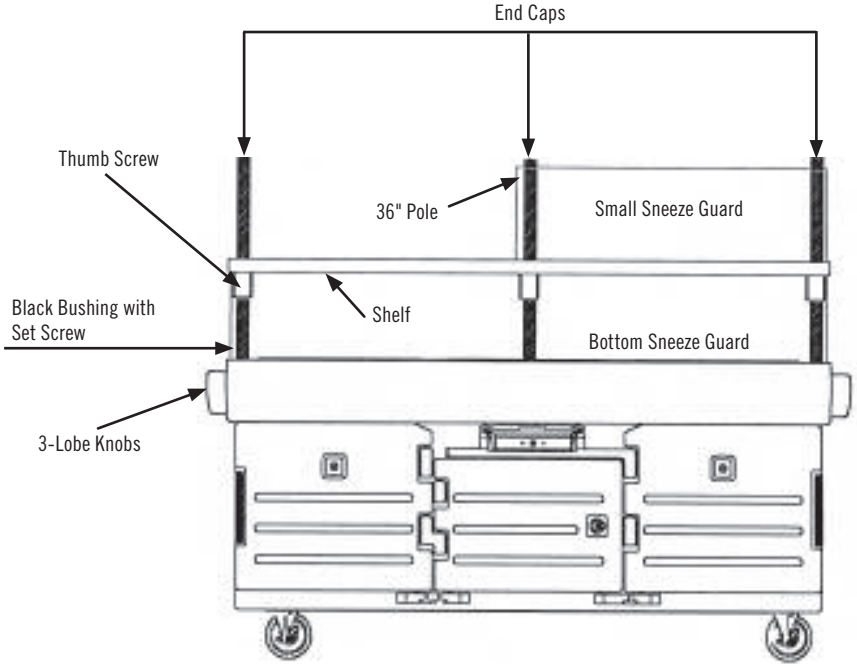

Umbrella

With sneeze guard assembly already in place:

1. Place umbrella into pole.
2. Let umbrella pole slowly drop into centerpole until button snaps into location hole.

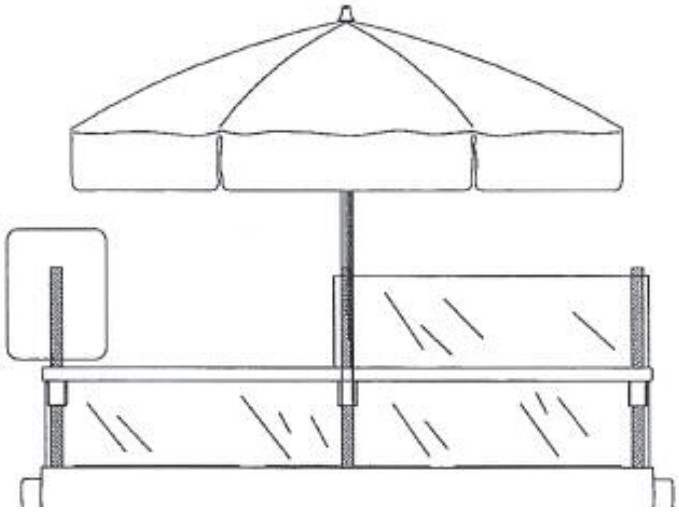

Sneeze Guard and Canopy

1. When canopy is ordered with the vending cart unit (ModelsKVC854C or KVC856C), sneeze guard end poles as well as poles to the back or operator's side, will be 49" long and telescopic.
2. Place the 36" rigid pole into the center hole on the customer side of the countertop.
3. Set the bottom clear panel (11 ¼" x 78 ¾") into the groove along the front edge or customer side of the countertop.
4. Place the shelf section down over the center pole until it is firmly resting on the clear panel below it.
5. Place one of the telescopic poles down through the shelf and into the countertop hole on the end of the shelf where it is wider for serving.
6. Slide the small sneeze guard panel (14 ½" x 40 ⅝") on to thecenter pole making sure the bottom edge of the panel fits into the groove on the top side.
7. Place the next telescopic pole down through the hole or slot of the top sneeze guard, the shelf, and finally into the hole of the countertop section.
8. Put the remaining two telescopic poles into the two holes onthe operator's side.
9. Rotate all 4 poles so that the knobs on the black clamps arefacing outward on both ends of the cart. Then tighten the setscrews in each black bushing as well as the thumb screws on the shelf section being sure to check that the shelf has a level appearance.
10. Place the canopy on top of the 4 poles and tighten the thumbscrews at each corner of the canopy.

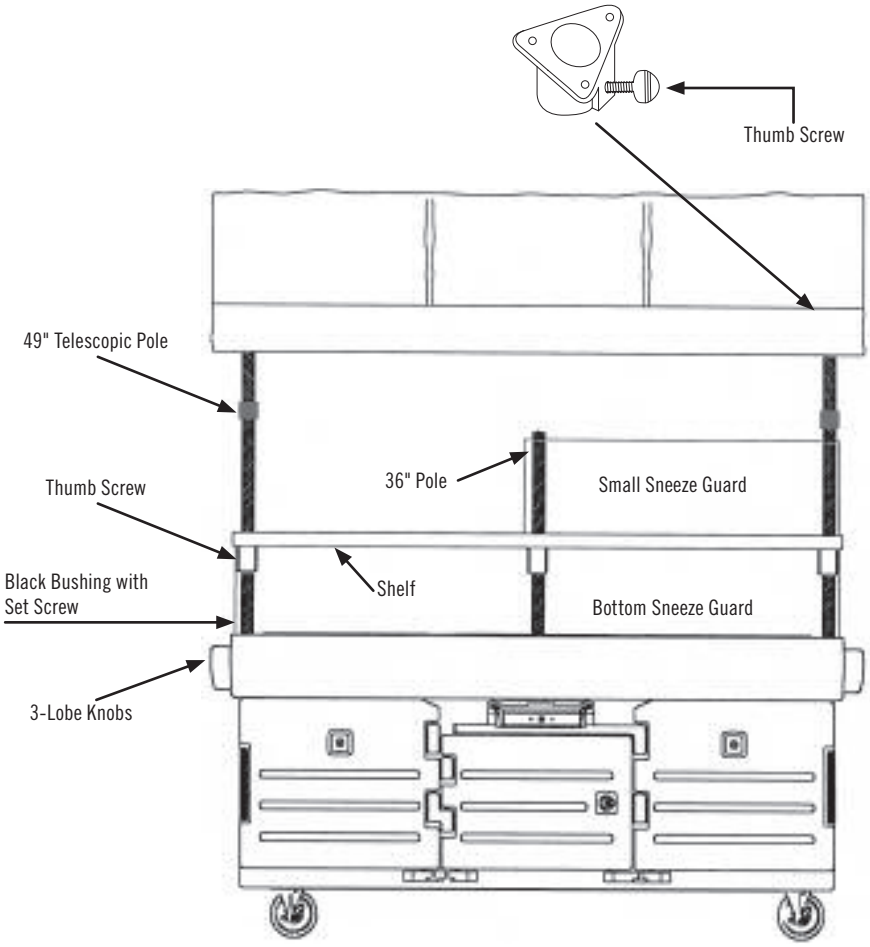

III. Maintenance and Cleaning

The Cambro CamKiosk is designed to be easily serviced and maintained. The CamKiosk should be cleaned regularly. Additionally, it should be cleaned before using if it has been idle for 5 days or more.

CamKiosk Body/Display-Serving Shelf/Holding Compartments
Steam clean or wash with warm soapy water and a soft plastic or bristle brush. **NEVER** use a metal brush or abrasive cleaner. Scrub with brush, and rinse thoroughly with clean water. If staining occurs, any standard de-stainer such as Ecolab's "Dip It" should be used.

Clear Plastic Sneeze Guard Shield
Wash the clear plastic shield with warm soapy water. Rinse thoroughly. Dry with soft cloth or soft paper towel.

NEVER use alcohol, i.e. Windex, abrasives, any type of solvent or acetone
Alcohol based cleaners will cause the shield to crack.

Vinyl Canopy
Spray rinse with water from a hose. Wash with mild detergent and use a sponge or soft brush to remove debris.

Metal Uprights & Frame for Canopy
Clean frame/uprights with a damp cloth and mild soap. Apply car wax to poles to prevent oxidation.

Casters

Caster maintenance should be performed after every cleaning.

1. Grease swivel raceway of caster using a lubricant such as Lubriplate #930-AA, Keystone #84EPXLT multi-purpose grease or equivalent. Apply grease using a grease gun with a needle nose adapter or a tube-type applicator such as Sta-lube Moly-graph Assembly Lube (Fig.6). These can be obtained at most auto parts stores.
2. Use a light oil such as WD-40 on the hub (Fig.7). Check caster for damage and test caster spin and swivel rotation before returning to service.

Fig. 6

Fig. 7

Optional Accessories

Hand Sink Cart (110V) KSC402	Cutting Board CB1220
Hand Sink Cart (220V) KSC402220	Camchiller® CP1220
Bridge Connector KMC24	Well Cover WCR1220

IV. Replacement Parts

Please visit www.cambro.com for a complete list of replacement parts. The model number of the Cambro Camkiosk® is required to determine the correct replacement part.

TO ORDER REPLACEMENT PARTS:
- **Call Cambro Customer Service at 1 800 833 3003 or**
- **Fax your order to 1 714 842 3430 or**
- **Call your local Cambro representative/distributor**

V. Warranty

Cambro warrants to the original buyer that is a product proves defective:
1. Within 1 year from the date of manufacture, Cambro will replace the product free of charge; or,
2. After 1 year and up to 2 years from the date of manufacture, Cambro will grant a credit of 2/3 off replacement product; or,
3. After 2 years and up to 3 years from the date of manufacture, Cambro will grant a credit of 1/3 of the original price towards a replacement product.

© Cambro Manufacturing Company 5801 Skylab Road, Huntington Beach, California 92647-2056
Printed in USA 02/20

UMKVC0605 REV B

D022003 CamKiosk MN