BEVERAGE-AIR®

INSTALLATION AND OPERATING INSTRUCTIONS
for all Hydrocarbon
MT Models

3057689
Rev. 02/10/2026

3779 CHAMPION BLVD, WINSTON-SALEM, NC 27105
Phone: (888) 845-9800 | Fax: (800) 253-5168 | Web: beverage-air.com

SEE BACK COVER FOR WARRANTY REGISTRATION

ALI GROUP

WELBILT® an ALI Group Company

WELCOME

Thank you for purchasing a Beverage-Air cabinet. This series has passed our strict quality control inspection and meets the high standards set by Beverage-Air! You have made a quality investment that with proper maintenance will give you many years of reliable service!

Please read the following installation and maintenance instructions before installing or using your unit.

Important Information

- PLEASE READ THESE INSTRUCTIONS CAREFULLY BEFORE INSTALLING OR USING, IF RECOMMENDED PROCEDURES ARE NOT FOLLOWED, WARRANTY CLAIMS MAY BE DENIED.
- Your warranty registration information is located with this manual. Please complete the card and submit it to Beverage-Air within TEN days of installation. Failure to properly register equipment may limit or void the warranty.
- Beverage-Air reserves the right to change specifications and product design without notice. Such revisions do not entitle the buyer to corresponding changes, improvements, additions, or replacements for previously purchased equipment. Owner is not entitled to alter or modify equipment in any way without manufacturer's approval.

Safety 3
Important Information 4
Product Information 5
Clearance and Placement 6
Unpacking and Set Up 7
Operating Equipment 8
Shelf Installation 10
Electrical 11
Cleaning and Maintenance 12
Methods For Cleaning Stainless Steel 14
Help 15
For The Service Tech - R-290 and R-600 16
For The Service Tech - Wiring Diagrams 17
Limited Warranty 27
Replacement Parts 29

SAFETY

When using electrical appliances, basic safety measures should always be taken. This appliance has been designed with your safety in mind. It has many features to keep you from being harmed. However, safe operation and maintenance are your responsibilities.

CAUTION

Use: When using this unit, please:

- **Move it carefully.** If on casters be sure the casters do NOT run over the power cord.
- **Lock** the casters when in use.
- **Seek help.** This machine is heavy! Be sure to move with enough help to avoid tipping or dropping the cabinet Use care when moving or handling this equipment. It is equipped with flammable refrigerant. Damage to refrigerant tubing will increase the risk of a leak
- **Prevent children from playing in or on the cabinet**. Do not allow children to climb on or around equipment. Persons unable to use this product must be prevented access.
- **Follow all manufacturers instructions**. There are many safety labels and directions on the unit. Heed them.
- **Watch your fingers**. There may be pinch points near the door hinges.

CAUTION

Maintenance

Do NOT:

- Clean a frozen evaporator with a sharp object
- Clean a dirty condenser with a sharp object.
- Store gasoline, kerosene or any other flammable material near the cabinet.

Do ALWAYS

- Use a Beverage-Air recommended technician certified to repair R-290 or R-600 equipment. Seek factory authorized technicians trained to safely maintain and service systems that utilize these flammable refrigerants. RSES offers training and certification.
- Use ONLY Beverage-Air factory authorized replacement parts. Use of non OEM parts can be dangerous because of the design changes needed to safely use R-290 or R-600.

Important Information to Add

Record the model number, serial number and the date of installation here for future reference. The model and serial numbers are on the unit's serial number dataplate, which is located on the left inside wall.

Model Number	
Serial Number	
Date of Installation	
Purchased From	

CAUTION **WARNING**

Observe the **Caution** and **Warning** notices. They are indicators of important safety information. Keep this manual for future reference.

IMPORTANT INFORMATION

This unit is intended to be used in a commercial application. That includes bars and restaurants.

If installed in a residence, some commercial service companies may not be able to service it on site.

The manufacturer has designed and produced this machine with the finest in materials. The manufacturer assumes no liability for units that have been altered in any way. Alterations or part substitutions will void the warranty.

Limitations

The machine is designed for use indoors in a controlled environment. It must be kept dry, not overheated or subjected to excessive cold. May only be connected to a dedicated electrical circuit. Extension cords are not permitted.

	Minimum	Maximum
Voltage	100	130
Room Air Temp	75.2 ° F	100° F

Air Flow, All Models regardles of sections, or door count.

Agency Approvals

These marks appear on the dataplate or serial tag, located in the inside of the left wall. The dataplate also contains the model and serial numbers as well as electrical requirements.

PRODUCT INFORMATION

Model	Cabinet Dimensions w x d x h (Inches)	Sections	Full Load Amps	Power Cord Plug (NEMA)	Refrigerant Type / Charge (g) / Charge (oz)
REFRIGERATOR MODELS					
MT08	18 7/8 X 20 5/8 X 71 3/8	1	1.8		R-600 / 45 / 1.59
MT10	24 7/8 X 22 13/16 X 54 3/8	1	3.2		R-290 /47 / 1.66
MT12	24 7/8 X 22 9/16 X 63 1/4	1	4.1		R-290 /55 / 1.94
MT21	39 1/8 X 24 1/2 X 61 7/32	2	3.6		R-290 /65 / 2.29
MT23	29 1/2 X 25 13/16 X 78 5/16	1	7.0		R-290 /55 / 1.94
MT34	39 1/2 X 27 1/2 X 79	2	7.6		R-290 /60 / 2.12
MT41-48	47 1/4 X 21 3/4 X 48 1/8	2	3.1		R-290 / 50 / 1.76
MT41-54	47 1/4 X 21 3/4 X 54	2	3.1		R-290 / 50 / 1.76
MT49	47 1/8 X 29 3/16 X 78 3/8	2	8.3		R-290 /95 / 3.35
MT49-SD	47 1/8 X 29 1/4 X 78 3/8	2	8.3		R-290 /85 / 3.00
MT53	54 1/4 X 29 1/8 X 78 3/8	2	8.7		R-290 /95 / 3.35
MT53-SD	54 1/4 X 28 9/16 X 78 3/8	2	8.7		R-290 /95 / 3.35
MT72	78 3/4 X 33 5/8 X 79	3	13.6		R-290 / 160 / 5.65

Height includes casters.

- All refrigerator models will maintain product temperature between 32 and 44 degrees ˚F.
- All models are 115 volts, 60 Hz AC.
- ALWAYS REFERENCE YOUR EQUIPMENT DATA PLATE AMPS, REFRIGERANT AND REFRIGERANT CHARGE FOR THE MOST UP TO DATE AND ACCURATE VALUES.
- There are no access valves on the refrigeration system.

CLEARANCE AND PLACEMENT

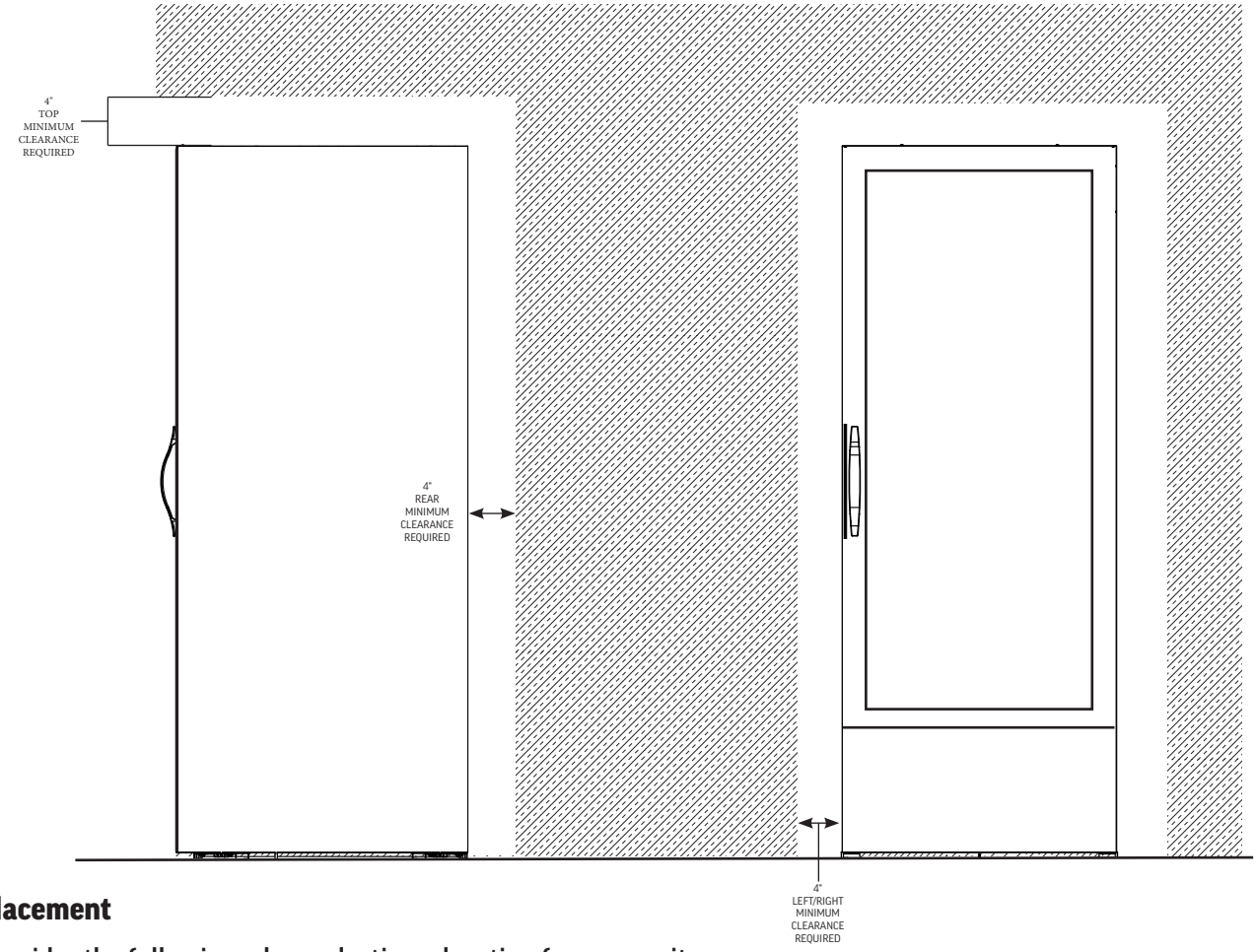

Placement

Consider the following when selecting a location for your unit:

Clearance:

- 4.0 in. at the top
- 4.0 in. at the rear
- 4.0 in. at the left side
- 4.0 in. at the right side
- 4.0 in. at the bottom

Note: Louver and Door must fully protrude from side walls

Floor Load: The floor on which the unit is located must be even and level, free from vibrations, and strong enough to support the combined weights of the unit and maximum product load.

Ventilation: Grille area at front must be free and clear of any object or wall.

Power Outlet: Dedicated power outlet is located within the length of the unit's power cord.

UNPACKING AND SET UP

IMPORTANT: It is not recommended to use a box cutter or razor knife when uncrating product. The use of these items could damage components and or scratch equipment surface. If necessary, only use these items to make cuts where indicated on crating, and/or on the back of the product while considering all precautions about using sharp tools.

Carefully inspect the shipping carton for damage. This is the only time that shipping damage may be claimed. If damage is suspected, open the carton immediately and, if there is damage, retain the carton and contact the shipper to make a claim. Do NOT contact the manufacturer.

WARNING

Risk of personal injury.
Unit must be securely supported while attaching casters or legs.

Uncrating

Tools Needed: Phillips screwdriver.

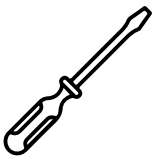

1. Cut the stretch wrap from any side, remove the cardboard from the corners, the cardboard top and the cardboard in the front and the back.
2. Remove the bond paper. Discard stretch wrap and any cardboard that will not be recycled.
3. Move unit as close to final position as possible before removing the skid.

Skid Removal

1. Remove the shipping screws using the Phillips screwdriver while the cabinet is held in one direction. Repeat the process while the cabinet is held in the opposite direction.
2. When tilting the cabinet in one direction block it securely with pieces of 2x4 lumber or other suitable material.
3. Tip the unit to one side to remove the skid. Repeat this step for the other side.

Leveling

Proper leveling is critical for effective drain flow and door operation. The cooler must be leveled from side to side and should be tilted backwards. The front leveling legs should be at least 3/8" higher than the rear ones.

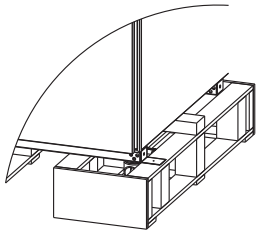

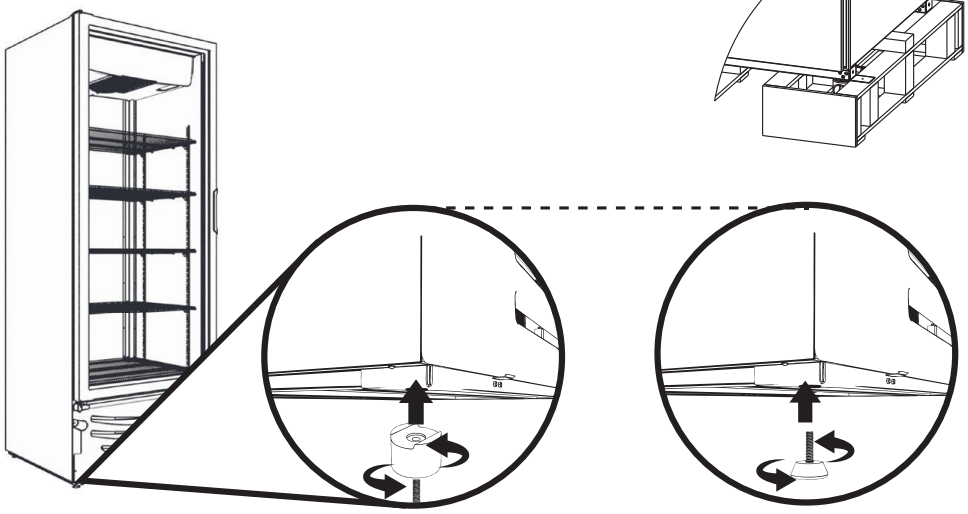

leveling skid

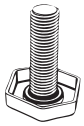

leveling screw

OPERATING EQUIPMENT

Operating Steps:

- Once equipment is in place, let stand for at least 12 hours to allow compressor oil to fully settle.
- Plug the unit into electrical outlet, following all previous instructions and electrical specifications.
- Avoid operating equipment with wet hands, or in standing water to avoid electrical hazard.

Temperature level adjustment knob

The ETC1H control in some models is also pre-configured by the manufacturer to maintain product temperature. It does not include a display that shows temperature or alarms. If you notice malfunctioning, please notify the Beverage-Air Technical Services Department.

Product Storage:

- Install shelves using metallic clips (make sure they are aligned at the same height).
- If the cooler has been turned off and it is necessary to turn it back on, wait at least one hour to cool the interior before reloading product.
- When the cooler is filled up, arrange and order product inside. Do not throw or drop product into the cabinet as it may damage the interior or shelving.

Air flow inside the cabinet is very important. Please make sure that:

- Product weight does not exert pressure on internal walls and product does not extend beyond perimeter of shelves.
- Avoid introducing products in closed boxes/cartons, trays, and/or bags sealed in plastic as it may affect actual product temperature.
- Keep products away from fan blades. Do not obstruct fan air inlets.
- Make sure there is at least 1" between product and shelf to allow proper air flow inside the cooler. Do not place product all the way back against the wall. The cooler comes with a wall separator to ensure that there is at least 1" clearance. **DO NOT REMOVE.**

IMPORTANT: Some models are designed to cool products at temperatures below 32˚F. Do not use this type of cooler for other products that may be quality affected due to these kinds of temperatures. Some products freeze when subjected to these temperatures and the containers may explode. If product containers are made of glass, they may cause lesions and serious wounds to you; thus, always follow recommendations and instructions from your supplier. Do not introduce unauthorized containers or product or ask the Service Center for further details.
We recommend that you restock equipment at the end of the day so product has a chance to cool to correct temperature by the next business day; doing so, will also contribute to energy savings. Always keep doors closed overnight to maintain proper temperature and efficencies.

MODEL NUMBER	MAXIMUM LOAD FOR HORIZONTAL GRILL (lbs)
MT08	58.64
MT10	112.65
MT12	98.54
MT21	85.98
MT23	147.71
MT34	98.54
MT49	121.48
MT49-SD	115.08
MT53	131.39
MT53-SD	147.71

- Avoid installing this cooler in direct sunlight.
- Do not install this cooler outdoors.
- This cooler must not be used or stored where ambient temperature is under 14˚F or greater than 140˚F or where relative humidity is greater than 75%.
- Never install equipment close to heat sources to avoid excessive energy consumption or equipment malfunction.
- Do not introduce products into the equipment that are warmer than the ambient temerature. Do not install close to heat sources, otherwise, this may cause an ineffiecient cooler operation and will increase energy consumption.
- Do not place items in front of grille. This could obstruct air flow causing the product to operate inefficiently and increase energy consumption.
- Do not place objects or appliances on top of this equipment. The cabinet is constructed of laminate and polyethylene foam that may end or deform when hit or stressed.
- For proper operation, equipment must have a minimum distance of 4" (10 cm) from walls and other structures in the back and on both sides.

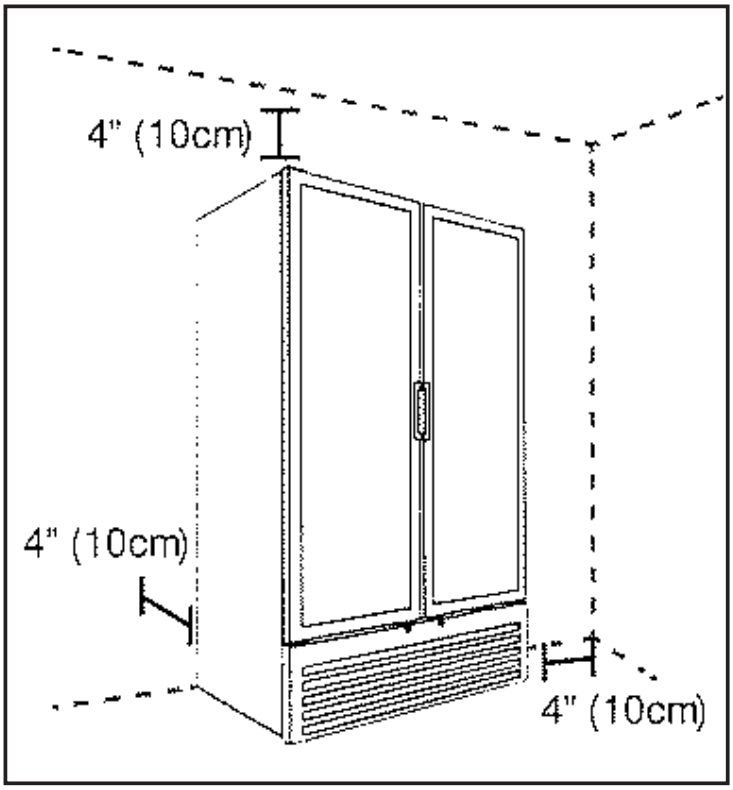

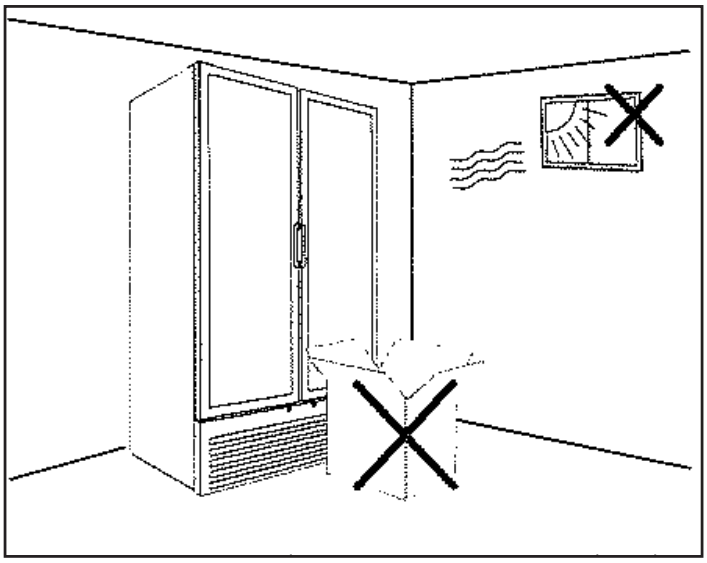

- Do not place objects or appliances on top of this equipment. The cabinet is constructed of laminate and polyethylene foam that may bend or deform when hit or stressed.
- For proper operation, equipment must have a minimum distance of 4" (10 cm) from walls and other structures on the top, the back, and both sides.

SHELF INSTALLATION

1. Determine the proper location for the shelf clips. The reference numbers on the pilaster can serve as a guide to ensure all clips are properly located.
2. Insert the top tab of the shelf clip into the desired hole of the pilaster. The retaining tab MUST be facing up as shown.
3. Rotate the clip downwards and insert the bottom tab into the matching hole in the pilaster. The clip may need to be squeezed slightly during installation.
4. Install all remaining clips.
5. Install shelves onto clips with the product retention bar facing up. Be careful not to dislodge clips during installation.
6. Place shelves so that the retaining tab on the clip captures the shelf as shown.
7. Confirm that the shelf is resting on ALL 4 clips and that the clips are securely attached to the pilasters.
8. Improper shelf clip installation could cause the shelf and / or the product on it to fall, resulting in damage to the unit and possible bodily injury.
9. Do NOT overload the shelves. The unit is designed to use all shelves that are supplied in an equally spaced manner. Contact Beverage-Air customer service if fewer shelves or a different configuration to ensure shelf overloading will not occur.

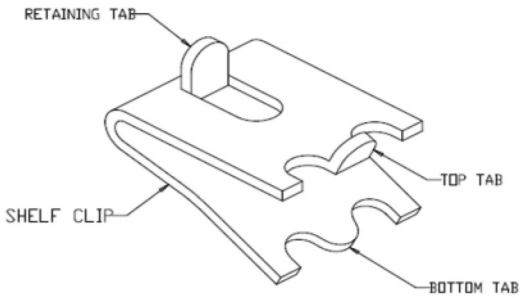

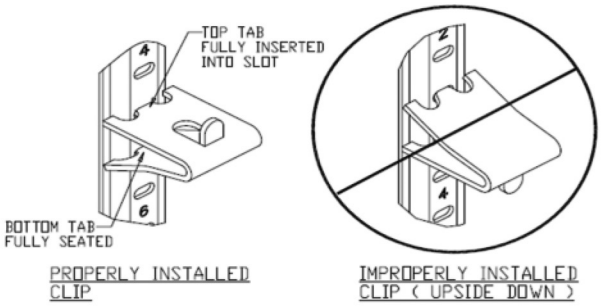

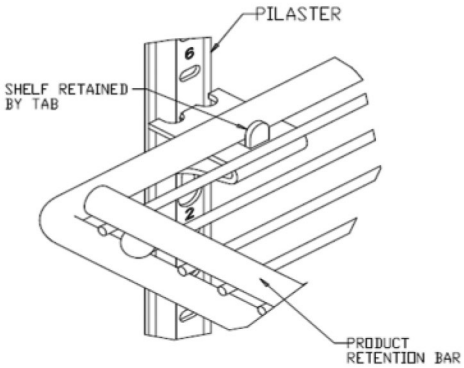

ELECTRICAL

This is a cord-connected unit, and must be connected to it's own **dedicated** power supply. Beverage Air coolers with HC refrigerants (R-290/R-600) are designed to operate at specific voltages. Prior to installation, check equipment serial number and the dataplate on the machine to confirm the voltage and per the dataplate use the correct fuses or HACR circuit breakers.

Note: Do not connect to GFI / GFCI outlets. Connection to that type of outlet can result in product loss due to unsafe cabinet temperature when GFI device trips from moisture.

IMPORTANT: ground connection is a protection system for equipment connected to an electrical network. It is used in electrical installations to avoid current pass-through to use, due to an isolation failure of active conductors. This cooler must be connected to a physical ground. In case a short circuit occurs, ground connection reduces the risk of electrical shock.

Power Cord

This 115 volt model is equipped with a polarized power cord with a grounded 5-15P connection plug. Do not attempt to eliminate the ground connection or use two-terminal adapters. Plug must be connected to an adequately-installed and grounded outlet. If the owner does not have this type of outlet, it is their responsibility to have one installed. Please contact a cerified electrician or a certified technician if you have questions.

If the power cord becomes damaged, it must be replaced with the identical cord. Using extension cords will void the warranty.

Follow All National and Local Codes

This Unit Must Be Grounded. Do not use extension cords and do not disable or by-pass ground prong on electrical plug.

Initial Start Up

Plug the power cord into the proper power supply. Connect the plug firmly into the electrical outlet making sure it is inserted properly.

The cabinet will soon begin to blow warm air out of the top area, and cool air will flow from the inside blower.

The cabinet temperature has been set at the factory and should not need adjustment, however if it was changed, the standard setting for refrigerators is 36.3° F for single door equipment and 35.4˚F for two door equipment.

Cautions

Care must be taken whenever moving or servicing the unit. The refrigerant is contained in a sealed system, but if released it may be flammable.

In order to avoid severe electrical shock, do not remove the third ground connection pin from power cord or use an adapter.

If the power cord or other electronic components are damaged, contact the manufacturer or authorized service technician for repair to avoid injury or electrical shock.

CLEANING AND MAINTENANCE

Cleaning Schedule:

Cabinet	Condenser coil	Gaskets	Routine maintenance
Daily wipe down Weekly interior	Monthly cleaning or as required	Daily inspection, check that hinges are tight to the cabinet.	Annually

IMPORTANT:

Disconnect the cooler from wall outlet before you perform any maintenance or cleaning.

Always perform cleaning and maintenance tasks in a safe manner.

Do not clean equipment with a water hose or jet wash as it may cause damage to electrical components and cause electric shock. Do not use sharp objects during cleaning to remove excess dirt, use a brush if required. Do not use any solvents or abrasive products for cleaning tasks, this may damage surface finishing.

Daily Exterior Cleaning

It is much easier to clean on a regular basis than to have to remove stains once they have built up. Regular cleaning helps avoid deterioration and impedes malfunctioning which may alter product preservation.

1. Wash with a soft cloth, warm water, and a mild detergent that does not contain chlorine.
2. Rinse with clean water.
3. Dry with a soft cloth.
4. Polish with a soft cloth, wiping with the grain.
5. Wipe weekly with stainless steel cleaner.
6. Use a broom or dry mop to clean the area under the equipment. Avoid splashing water directly onto the front, or underneath the cooler.

Weekly Interior Cleaning

1. Remove all food, food related items, and shelves. Store the food at a safe temperature.
2. Disconnect power to the unit (unplug it or switch the breaker off).
3. Remove all loose food particles from the inside walls, floor, door liner, and ceiling.
4. Clean all interior surfaces and door gaskets with a soft cloth, warm water, and mild soap. The door gasket must be cleaned regularly in order to ensure a proper seal.
5. Rinse with clean water and allow to air dry.
6. Return the shelves to the unit and secure them.
7. Restore power.
8. Return food to the unit when it has reached a safe temperature.

Condenser Cleaning

The condenser must be cleaned once a month, or when required to avoid dirt from reducing cooling system efficiency.

To clean the condenser, the front grille will need to be removed as shown in the illustration below.

Remove dust, lint, and debris with a soft bristle brush or broom.

In kitchens and/or cooking areas where grease may accumulate, the condenser may need to be cleaned with water and degreasing agent.

IMPORTANT: Do not use solvent or abrasive products for cleaning as they may damage the surface.

Do not use sharp pointed objects to remove grease, use a brush if required.

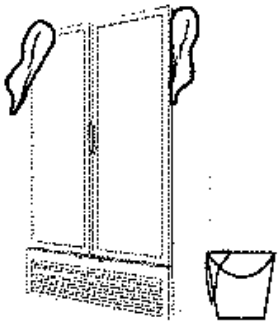

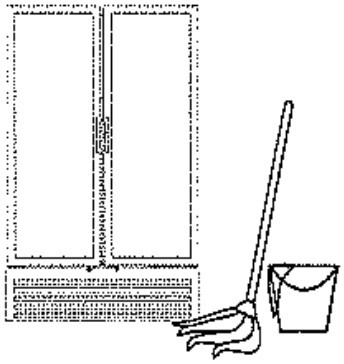

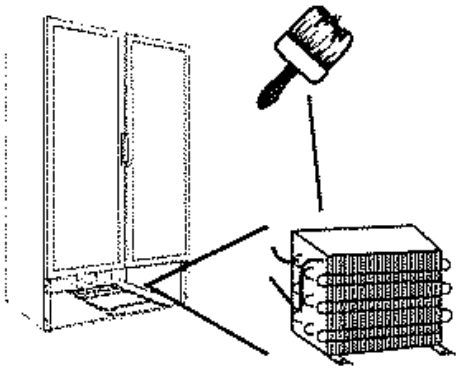

Evaporator Defrost

This product is equipped with an automatic evaporator defrost system to guarantee adequate interior air flow.

If you notice ice forming and/or equipment is not cooling properly, contact the Beverage Air Technical Service Center for assistance.

Plastic Evaporator Housing

1. Unscrew the drain nut
2. Remove the drain hose
3. Remove (A) screws from the evaporator housing
4. Remove the plastic evaporator housing

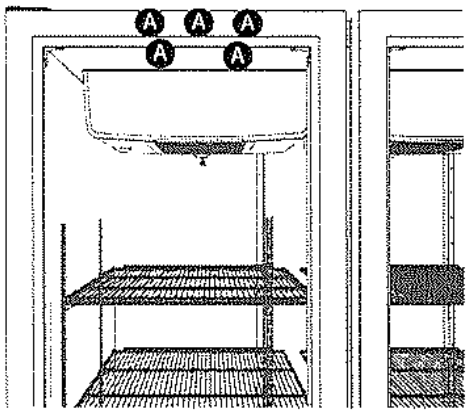

Tube Cover

1. Remove the grilles
2. Unscrew the fixing points of the tube cover
3. Remove the screws from the tube cover
4. Remove the tube cover

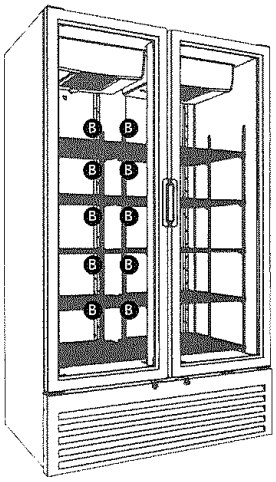

METHODS FOR CLEANING STAINLESS STEEL

Cleaning Needed	Cleaning Agent	Method of Application	Affect on Finish
Smears and fingerprints	Areal 20, Lac-O-Nu, Lumin Wash O'Cedar Cream Polish, Stainless Shine.	Rub with cloth as directed on the package.	Satisfactory for use on all finishes. Provides barrier film to minimize prints.
Stubborn Spots and Stains, Baked-On Splatter, and Other Light Discolorations	Allchem Concentrated Cleaner.	Apply with damp sponge or cloth. Rub with damp cloth.	Use in direction of polish lines on No. 4 (polished) finish. May scratch No. 2 (mill) and Nos. 7 and 8 (polished) finishes.
	Samae, Twinkle or Cameo Copper Cleaner	Rub with damp cloth.	
	Grade FFF Italian pumice, whiting, or talc.	Rub with dry cloth.	
	Liquid NuSteel Paste NuSteel or DuBois Temp. Copper's Stainless Steel Cleaner Revere Stainless Cleaner Household cleansers, such as Old Dutch, Lighthouse, Sunbrite, Wyandotte, Bab-O, Gold Dust, Sapolio, Bon Ami, Ajax, or Comet Grade F Italian Pumice, Steel Bright, Lumin Cleaner, Zud, Restore, Sta-Clean, or Highlite. Penny-Brite or Copper-Brite.	Use small amount of cleaner. Rub with dry cloth using a small amount of cleaner. Apply with damp sponge or cloth. Rub with a damp cloth. May contain chlorine bleaches. Rinse thoroughly after use. Rub with a damp cloth. Rub with a dry cloth using a small amount of cleaner.	
Heat tint or discoloration	Penny-Brite or Copper-Brite. Past NuSteel, DuBois Temp, or Tarnite. Revere Stainless Steel Cleaner. Allen Polish, Steel Bright, Tenacious Deposits, Rusty Discolorations, Industrial Atmospheric Stains Wyandotte, Bab-O or Zud.	Rub with a dry cloth. Rub with a dry cloth or stainless steel wool. Apply with damp sponge or cloth. Rub with a damp cloth.	
Burnt-On Foods and Grease Fatty Acids, Milkstone (where swabbing or rubbing is not practical)	Easy-Off, De-Grease-It, 4 to 6% hot solution of such agents as trisodium phosphate or sodium tripolyphosphate or 5 to 15% caustic soda solution	Apply generous coating. Allow to stand for 10-15 minutes. Rinse. Repeated application may be necessary.	Excellent removal, satisfactory for use on all finishes.
Tenacious Deposits, Rusty Discolorations, Industrial Atmospheric Stains	Oakite No. 33, Dilac Texo 12, Texo NY, Flash-Klenz, Caddy Cleaner, Turco Scale 4368 or Permag 57.	Swab and soak with clean cloth. Let stand 15 minutes or more according to directions on package, then rinse and dry.	Satisfactory for use on all finishes
Hard Water Spots and Scale	Vinegar. 5% oxalic acid, 5% sulfamic acid, 5 to 10% phosphoric acid, or Dilac, Oakite No. 33, Texo 12, Texo N.Y.	Swab or wipe with cloth. Rinse with water and dry. Swab or soak with cloth. Let stand 10-15 minutes. Always follow with neutralizer rinse, and dry.	Satisfactory for all finishes. Satisfactory for all finishes. Effective on tenacious deposits or where scale has built up.

HELP

Malfunction	Possible Cause	Likely Solution
No cooling - unit is silent	Unit not plugged in. Fuse or circuit breaker tripped. Power cord plug loose in outlet.	Connect to proper voltage circuit, Replace fuse or reset breaker, Check outlet for loose connection, replace as needed
Unit cools but runs constantly	Dirty condenser.	Clean the condenser
Internal temperature too high	Dirty condenser. Evaporator iced over, or unit in high temperature environment.	Clean condenser, Defrost evaporator, Reduce ambient temperature around equipment
Internal temperature too low, freezing product	Temperature control.	Adjust or replace control
Not cooling - compressor not on	Temperature control stuck in open position.	Replace temperature control
Not cooling - compressor hums but does not start	Low voltage to unit. Compressor starting system failure.	Check voltage, and correct as needed, Check start relay and start capacitor, See next step
Not cooling - compressor starts but doesn't stay on	Compressor start relay failure. Compressor start capacitor failure.	Replace relay or capacitor
Not cooling - compressor cycles on	Overheating or weak overload.	Clean condenser, check fan motor and blade. Check refrigerant charge, replace overload
Unit cools but turns on and off frequently	No product in cabinet. Temperature control defective. Refrigeration issue.	Fill cabinet Replace control Have system checked
Excessive noise	Tubing rattle. Loose parts, bent or broken fan blade, Noisy fan motor.	Check tubing for routing. Check for loose components, Replace fan blade, Replace fan motor

FOR THE SERVICE TECH R-290 AND R-600

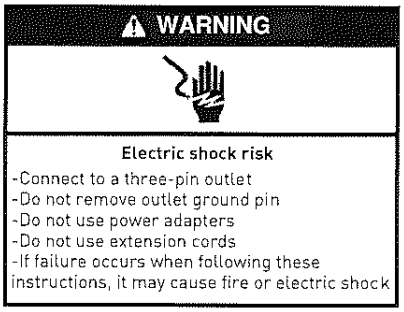

Refrigeration service should only be attempted by a trained trade professional certified to work on R-290 or R-600 systems.

Here are some critical service items.

This list does not qualify anyone to service the unit. It is a reminder and checklist for the service tech. Keep these in mind for **R-290 and R-600 service**:

- Wire nuts are NOT to be used when changing an electrical part.
- The switches in this product are sealed, **only exact replacements** may be used.
- The process tubes are to be used for service access.
- Cut out (with tubing cutter) refrigeration components that are to be replaced. Do NOT un-braze.
- Because this refrigerant can be vented into the air during service, the venting MUST be in an area free from flame or spark. It must be near an opened window or door.
- A sign noting service of a system containing propane must be attached to the unit during refrigeration service.
- A combustible gas leak detector must be used to inform anyone in the area when propane is present in the air.

Other Information:

Recovery: If opening the system, all remaining refrigerant must be recovered.

Evacuation: It is critical that a refrigeration system be leak free and internally dry. A thorough evacuation with a good vacuum pump with a micron gauge attached is the only way to ensure that the system is dry and ready for a charge of refrigerant.

Charging: The system is critically charged and the proper type and amount MUST be weighed in.

Overcharge symptoms: Unit will cool properly but the suction line temperature will be unusually cold. Compressor run time will be longer than normal.

Undercharge symptoms: Long run time, poor cooling and a hot compressor dome are the main symptoms of an undercharge.

Selected System Components and Definitions:

System - Hermetically sealed system that includes compressor, finned condenser, finned evaporator, and capillary tube metering device.

Compressor - Vapor pump that moves the refrigerant.

Condenser - Finned tubes that contain hot refrigerant gas, condenser fan moves air over it to discharge heat. Air contains dust and other contaminants, causing eventual need for cleaning.

Fan Motor - Related and used with the condenser, the fan motor rotates the fan, moving air across the condenser. Air flow is out the back of unit. The fan motor will be operating in conjunction with the compressor, unless the compressor has overheated, in which case the fan motor will be on when the compressor is not operating.

Evaporator - Finned tubes that contain low pressure refrigerant, evaporator fan (when used) moves cabinet air over it to extract heat.

FOR THE SERVICE TECH - WIRING DIAGRAM FOR MT08

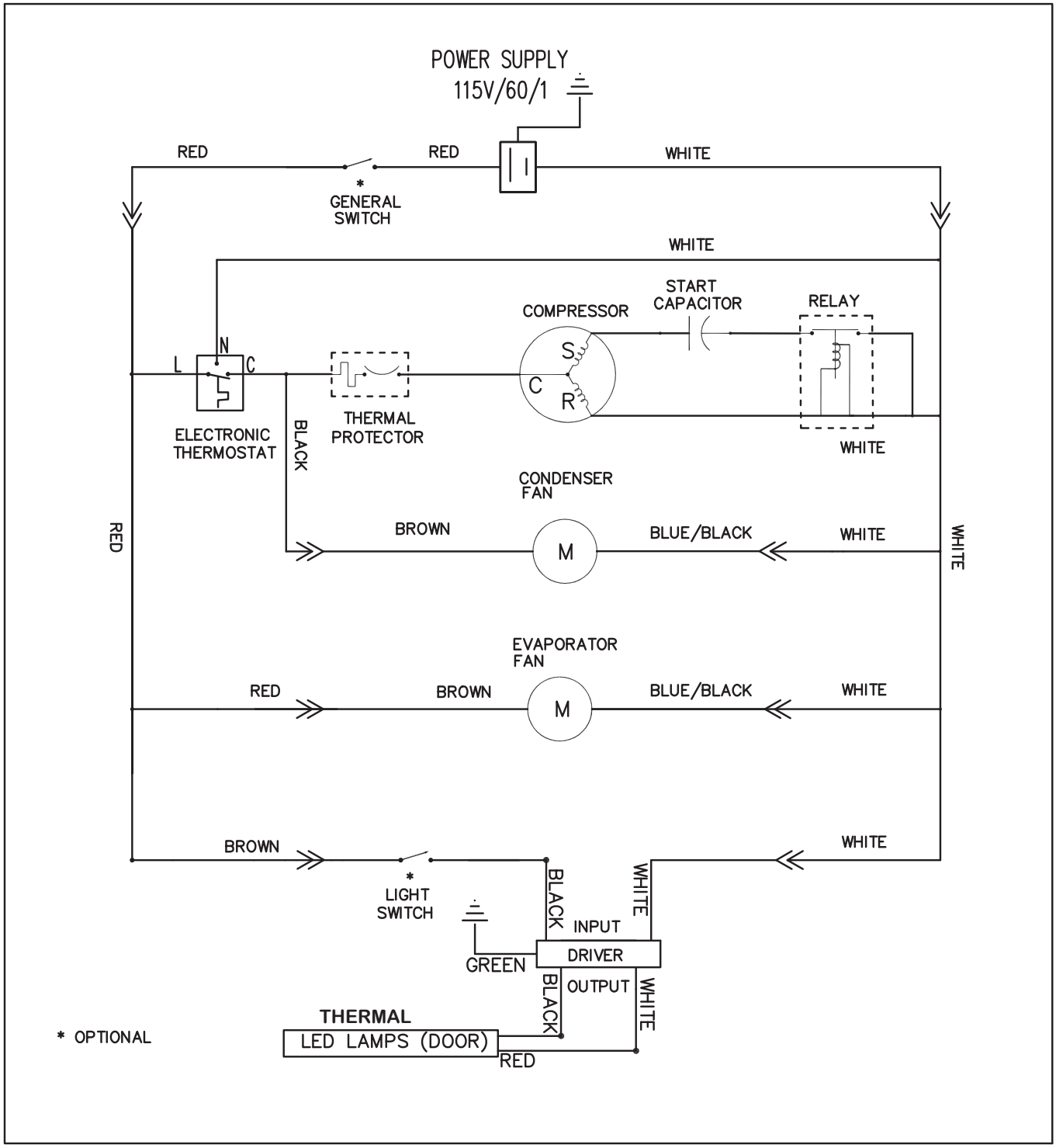

FOR THE SERVICE TECH - WIRING DIAGRAM FOR MT10

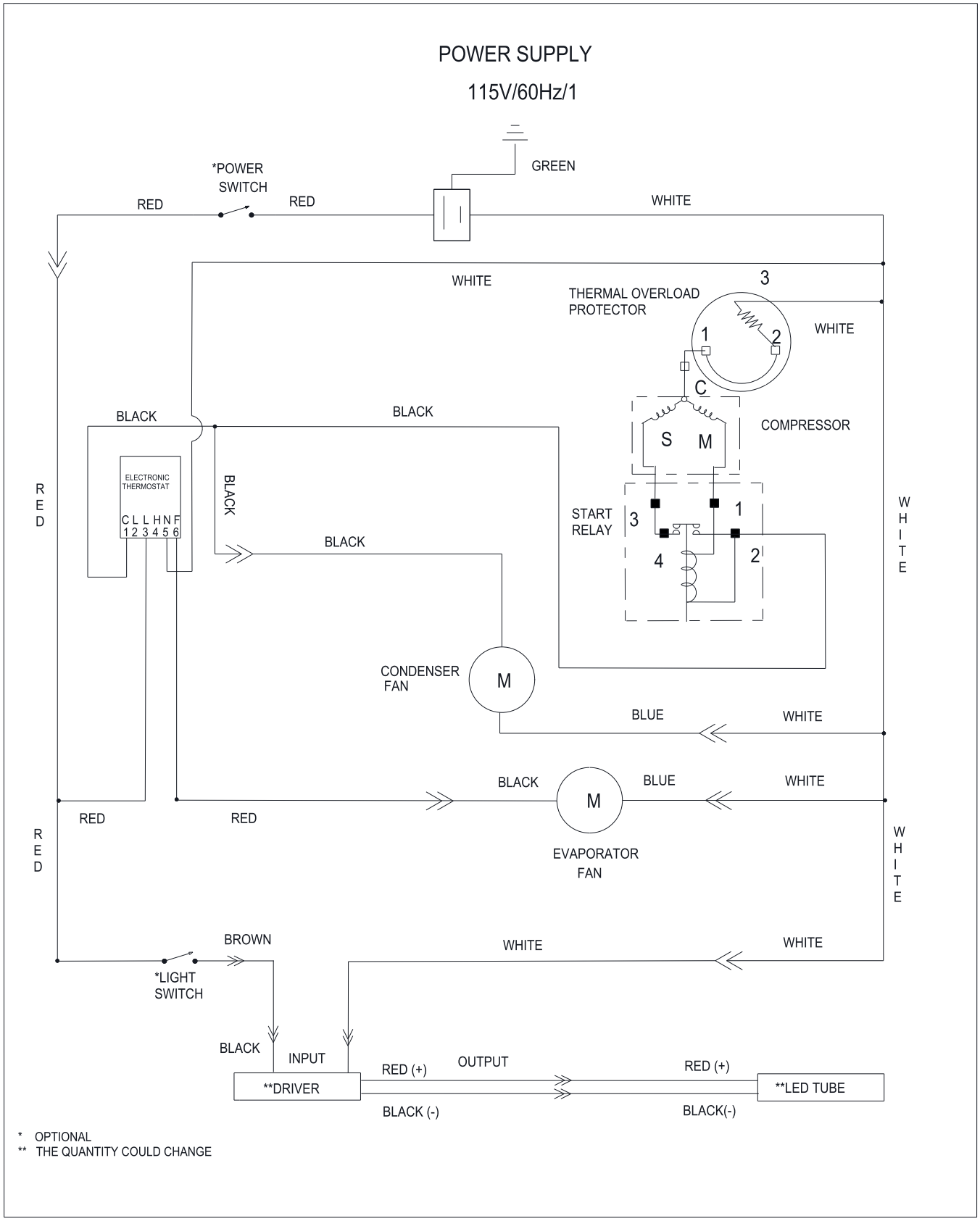

FOR THE SERVICE TECH - WIRING DIAGRAM FOR MT12

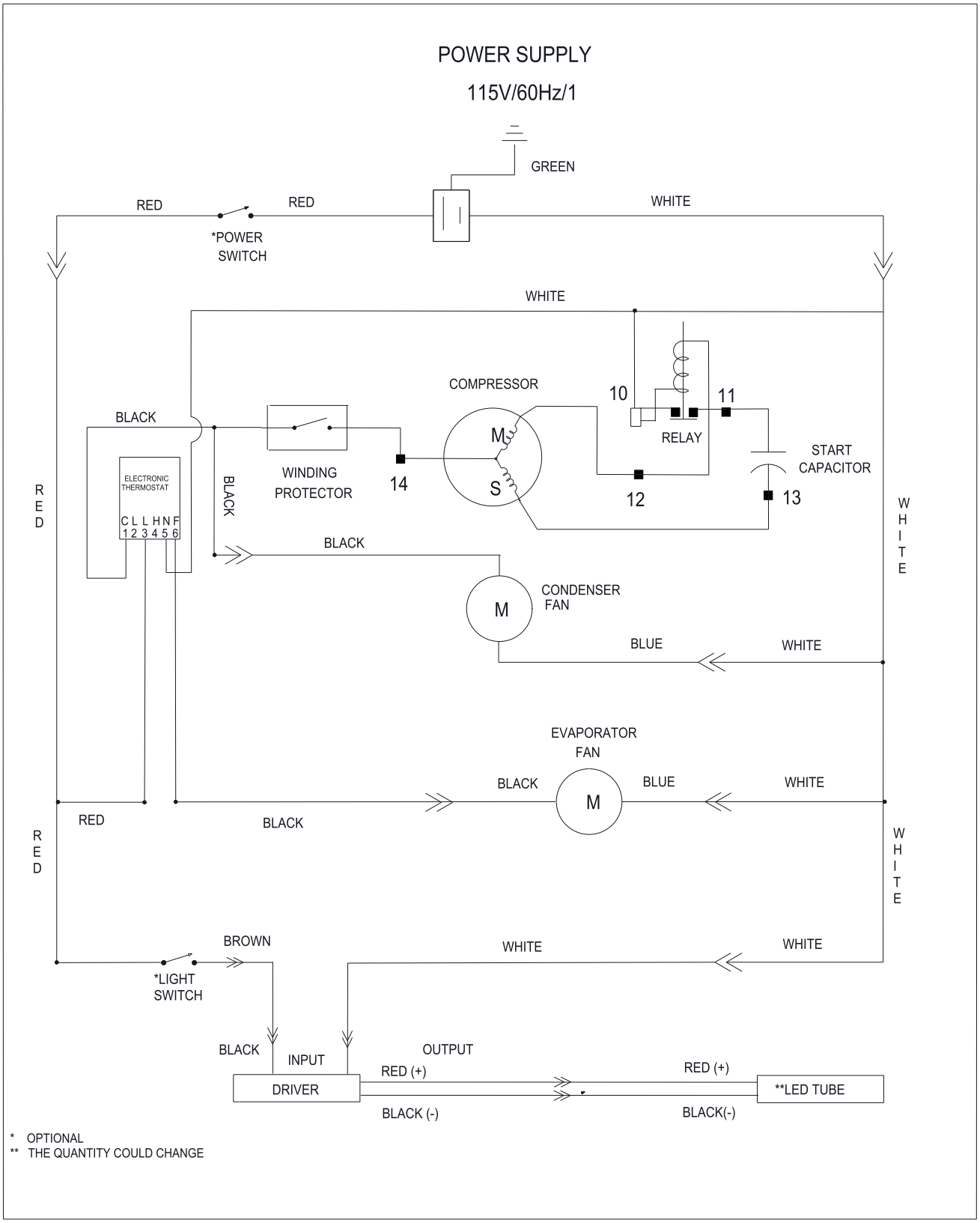

FOR THE SERVICE TECH - WIRING DIAGRAM FOR MT23

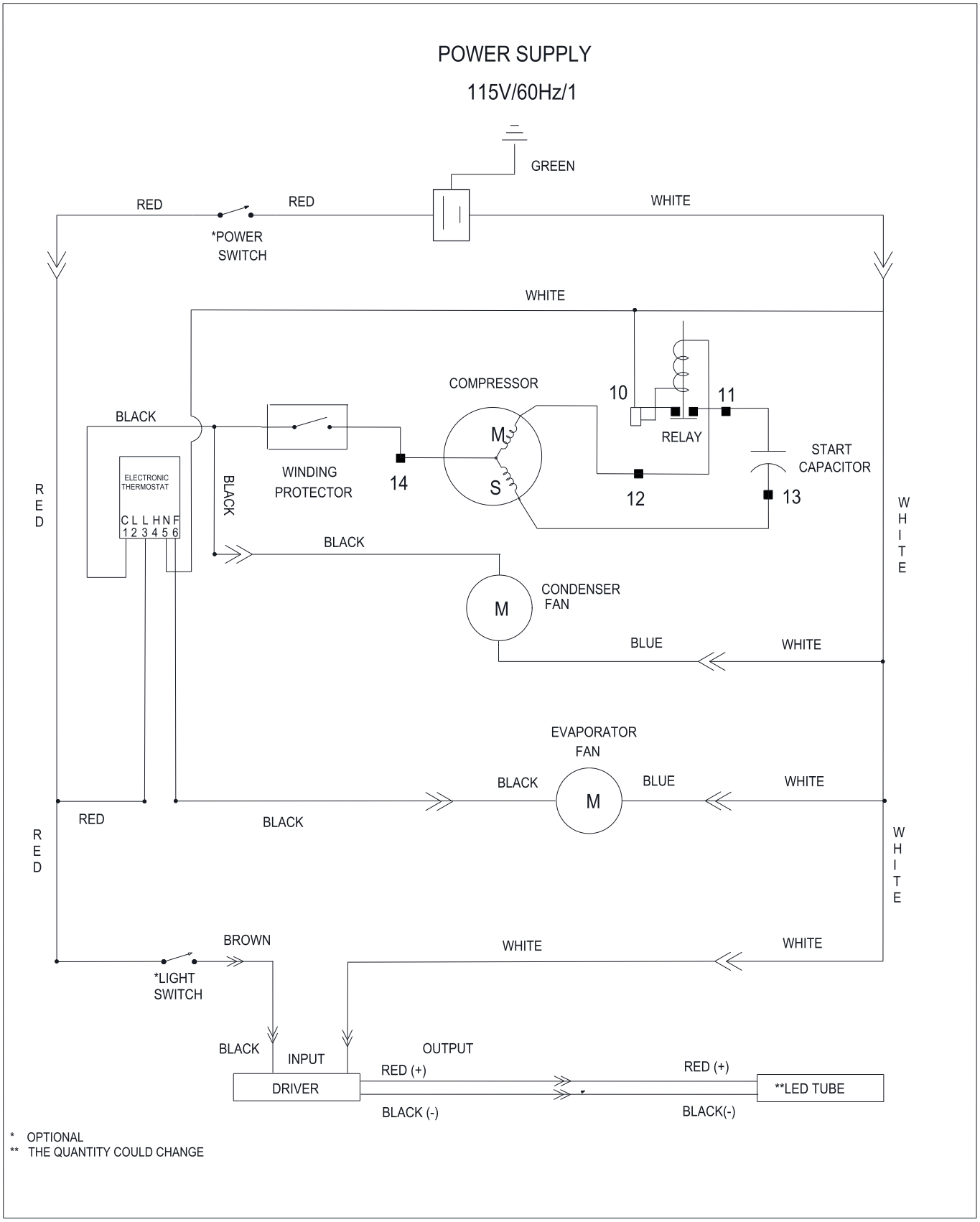

FOR THE SERVICE TECH - WIRING DIAGRAM FOR MT41-48 & MT41-54

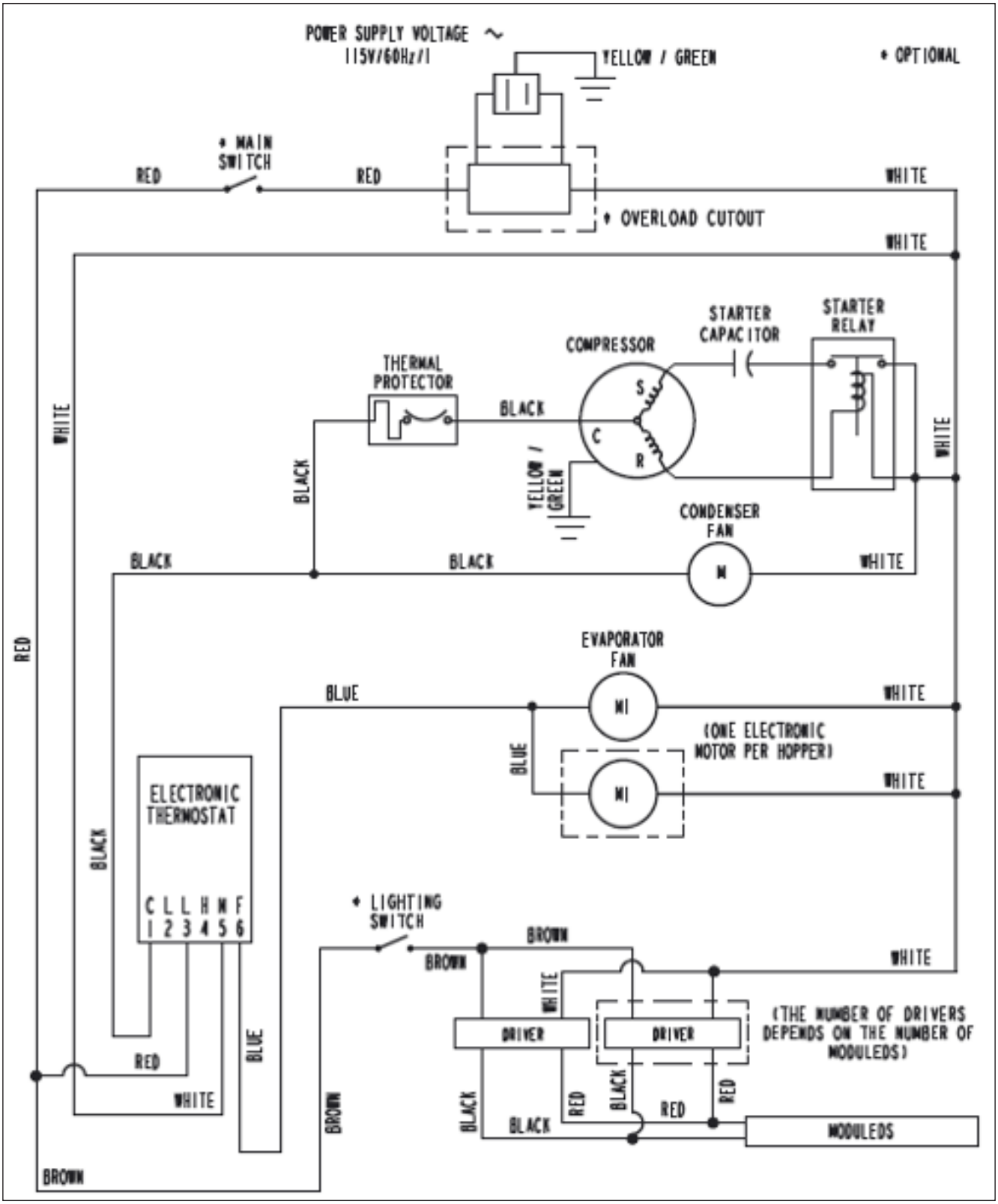

FOR THE SERVICE TECH - WIRING DIAGRAM FOR MT49 HINGED DOOR

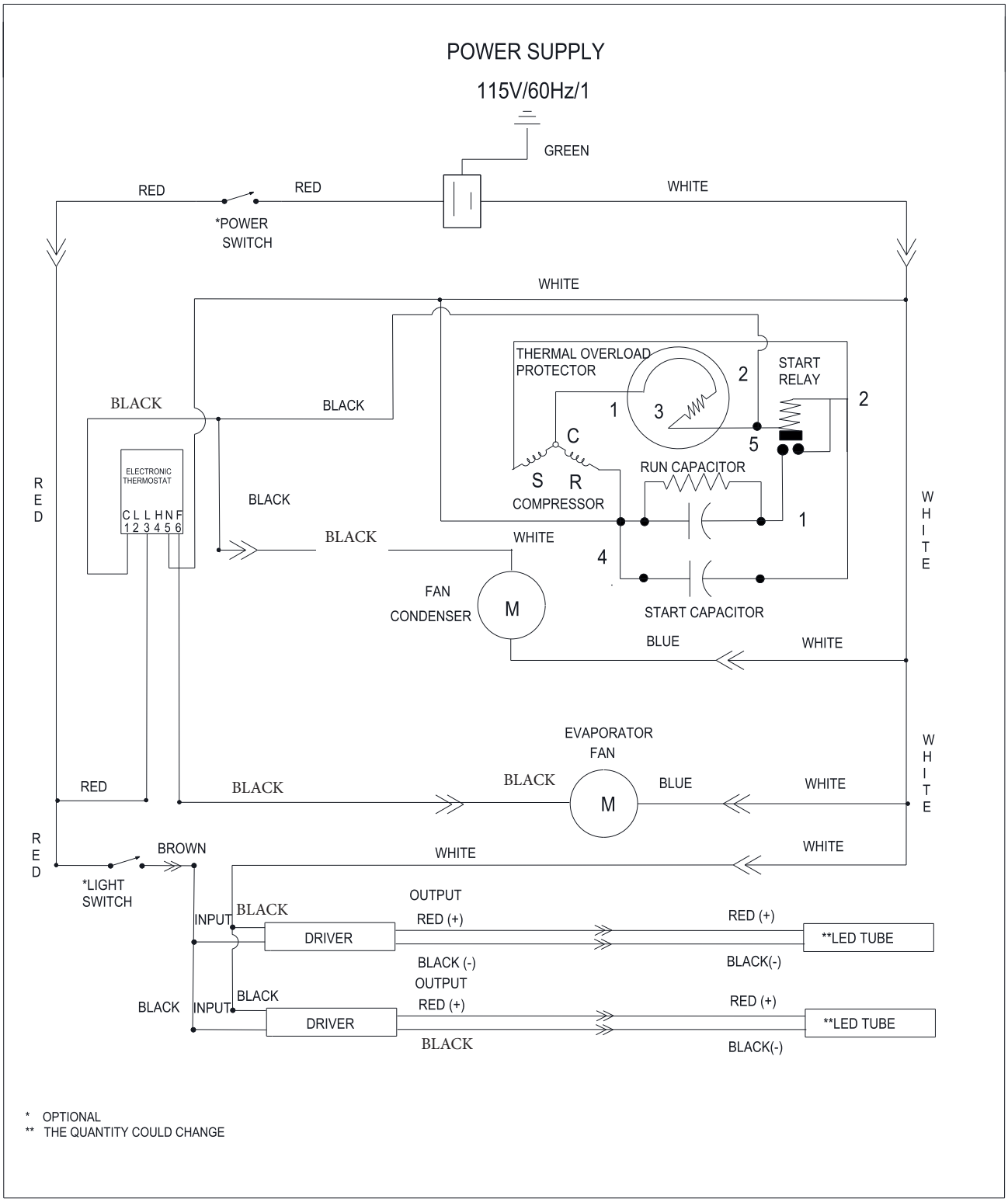

* OPTIONAL
** THE QUANTITY COULD CHANGE

FOR THE SERVICE TECH - WIRING DIAGRAM FOR MT49 SLIDING DOOR

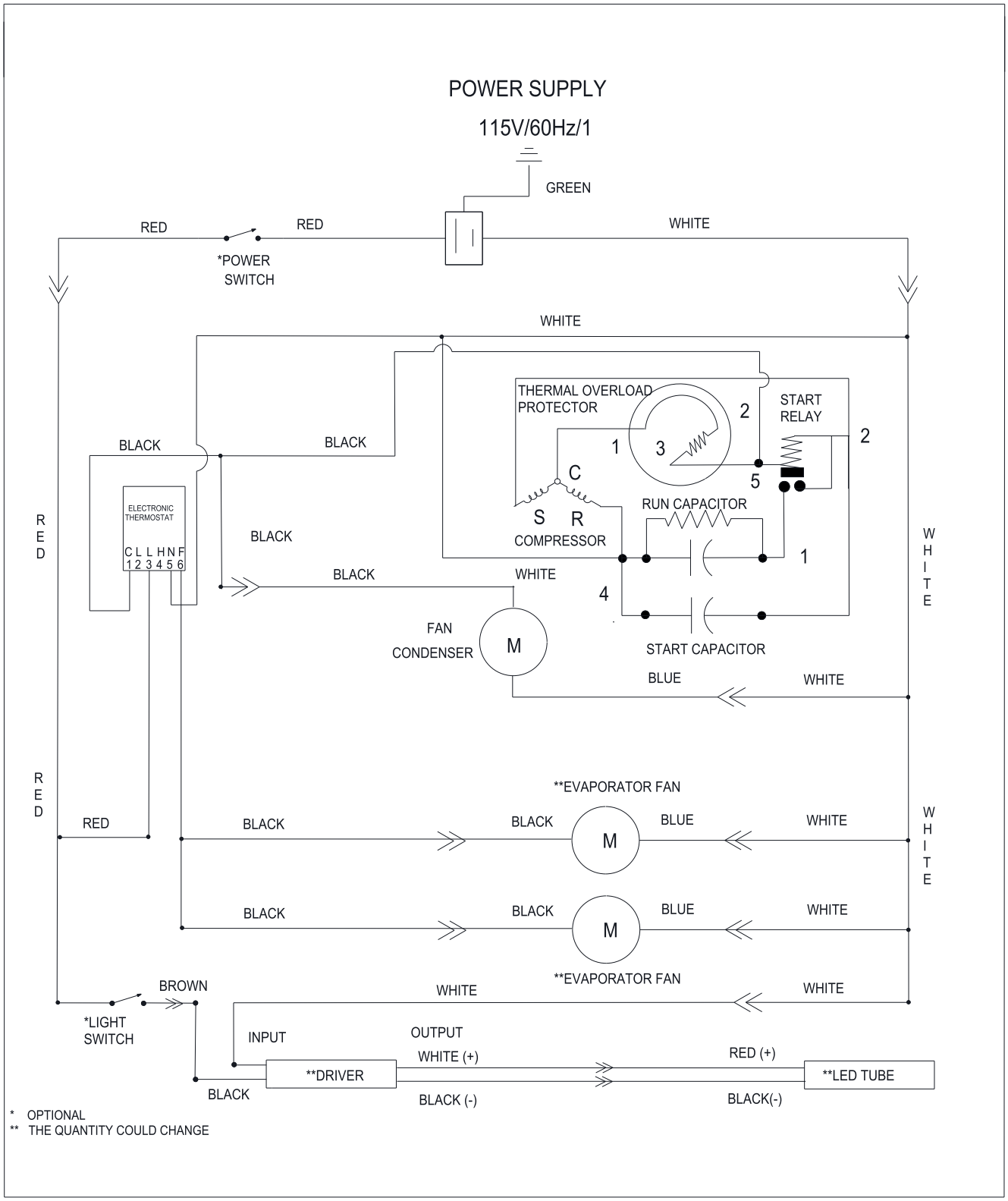

FOR THE SERVICE TECH - WIRING DIAGRAM FOR MT53 HINGED DOOR

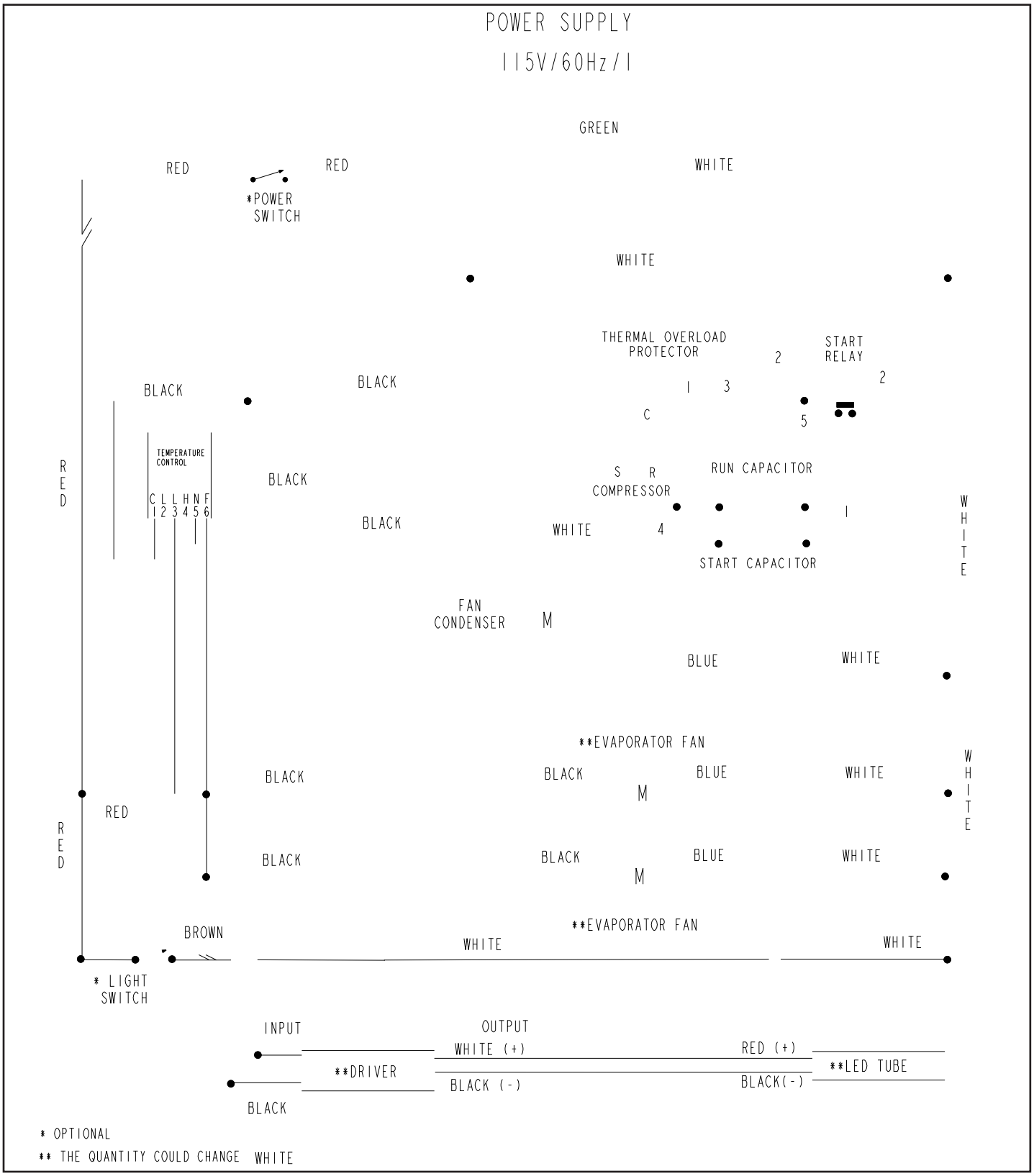

FOR THE SERVICE TECH - WIRING DIAGRAM FOR MT53 SLIDING DOOR

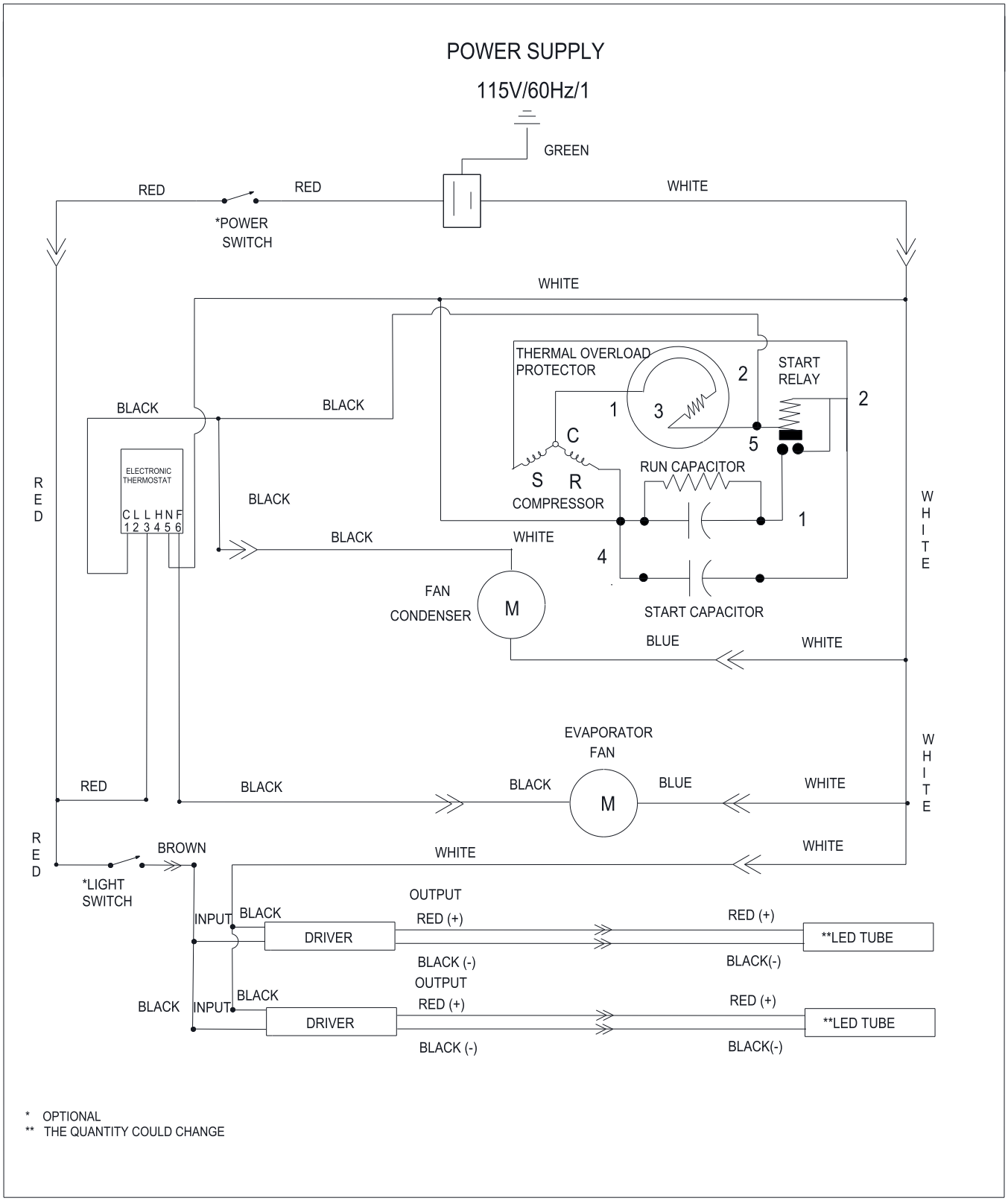

* OPTIONAL
** THE QUANTITY COULD CHANGE

FOR THE SERVICE TECH - WIRING DIAGRAM FOR MT72

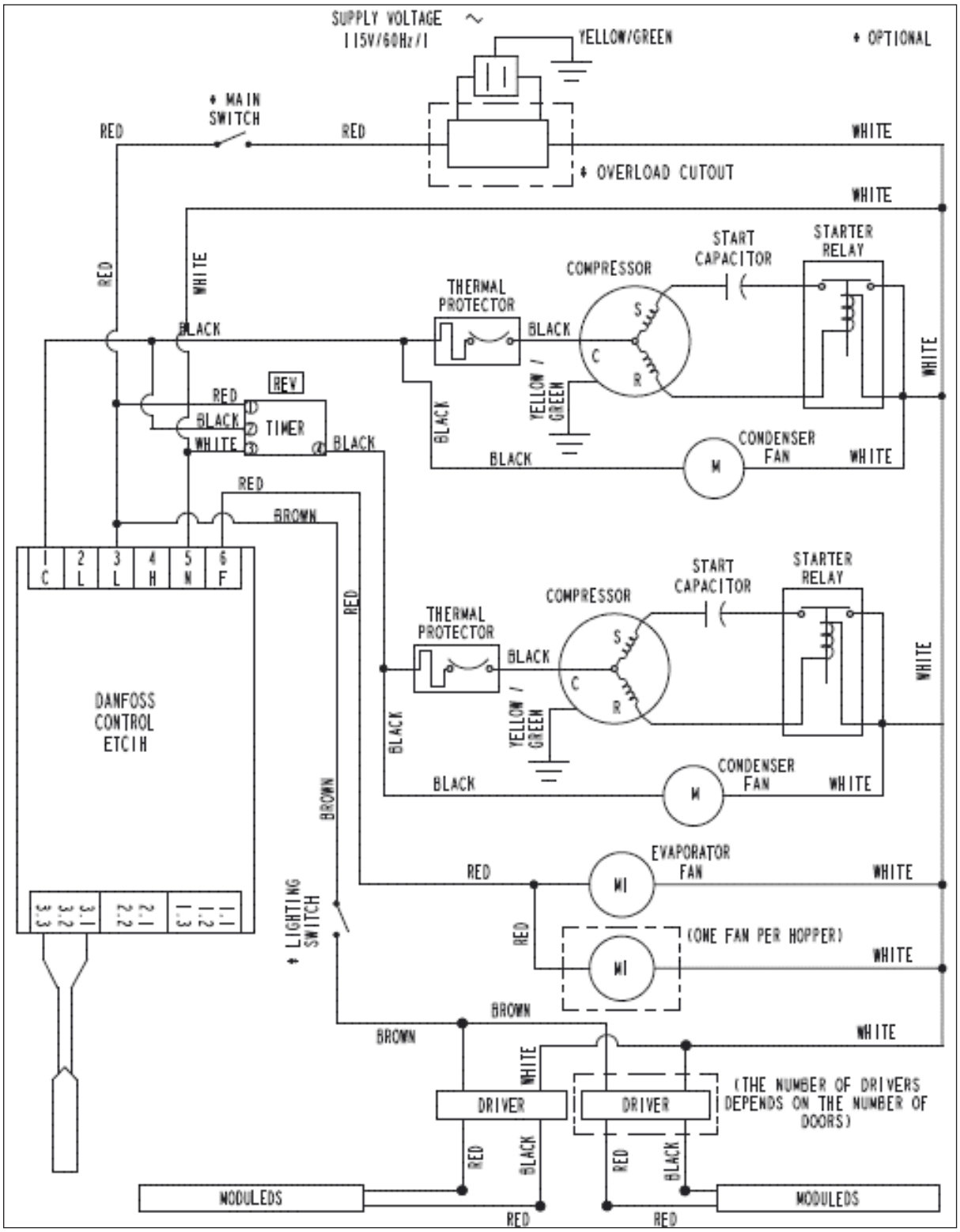

LIMITED WARRANTY

WARRANTY (Warranty valid in USA and Canada)

THREE (3) YEAR PARTS AND LABOR WARRANTY:

Beverage-Air Corporation warrants to the original purchaser of Beverage-Air branded equipment, including all parts thereof, that such equipment is free from defects in material and workmanship, under normal use, proper maintenance, and service as indicated by Beverage-Air installation and operation instructions, for a period of three (3) years from the date of installation, or thirty-nine (39) months from the date of shipment from the manufacturer, whichever is earlier.

ADDITIONAL TWO (2) YEAR COMPRESSOR PART WARRANTY*:

In addition to the warranty set forth above, Beverage-Air warrants the hermetically/semi-hermetically sealed compressor (part only) for an additional TWO (2) years beyond the first THREE (3) years warranty period; not to exceed sixty-three (63) months from the date of shipment from Beverage-Air, provided upon receipt of the compressor, manufacturer examination shows the sealed compressor to be defective. This extended warranty does not cover freight for the replacement compressor or freight for the return of the failed compressor.

* Units shipped after 07/01/2024. Previous warranty applies to units shipped prior.

EXCEPTIONS:

- CT96 and CF3 models carry a ONE (1) year parts and labor warranty, limited to fifteen (15) months from date of shipment from Beverage-Air. These are excluded from additional compressor warranty.
- SR/SF (Slate) models carry a TWO (2) year parts and labor warranty, limited to twenty-seven (27) months from date of shipment from Beverage-Air.
- BZ, VM, CDR, DPCR, MT and Blast Chillers carry a THREE (3) year parts and labor warranty; additional TWO (2) years compressor part only.
- Units installed in Residential applications will be not covered under this warranty. Units are intended for Commercial use only.

Also, this compressor-part only warranty does NOT apply to any electrical controls, condenser, evaporator, fan motors, overload switch, starting relay, capacitors, temperature control, filter/drier, accumulator, refrigeration tubing, wiring harness, labor charges, or supplies which are covered by the warranty above.

Note: 3rd party extended warranties are not covered by this warranty statement.

Normal wear parts, as deemed by Beverage-Air, such as but not exclusive to, light bulbs/lamps and gaskets are not covered by this warranty. For the purpose of this warranty, the original purchaser shall be deemed to mean the individual or company for who the product was originally installed.

Units that utilize variable speed compressor technology can experience nuisance tripping on Class A GFCI outlets which have a trip limit of 4 mA to 6 mA. To avoid this issue in a location that requires GFCI circuit protection, Beverage-Air & Victory recommends using a HUBBELL Model Number GFRST83W 20A Heavy Duty Hospital Grade Self-Test GFCI Receptacle. Nuisance tripping not covered under warranty.

Our obligation under this warranty shall be limited to repairing or replacing, including labor, any part of such product, which proves thus defective. Beverage-Air reserves the right to examine any product claimed to be defective and request photos of the unit prior to dispatching service. Moisture or water damage is not covered under warranty. If service is deemed non-warranty, Beverage-Air reserves the right to bill the end user for service.

The labor warranty shall be for self-contained units only and for standard straight time, which is defined as normal service rate time, for service performed during normal working hours. All warranty labor will be covered at standard time. Any service requested outside of a servicer's normal working hours including weekends and any additional overtime will be at the responsibility of the equipment purchaser. Any part or accessory determined to be defective in the product should be returned to the company within thirty (30) days under the terms of this warranty and must be accompanied by a record of the cabinet model, serial number, and identified with a return material authorization number (RMA#) issued by the manufacturer.

Special installation/applications, including remote locations, are limited in coverage by this warranty. Any installation that requires extra work, and/or travel, to gain access to the unit for service is the sole responsibility of the equipment purchaser.

Improper operation resulting from factors, including but not limited to, improper or negligent cleaning and maintenance, improper installation, low voltage conditions, inadequate wiring, outdoor use (unless otherwise specified) and accidental damage are not manufacturing defects and are strictly the responsibility of the purchaser.

LIMITED WARRANTY (CONT'D)

With the exception of Blast Chillers, the product is designed for maintaining temperature and not bringing food to a desired temperature and therefore cannot be held responsible for this function under warranty. Units must be in a conditioned environment or warranty will be void. Non-standard use of unit can also be subject to reduced or voided warranty.

Condensing coils must be cleaned at regular intervals as a part of preventative maintenance for optimal performance. Failure to do so is subject to a voided warranty. Although cleaning requirements vary in accordance with operation of various products, Beverage-Air recommends a minimum monthly cleaning.

NO CLAIMS CAN BE MADE AGAINST THIS WARRANTY FOR SPOILAGE OF FOOD, PRODUCTS, LOSS OF SALES OR CONSEQUENTIAL DAMAGES.

THE FOREGOING WARRANTIES ARE EXPRESSLY GIVEN IN LIEU OF ALL OTHER WARRANTIES, EXPRESS, IMPLIED, OR STATUTORY, INCLUDING THE IMPLIED WARRANTIES OF MERCHANTABILITY AND FITNESS FOR A PARTICULAR PURPOSE, WHICH ARE HEREBY DISCLAIMED, ALL OTHER OBLIGATIONS OR LIABILITIES ON OUR PART, AND WE NEITHER ASSUME, NOR AUTHORIZE ANY OTHER PERSON TO ASSUME FOR US, ANY OBLIGATION OR LIABILITY IN CONNECTION WITH THE SALE OF SAID REFRIGERATION UNITS OR ANY PARTS THERE OF.

This warranty shall not be assignable and shall be honored only in so far as the original purchaser. This warranty does not apply outside the limits of the United States of America and Canada, nor does it apply to any part that has been subject to misuse, neglect, alteration, accident, or to any damage caused by transportation, flood, fire, acts of terrorism, or acts of God.

LIMITATION OF LIABILITY:

Beverage-Air Corporation or their affiliates shall not be liable for any indirect, incidental, special or consequential damages, or losses of a commercial nature arising out of malfunction equipment or its parts components thereof, as a result of defects in material or workmanship.

THE ORIGINAL OWNER'S SOLE AND EXCLUSIVE REMEDY AND BEVERAGE-AIR'S SOLE AND EXCLUSIVE LIABILITY SHALL BE LIMITED TO THE REPAIR OR REPLACEMENT OF PARTS OR COMPONENTS CONTAINED IN THE EQUIPMENT IDENTIFIED ABOVE WHICH UNDER NORMAL USE AND SERVICE MALFUNCTION AS A RESULT OF DEFECTS IN MATERIAL OR WORKMANSHIP, SUBJECT TO THE APPLICABLE PROVISIONS AND LIMITATIONS STATED ABOVE.

Note: Additional Terms and Conditions of sale may apply. Notice: Specifications are subject to change without notice. Contact Beverage-Air for specific model agency approval. All prices are ex-works Brookville, PA. July 1, 2024

REPLACEMENT PARTS FOR MT08

GENERAL ASSEMBLY

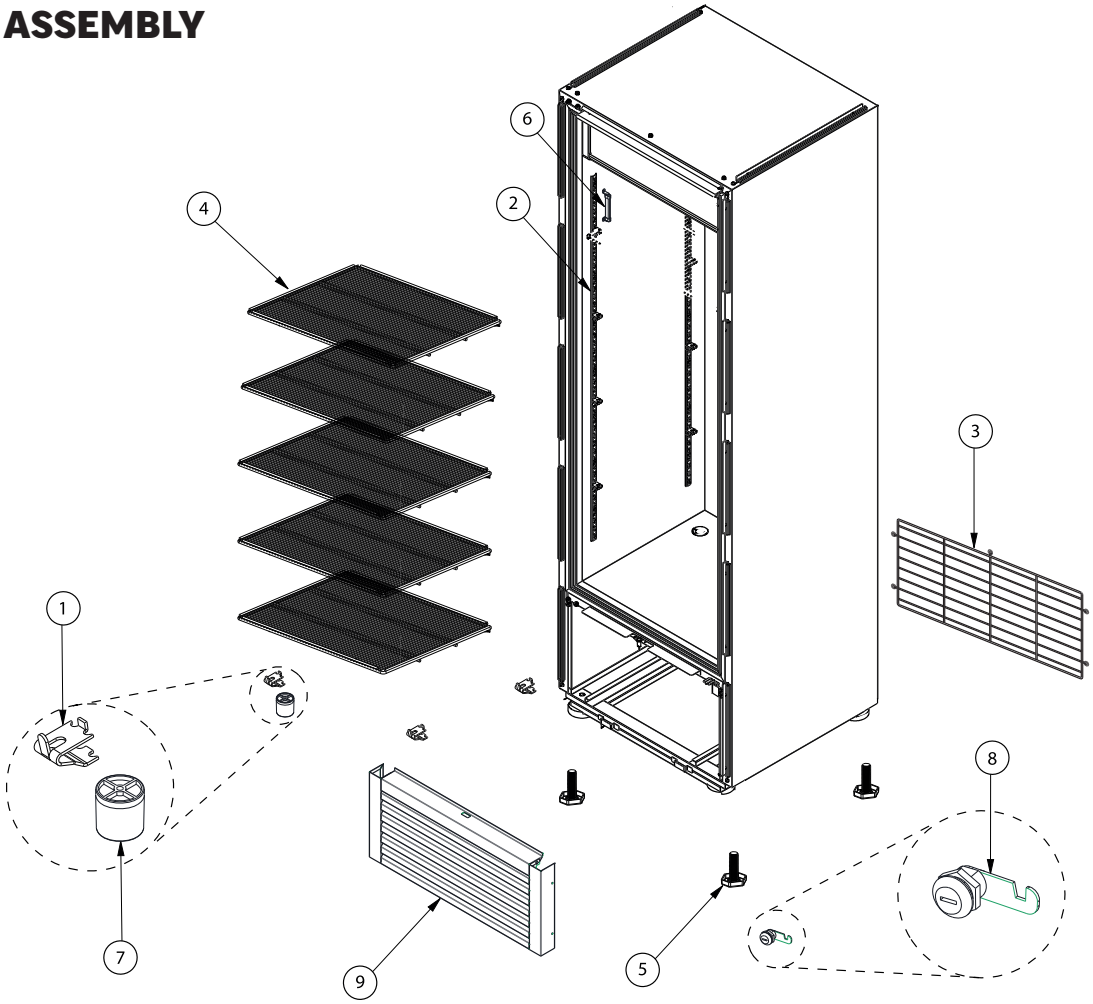

ITEM	SPARE PART CODE	DESCRIPTION
1	2045970	CLIP, F/PILASTER
2	2073980	PILASTER
3	2030058	REAR GRILL WIRE
4	2030064	SHELF
5	2016557	LEVELING SCREW
6	2016589	THERMOMETER
7	2020785	WALL SEPARATOR
8	2072772	MECHANICAL LOCKING
* 9A	2073978	BLACK METALLIC FRONT GRILL
* 9B	2073977	WHITE METALLIC FRONT GRILL

NOTES

Models with the same refrigeration system and operation condition are included in this manual

Drawings are an approximate representation of the reality

All accessories (shelves, clips, etc) are considerate from product base, extra items are not included

EVAPORATOR UNIT

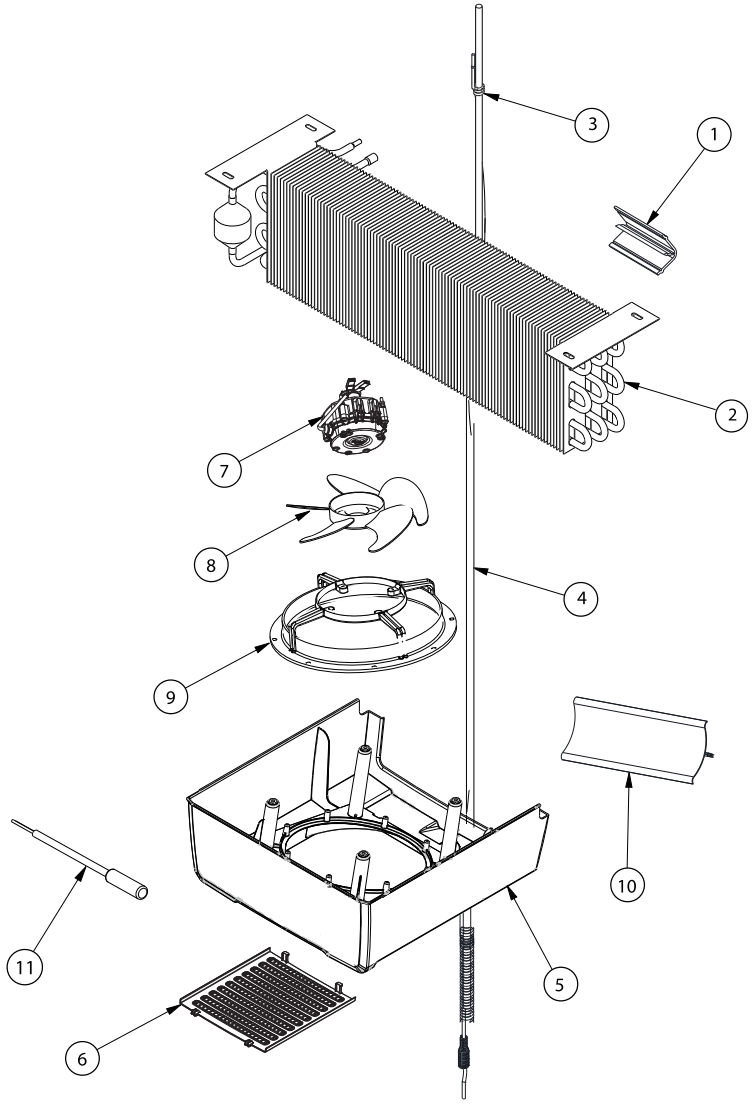

ITEM	SPARE PART CODE	DESCRIPTION
1	2034807	MOLD DEFLECTOR SUPPORT
2	2073985	EVAPORATOR
3	2065057	CAP PIPE, 0.049"X140" N/OM
4	2073246	RETURN PIPE, 1/4" 2.000M W/CAP G319 R2
5	2072763	EVAP HOUSING
6	2068676	GRILL, ABS FAN BLADE UL
7	2065108	EVAP FAN MOTOR, 16W 1800RPM
8	2021790	EVAP FAN BLADE, 8" Ø 28°
9	2021792	MOTOR EVAP SUPPORT
10	2072758	DEFLECTOR MOLDING
11	2056127	TEMPERATURE SENSOR

CONDENSER UNIT

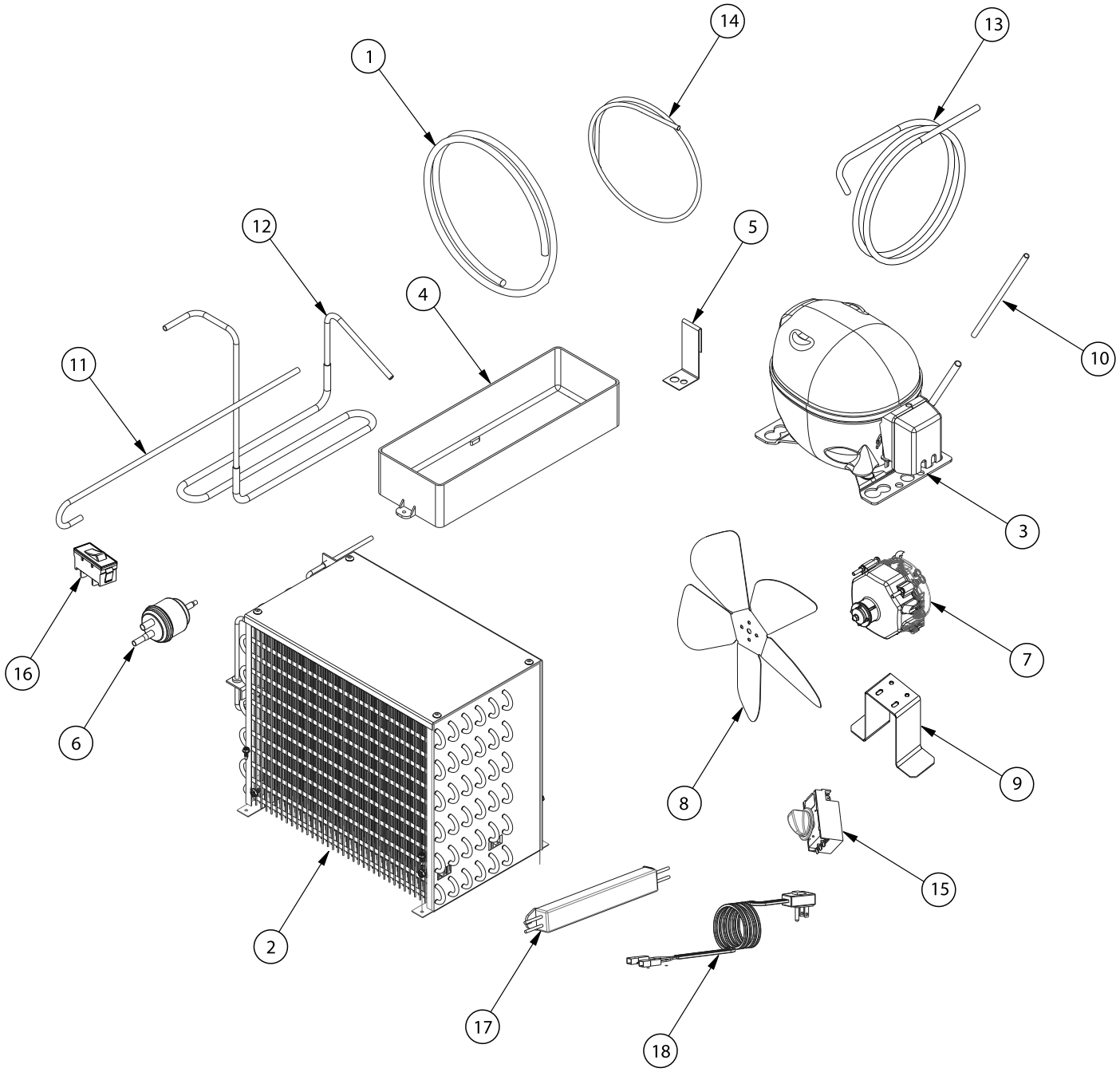

CONDENSER UNIT CONT'D

ITEM	SPARE PART CODE	DESCRIPTION
1	2036380	HOSE 18MM, 0.090M
2	2050115	CONDENSER
3	2073988	COMPRESSOR, EMC3130U
4	2016580	COND PAN
5	2045838	COND PAN SUPPORT
6	2065116	FILTER
7	2065322	COND FAN MOTOR, 16W 1800RPM
8	2021790	COND FAN BLADE, 8"Ø 28°
9	2073981	MOTOR COND SUPPORT
10	2072762	CHARGE PIPE
11	2063503	VACCUM PIPE
12	2073245	DISCHARGE PIPE
13	2073244	SUCTION PIPE
14	2061516	HOSE, 5/8" 0.45M
15	2065098	CONTROLLER
16	2016558	ROCKER SWITCH
17	2065129	LED DRIVER
18	2016559	POWER CORD
19	2074007	CONTROL HARNESS
20	2073989	COMPRESSOR HARNESS

DOOR

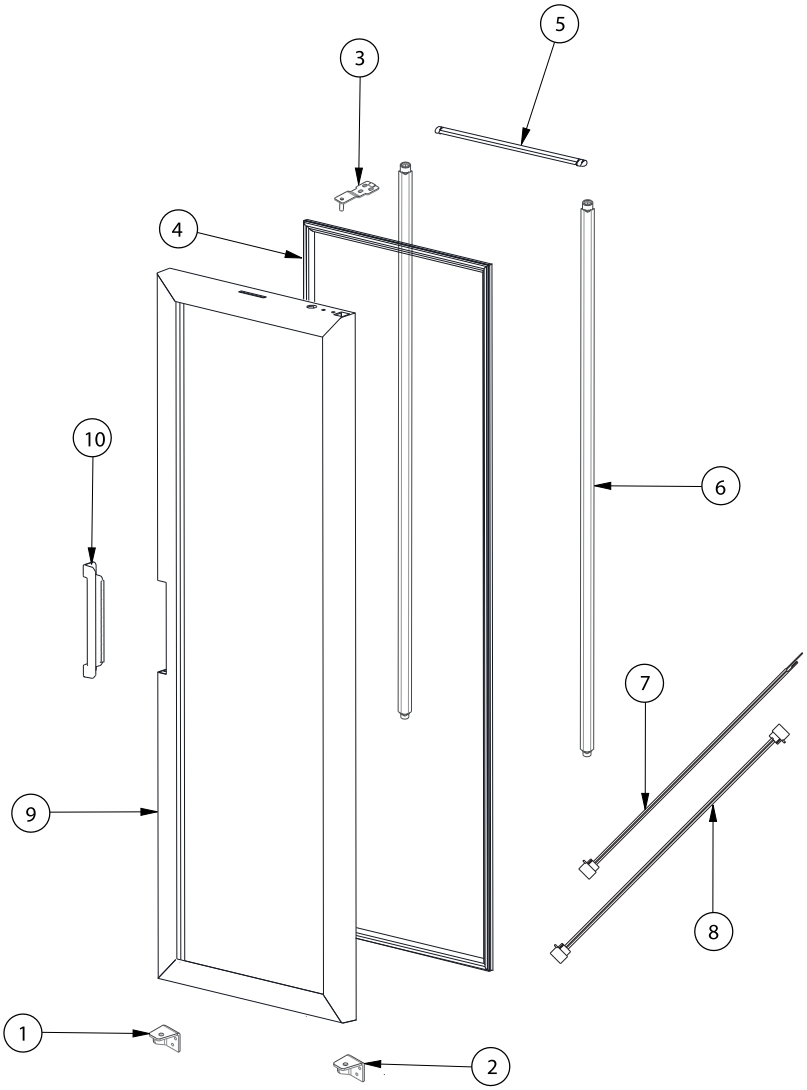

ITEM	SPARE PART CODE	DESCRIPTION
1	2068373	HINGE METALLIC
2	2068372	HINGE METALLIC
3	2060275	HINGE METALLIC
4	2021788	DOOR GASKET
5	2055502	6 LED MODULE
6	2073984	18 LED MODULE
7	2040476	F-M LED MODULE HARNESS
8	2068365	F-DRIVER LED MODULE HARNESS
* 9A		BLACK GLASS DOOR
* 9B		WHITE GLASS DOOR
* 10A	2073990	BLACK PLASTIC DOOR HANDLE
* 10B	2074004	WHITE PLASTIC DOOR HANDLE

REPLACEMENT PARTS FOR MT10

GENERAL ASSEMBLY

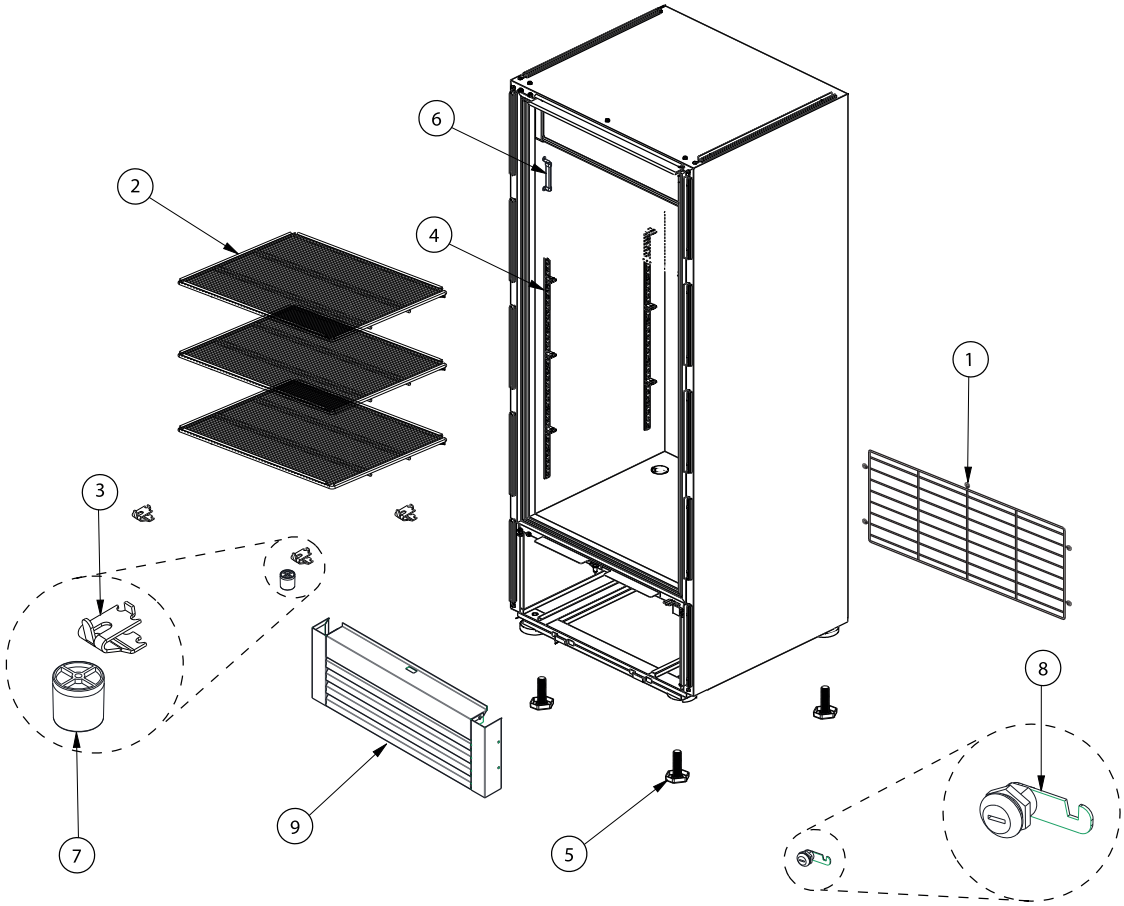

ITEM	PARE PART CODE	DESCRIPTION
1	2017168	GRILL, WIRE REAR
2	2017169	SHELF
3	2045970	CLIP, F/PILASTER
4	2072407	PILASTER
5	2016557	LEVELING SCREW
6	2065185	THERMOMETER
7	2020785	WALL SEPARATOR
8	2072772	MECHANICAL LOCKING
* 9A	2073976	WHITE METALLIC FRONT GRILL
* 9B	2073974	BLACK METALLIC FRONT GRILL

NOTES

Models with the same refrigeration system and operation condition are included in this manual

Drawings are an approximate representation of the reality

All accessories (shelves, clips, etc) are considerate from product base, extra items are not included

EVAPORATOR UNIT

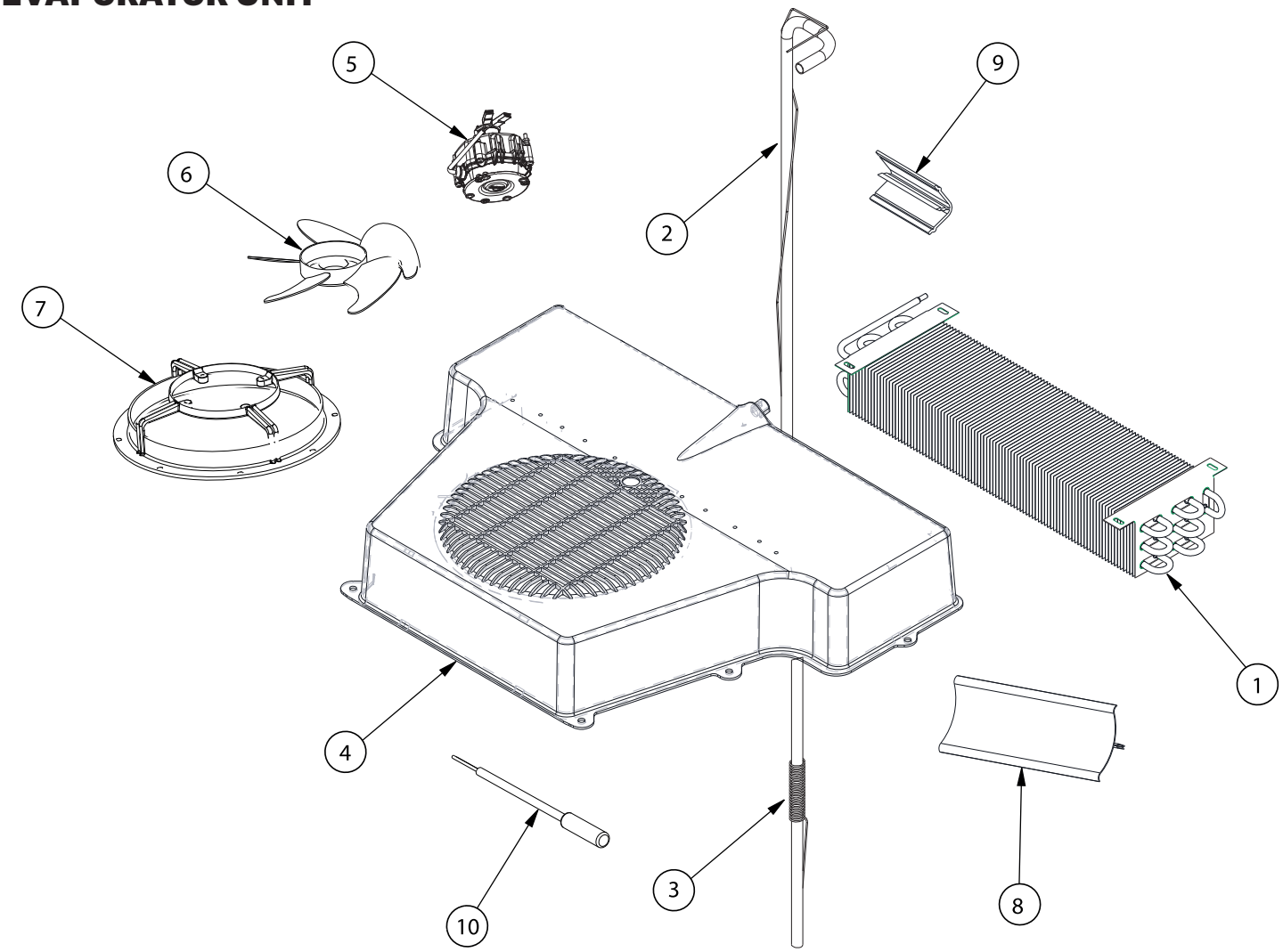

ITEM	SPARE PART CODE	DESCRIPTION
1	2065312	EVAPORATOR
2	2072415	HEAT EXCHANGER, CU VR10 R2 CC
3	2065056	CAP TUBE, 0.036"X96"
4	2017319	EVP HOUSING
5	2065108	EVAP FAN MOTOR, 13W 1400RPM
6	2021790	EVAP FAN BLADE, 8" Ø 28°
7	2021792	MOTOR EVAP SUPPORT
8	2034807	DEFLECTOR MOLDING
9		MOLD DEFLECTOR SUPPORT
10	2065182	TEMPERATURE SENSOR

CONDENSER UNIT

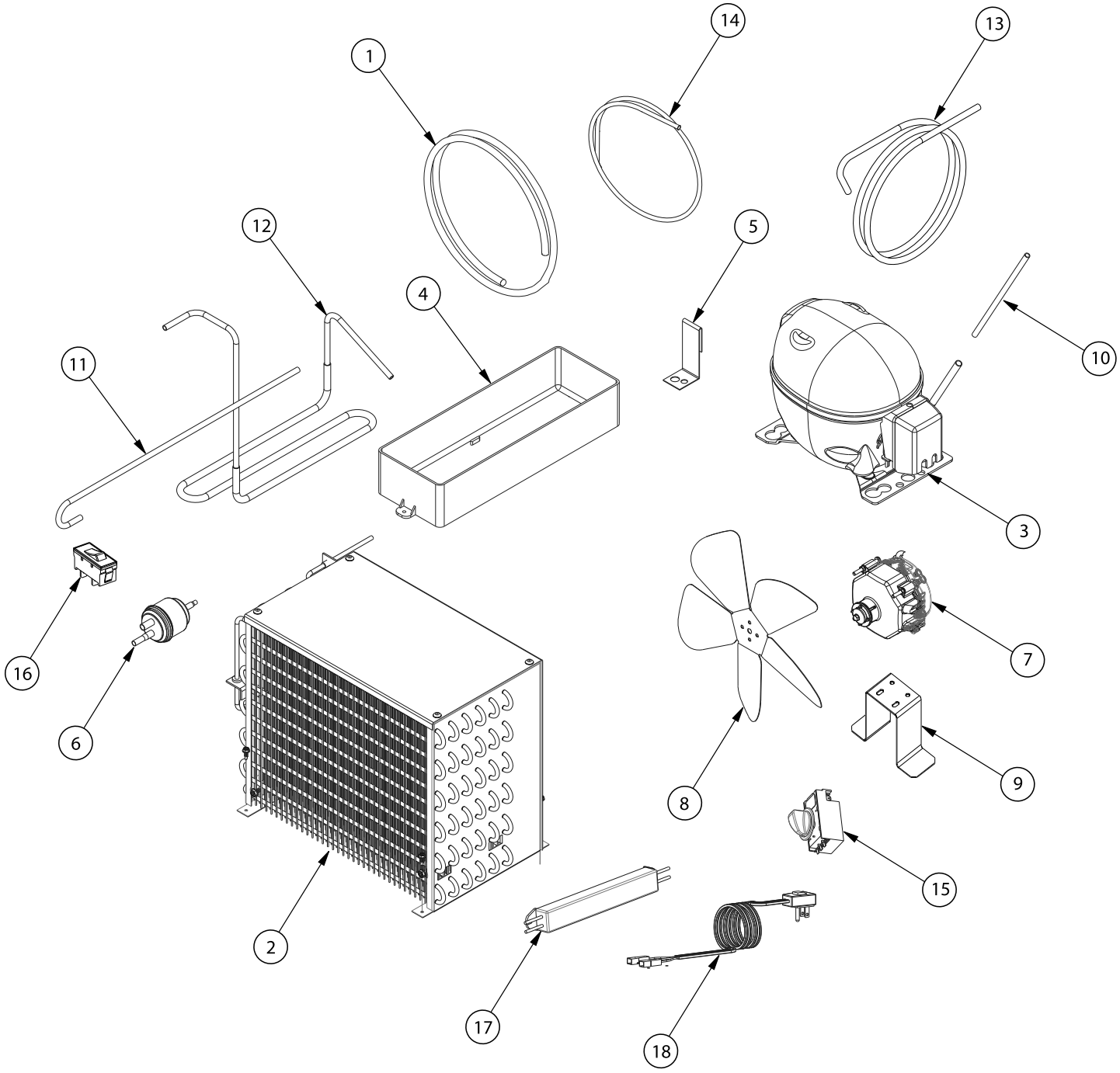

CONDENSER UNIT CONT'D

ITEM	SPARE PART CODE	DESCRIPTION
1	2036380	HOSE 18MM, 0.090M
2	2065074	CONDENSER
3	2065310	COMPRESSOR, EMC3130U
4	2016580	COND PAN
5	2045838	COND PAN SUPPORT
6	2065116	FILTER
7	2065322	COND FAN MOTOR, 16W 1800RPM
8	2021790	COND FAN BLADE, 8"Ø 28°
9	2055733	MOTOR COND SUPPORT
10	2063514	CHARGE PIPE
11	2063503	VACCUM PIPE
12	2065166	DISCHARGE PIPE
13	2065325	SUCTION PIPE
14	2061516	HOSE, 5/8" 0.45M
15	2065098	CONTROLLER
16	2016558	ROCKER SWITCH
17	2065129	LED DRIVER
18	2016559	POWER CORD
19	2068368	CONTROL HARNESS
20	2065329	COMPRESSOR HARNESS
21	2074006	LIGHTING HARNESS

DOOR

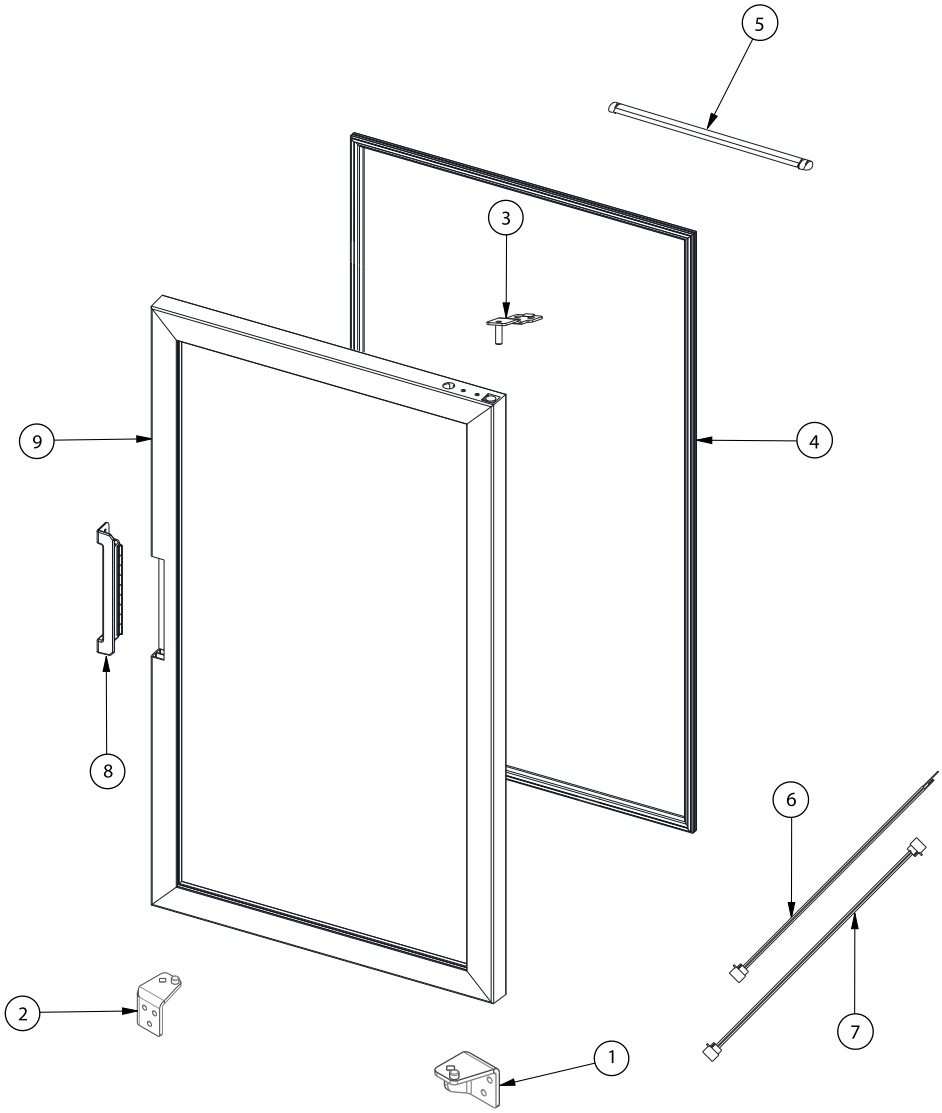

ITEM	SPARE PART CODE	DESCRIPTION
1	2068373	HINGE METALLIC
2	2068372	HINGE METALLIC
3	2060275	HINGE METALLIC
4	2054023	DOOR GASKET
5	2055502	6 LED MODULE
6	2040476	F-M LED MODULE HARNESS
7	2068365	F-DRIVER LED MODULE HARNESS
8	2068365	PLASTIC DOOR HANDLE
* 9A		BLACK GLASS DOOR
* 9B		WHITE GLASS DOOR

REPLACEMENT PARTS FOR MT12

GENERAL ASSEMBLY

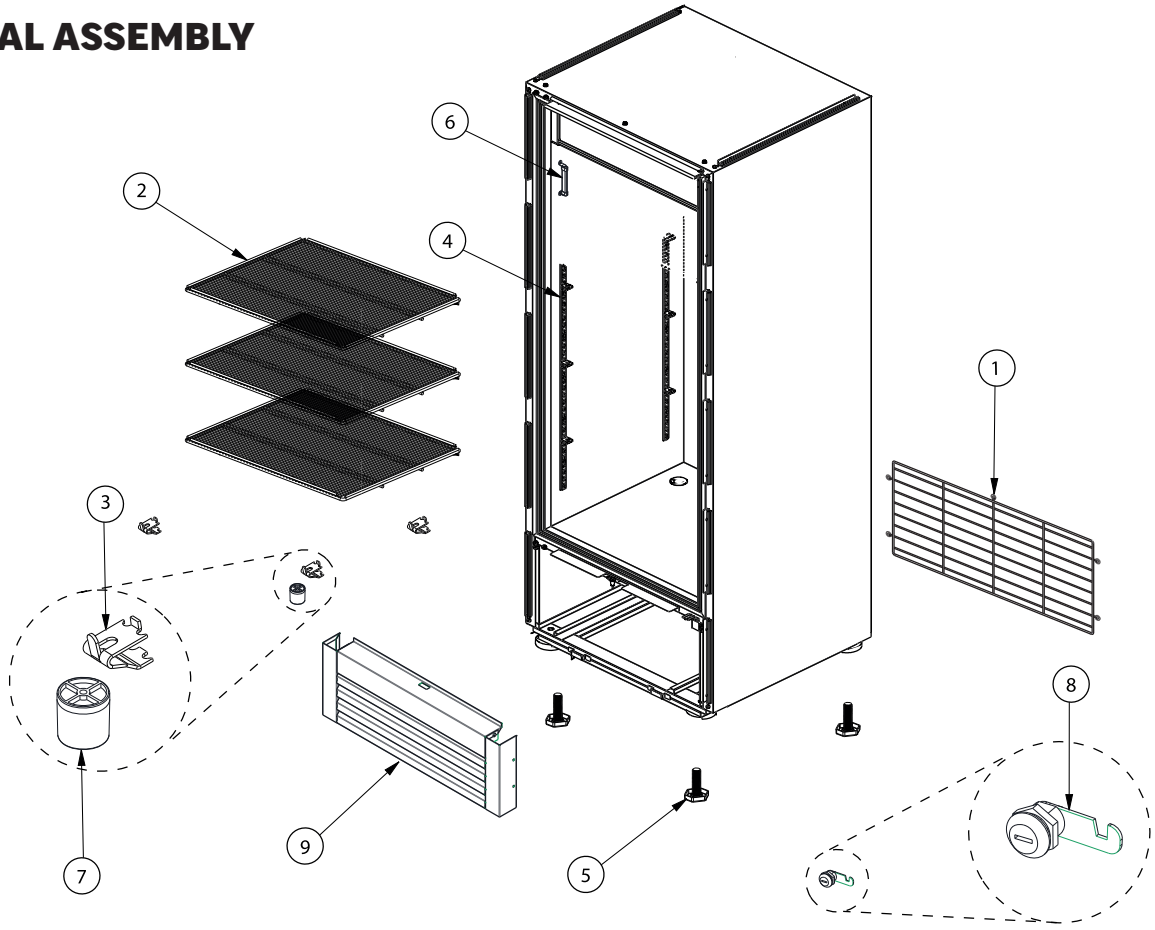

ITEM	SPARE PART CODE	DESCRIPTION
1	2017168	GRILL, WIRE REAR
2	2017169	SHELF
3	2045970	CLIP, F/PILASTER
4	2063491	PILASTER
5	2016557	LEVELING SCREW
6	2065185	THERMOMETER
7	2020785	WALL SEPARATOR
8	2072772	MECHANICAL LOCKING
* 9A	2073972	WHITE METALLIC FRONT GRILL
* 9B	2073973	BLACK METALLIC FRONT GRILL

NOTES

Models with the same refrigeration system and operation condition are included in this manual

Drawings are an approximate representation of the reality

All accessories (shelves, clips, etc) are considerate from product base, extra items are not included

EVAPORATOR UNIT

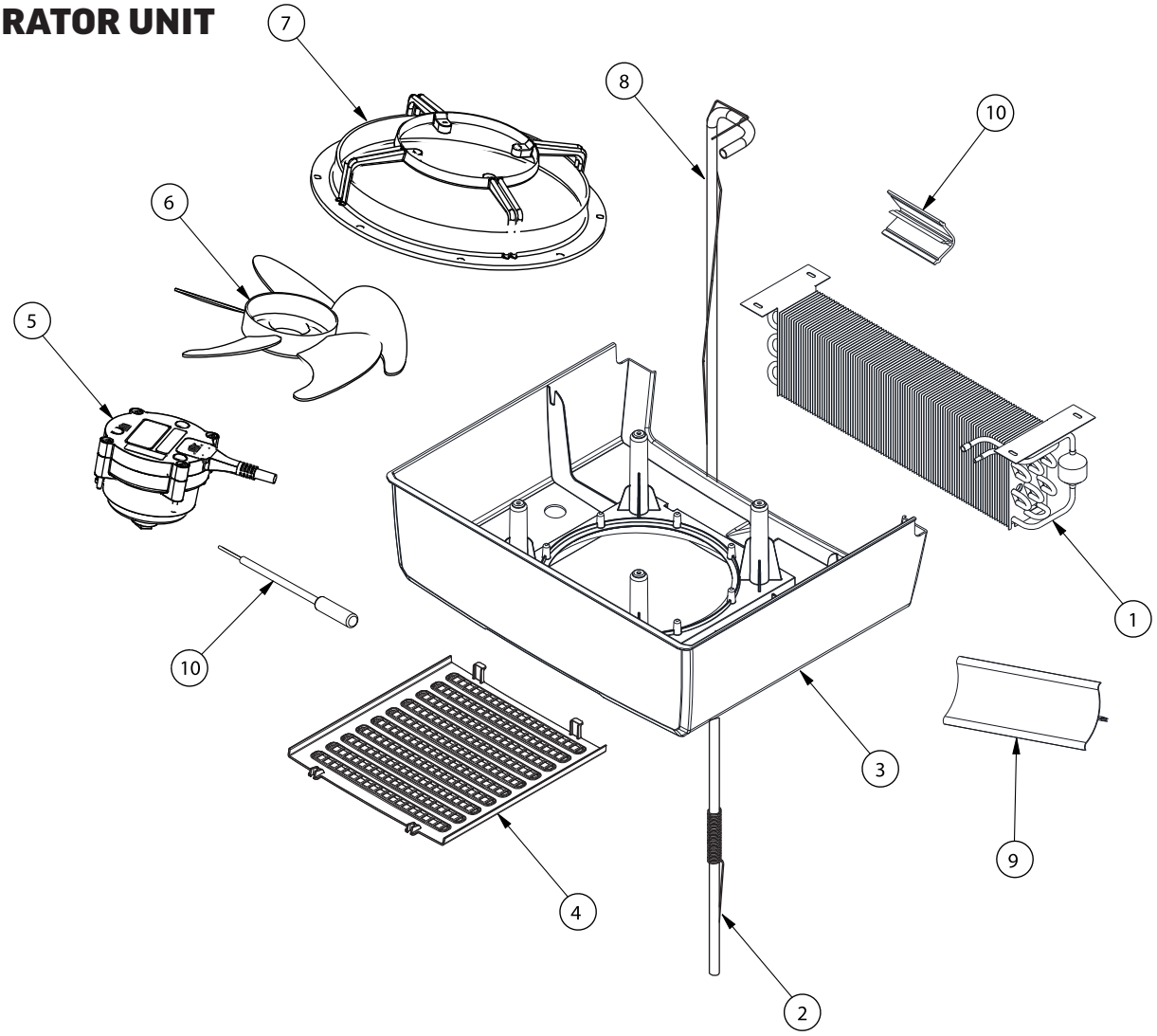

ITEM	SPARE PART CODE	DESCRIPTION
1	2068680	EVAPORATOR
2	2072765	HEAT EXCHANGER, CU VR12 R2 UL CC
3	2068682	EVAP HOUSING
4	2068676	GRILL, ABS FAN BLADE UL
5	2065107	EVAP FAN MOTOR, 13W 1800RPM
6	2021790	FAN BLADE, WEL PLA Ø8" 28°
7	2021792	MOTOR EVAP SUPPORT
8	2065057	CAP PIPE, 0.036"X120"
9	2072771	DEFLECTOR MOLDING
10	2034807	MOLD DEFLECTOR SUPPORT
11	2065182	TEMPERATURE SENSOR

CONDENSER UNIT

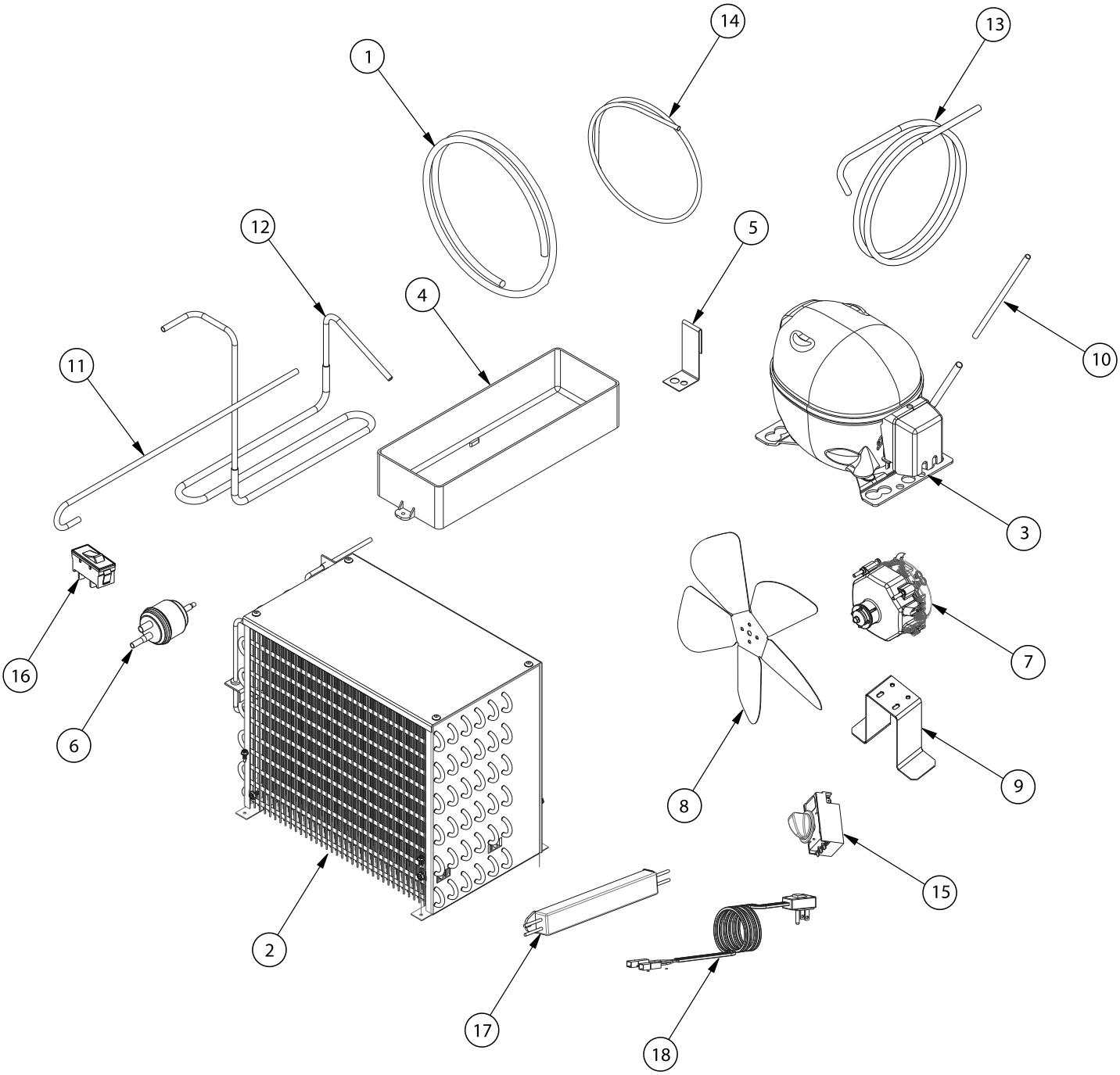

CONDENSER UNIT CONT'D

ITEM	SPARE PART CODE	DESCRIPTION
1	2036380	HOSE 18MM, 0.090M
2	2065074	CONDENSER
3	2063501	COMPRESSOR, EMC3130U
4	2016580	COND PAN
5	2045838	COND PAN SUPPORT
6	2065116	FILTER
7	2065107	COND FAN MOTOR, 16W 1800RPM
8	2021790	COND FAN BLADE, 8"Ø 28°
9	2055733	MOTOR COND SUPPORT
10	2063514	CHARGE PIPE
11	2063503	VACCUM PIPE
12	2063502	DISCHARGE PIPE
13	2063504	SUCTION PIPE
14	2061516	HOSE, 5/8" 0.45M
15	2074003	CONTROLLER
16	2016558	ROCKER SWITCH
17	2065129	LED DRIVER
18	2016559	POWER CORD
19	2063497	CONTROL HARNESS
20	2063493	COMPRESSOR HARNESS
21	2074006	LIGHTING HARNESS

DOOR

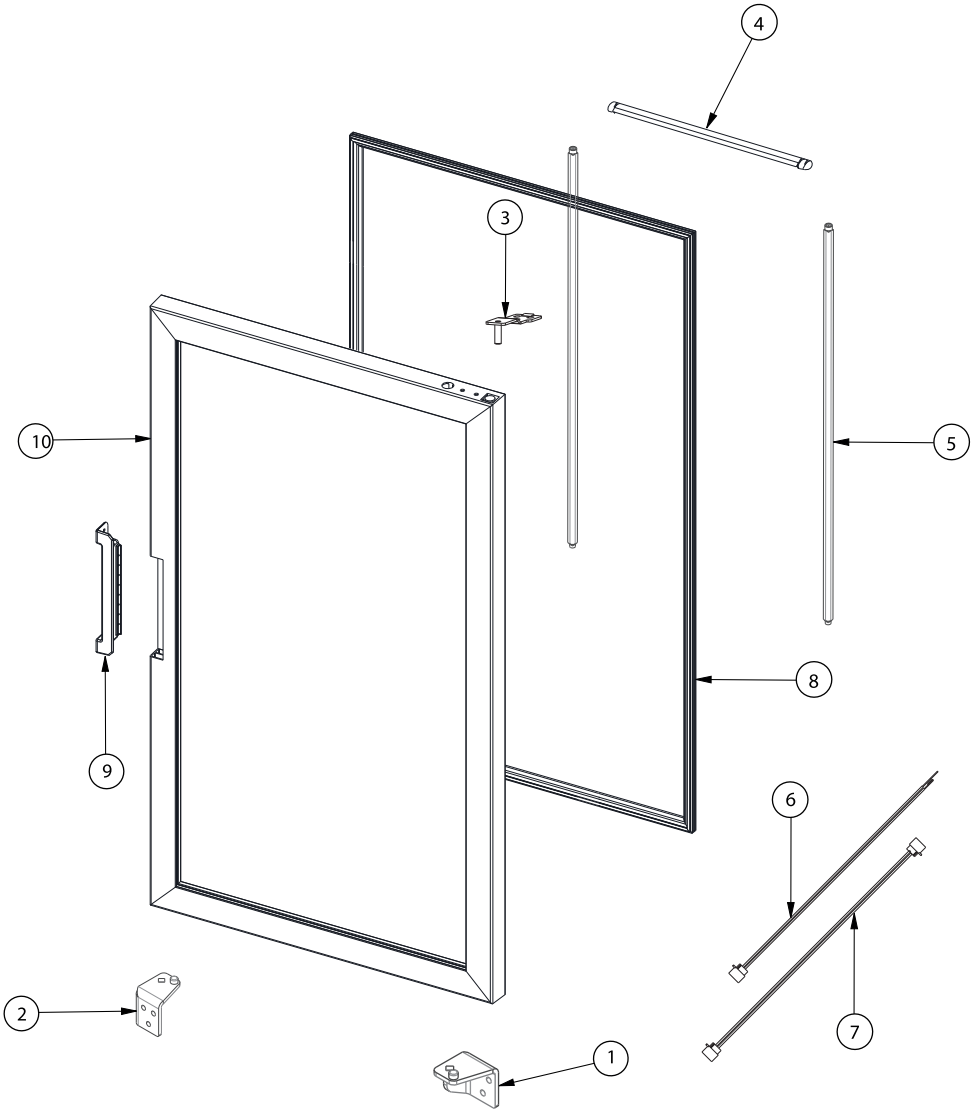

ITEM	SPARE PART CODE	DESCRIPTION
1	2068373	BOTTOM HINGE METALLIC
2	2068372	BOTTOM HINGE METALLIC
3	2016574	TOP HINGE METALLIC
4	2055502	6 LED MODULE
5	2073984	18 LED MODULE
6	2040476	F-M LED MODULE HARNESS
7	2068365	F-DRIVER LED MODULE HARNESS
8	2073979	DOOR GASKET
9	2074004	HANDLE DOOR
10A		WHITE GLASS DOOR
10B		BLACK GLASS DOOR

REPLACEMENT PARTS FOR MT23

GENERAL ASSEMBLY

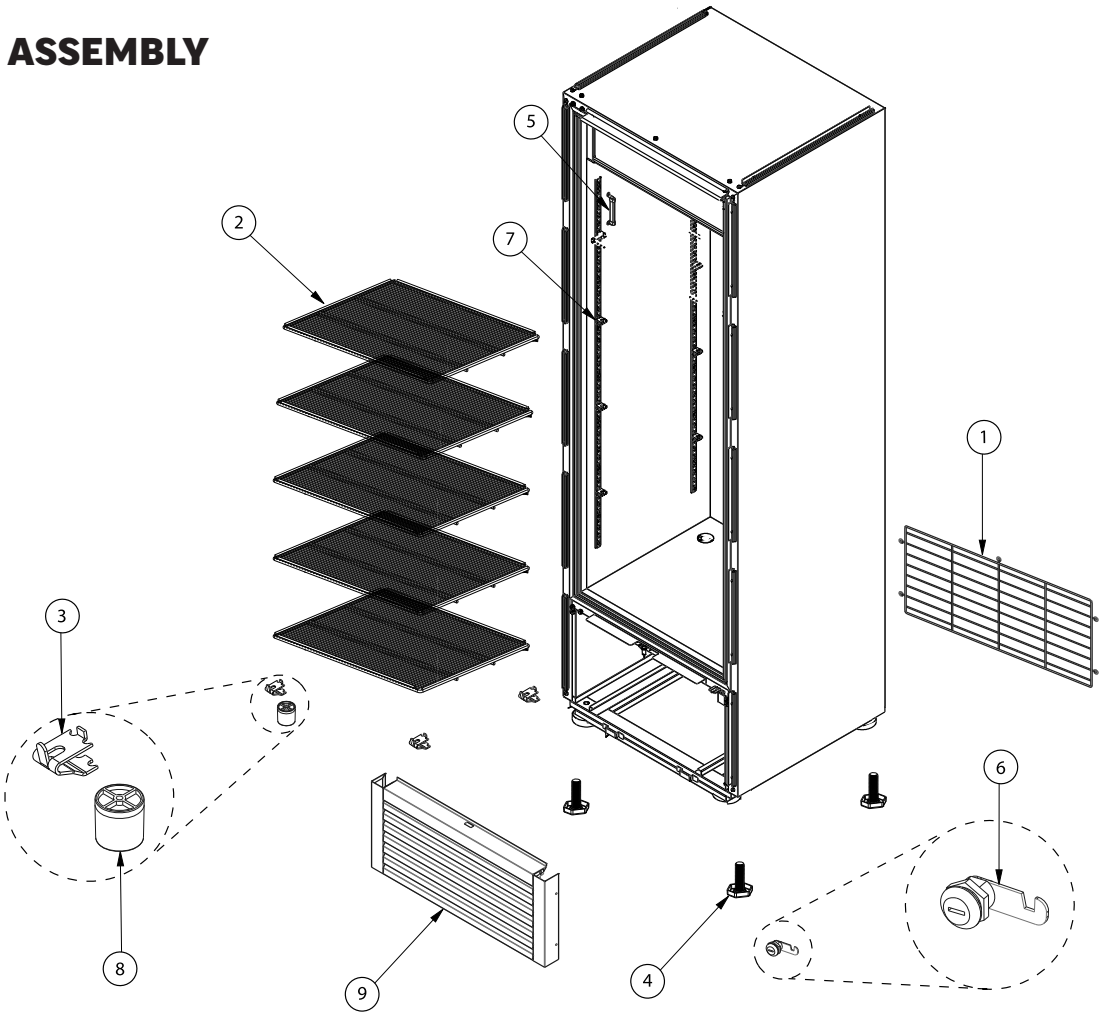

ITEM	SPARE PART CODE	DESCRIPTION
1	2017163	GRILL, WIRE REAR
2	2022624	SHELF
3	2045970	CLIP, F/PILASTER
4	2016557	LEVELING SCREW
5	2065185	THERMOMETER
6	2072772	MECHANICAL LOCKING
7	2061512	PILASTER
8	2020785	WALL SEPARATOR
* 9A	2073257	WHITE METALLIC FRONT GRILL
* 9B	2073440	BLACK METALLIC FRONT GRILL

NOTES

Models with the same refrigeration system and operation condition are included in this manual

Drawings are an approximate representation of the reality

All accessories (shelves, clips, etc) are considerate from product base, extra items are not included

EVAPORATOR UNIT

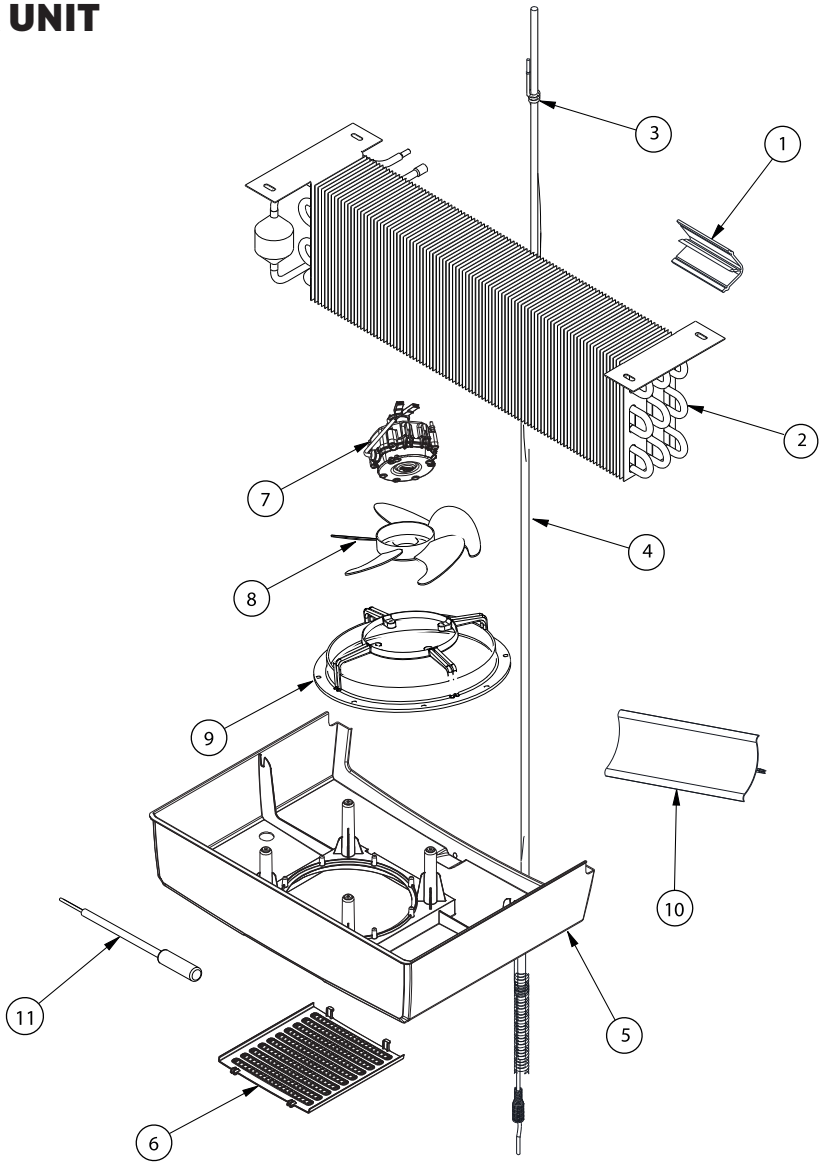

ITEM	SPARE PART CODE	DESCRIPTION
1	2034807	MOLD DEFLECTOR SUPPORT
2	2068674	EVAPORATOR
3	2073994	CAP PIPE, 0.049"X140" N/OM
4	2072768	RETURN PIPE, 1/4" 2.000M W/CAP G319 R2
5	2068675	EVAP HOUSING
6	2068676	GRILL, ABS FAN BLADE UL
7	2065107	EVAP FAN MOTOR, 16W 1800RPM
8	2021792	EVAP FAN BLADE, 8" Ø 28°
9	2016756	MOTOR EVAP SUPPORT
10	2072764	DEFLECTOR MOLDING
11	2056127	TEMPERATURE SENSOR

CONDENSER UNIT

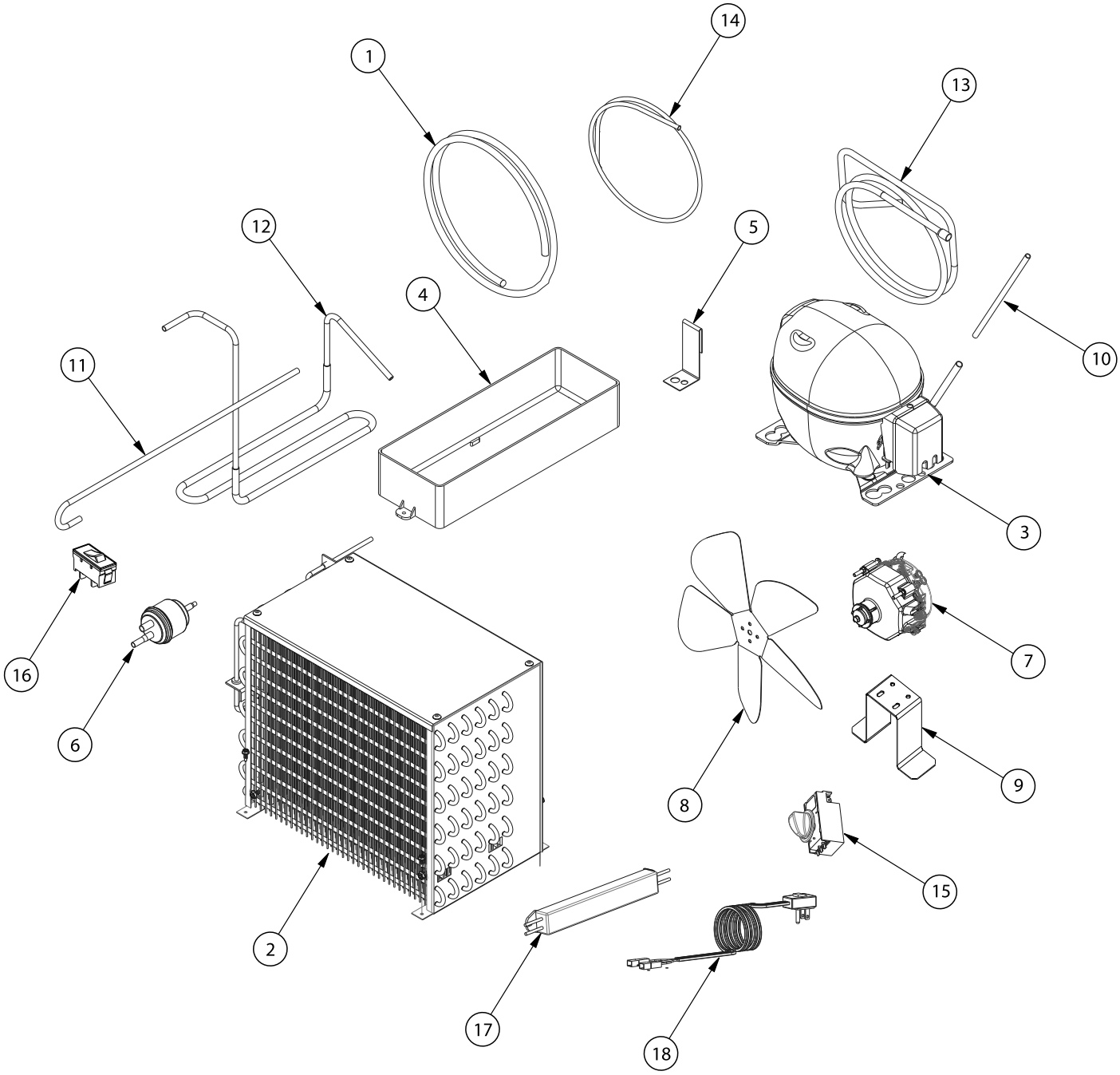

CONDENSER UNIT CONT'D

ITEM	SPARE PART CODE	DESCRIPTION
1	2036380	HOSE 18MM, 0.090M
2	2061514	CONDENSER
3	2072402	COMPRESSOR, EMC3130U
4	2017314	COND PAN
5	2045838	COND PAN SUPPORT
6	2055229	FILTER
7	2065335	COND FAN MOTOR, 16W 1800RPM
8	2061515	COND FAN BLADE, 8"Ø 28°
9	2068679	MOTOR COND SUPPORT
10	2063514	CHARGE PIPE
11	2063518	VACCUM PIPE
12	2073255	DISCHARGE PIPE
13	2073256	SUCTION PIPE
14	2061516	HOSE, 5/8" 0.45M
15	2065098	CONTROLLER
16	2016558	ROCKER SWITCH
17	2065129	LED DRIVER
18	2016559	POWER CORD
19	2068367	CONTROL HARNESS
20	2068370	COMPRESSOR HARNESS
21	2073986	LIGHTING HARNESS

DOOR

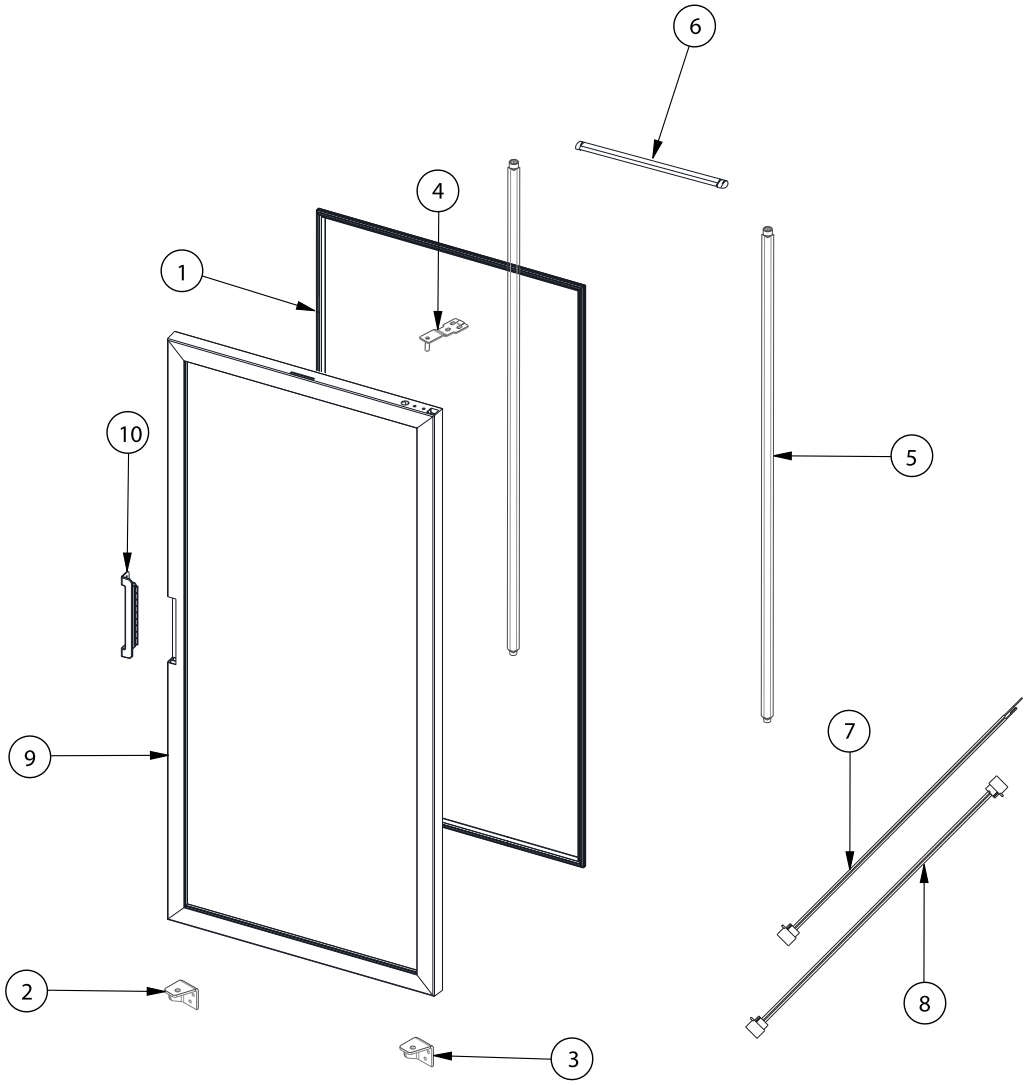

ITEM	SPARE PART CODE	DESCRIPTION
1	2022626	DOOR GASKET
2	2022626	HINGE METALLIC
3	2068373	HINGE METALLIC
4	2068372	HINGE METALLIC
5	2016574	24 LED MODULE
6	2055502	6 LED MODULE
7	2055502	H-M LED MODULE HARNESS
8	2040476	F-M LED MODULE HARNESS
* 9A		WHITE GLASS DOOR
* 9B		BLACK GLASS DOOR
* 10A	2074004	WHITE PLASTIC DOOR HANDLE
* 10B	2073990	BLACK PLASTIC DOOR HANDLE

REPLACEMENT PARTS FOR MT49 HINGED DOOR

GENERAL ASSEMBLY

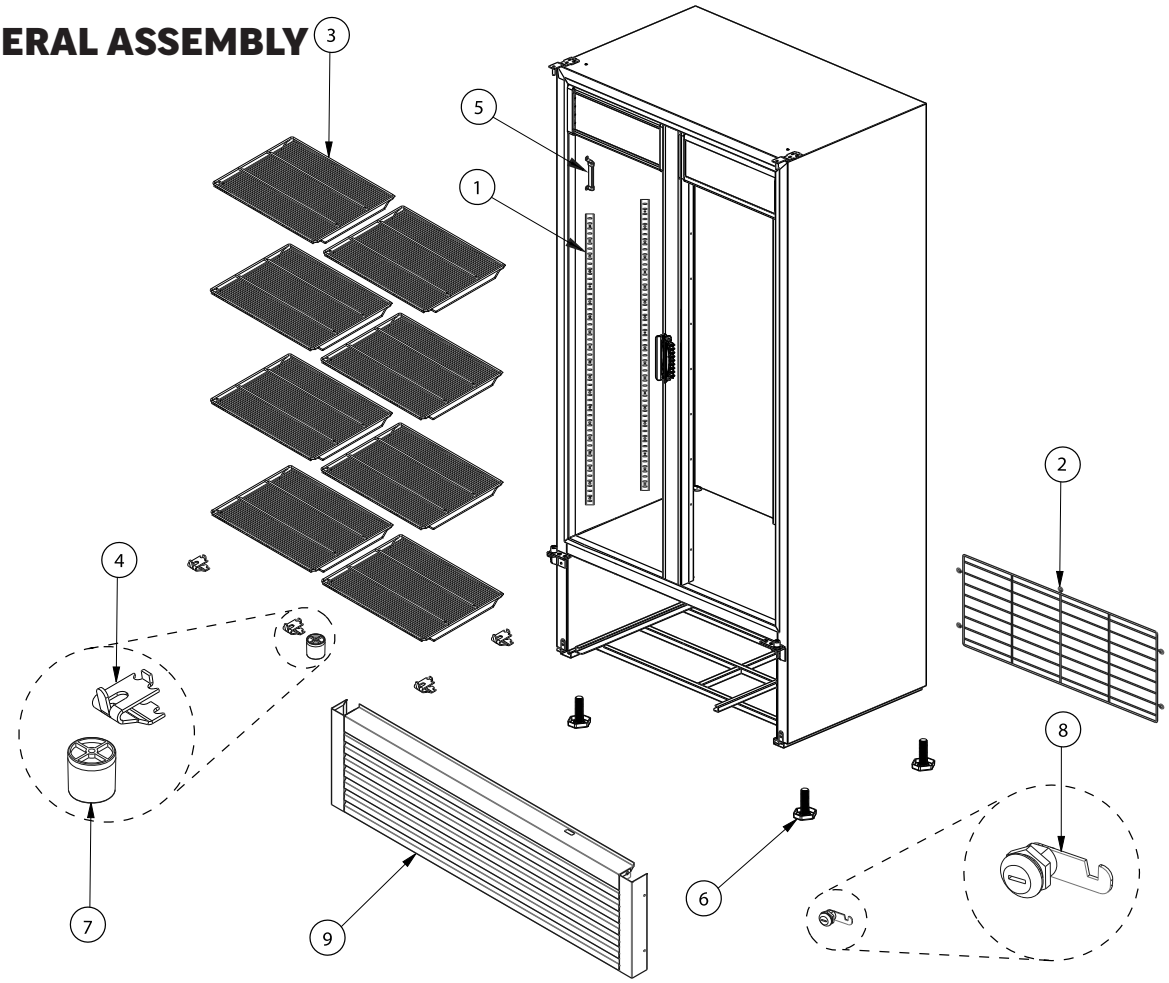

ITEM	SPARE PART CODE	DESCRIPTION
1	2061512	PILASTER
2	2026656	GRILL, WIRE REAR
3	2026667	SHELF
4	2045970	CLIP, F/PILASTER
5	2016589	THERMOMETER
6	2016557	LEVELING SCREW
7		WALL SEPARATOR
8	2020785	MECHANICAL LOCKING
9A		BLACK METALLIC FRONT GRILL
9B		WHITE METALLIC FRONT GRILL

NOTES

Models with the same refrigeration system and operation condition are included in this manual

Drawings are an approximate representation of the reality

All accessories (shelves, clips, etc) are considerate from product base, extra items are not included

EVAPORATOR UNIT

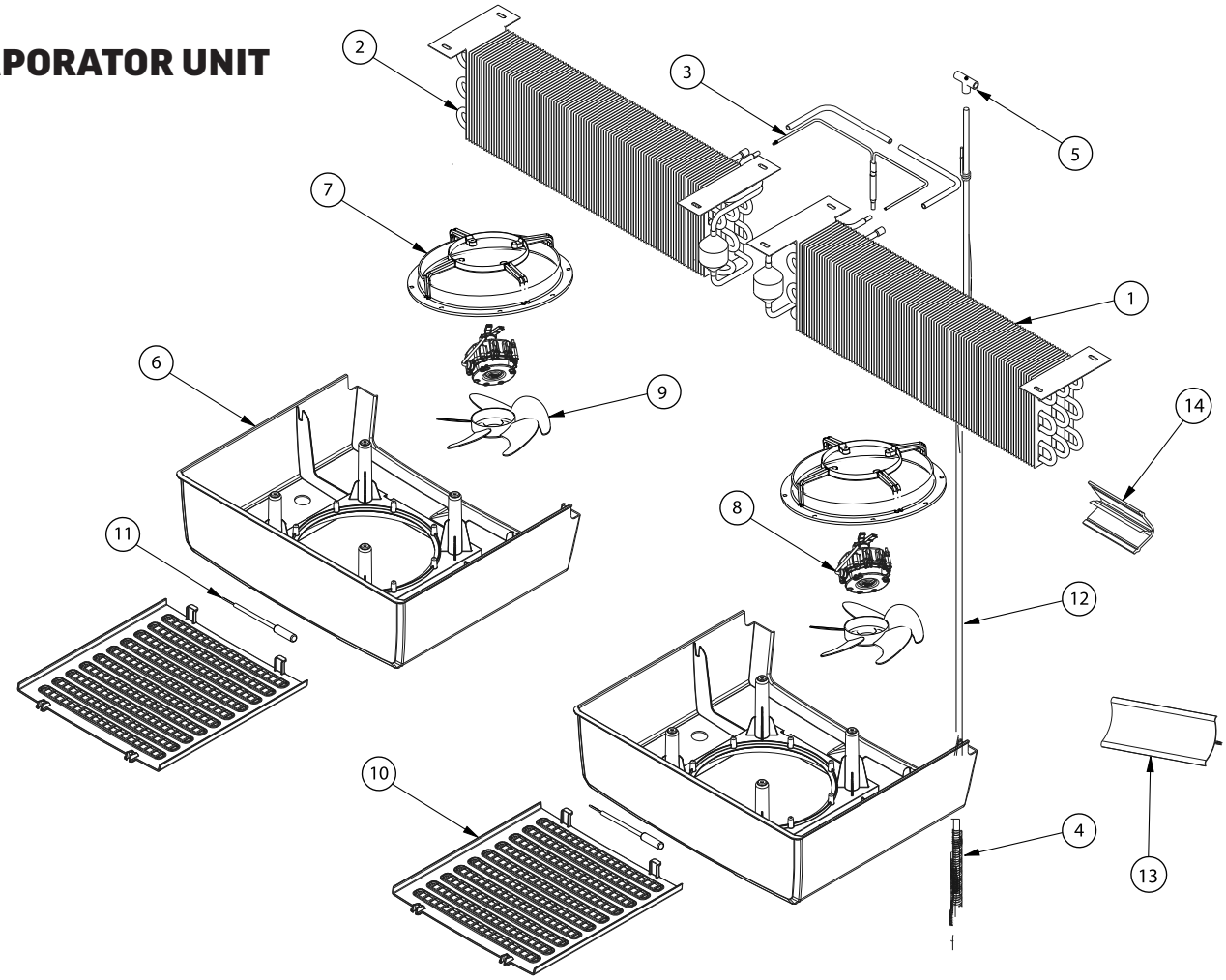

ITEM	SPARE PART CODE	DESCRIPTION
1	2068680	RIGHT EVAPORATOR
2	2068681	LEFT EVAPORATOR
3	2065334	DISTRIBUTION PIPE
4		CAP PIPE, 0.055"X144" N/OM
5	2056957	COPPER T 1/4"
6	2068682	EVAP HOUSING
7	2016756	MOTOR EVAP SUPPORT
8	2065335	EVAP FAN MOTOR, 16W 1800RPM
9		EVAP FAN BLADE, 8" Ø 28°
10	2068676	GRILL, ABS FAN BLADE UL
11	2056127	TEMPERATURE SENSOR
12		RETURN PIPE, 1/4" 1.810M W/CAP VRD43 R2
13		DEFLECTOR MOLDING
14	2034807	MOLD DEFLECTOR SUPPORT

CONDENSER UNIT

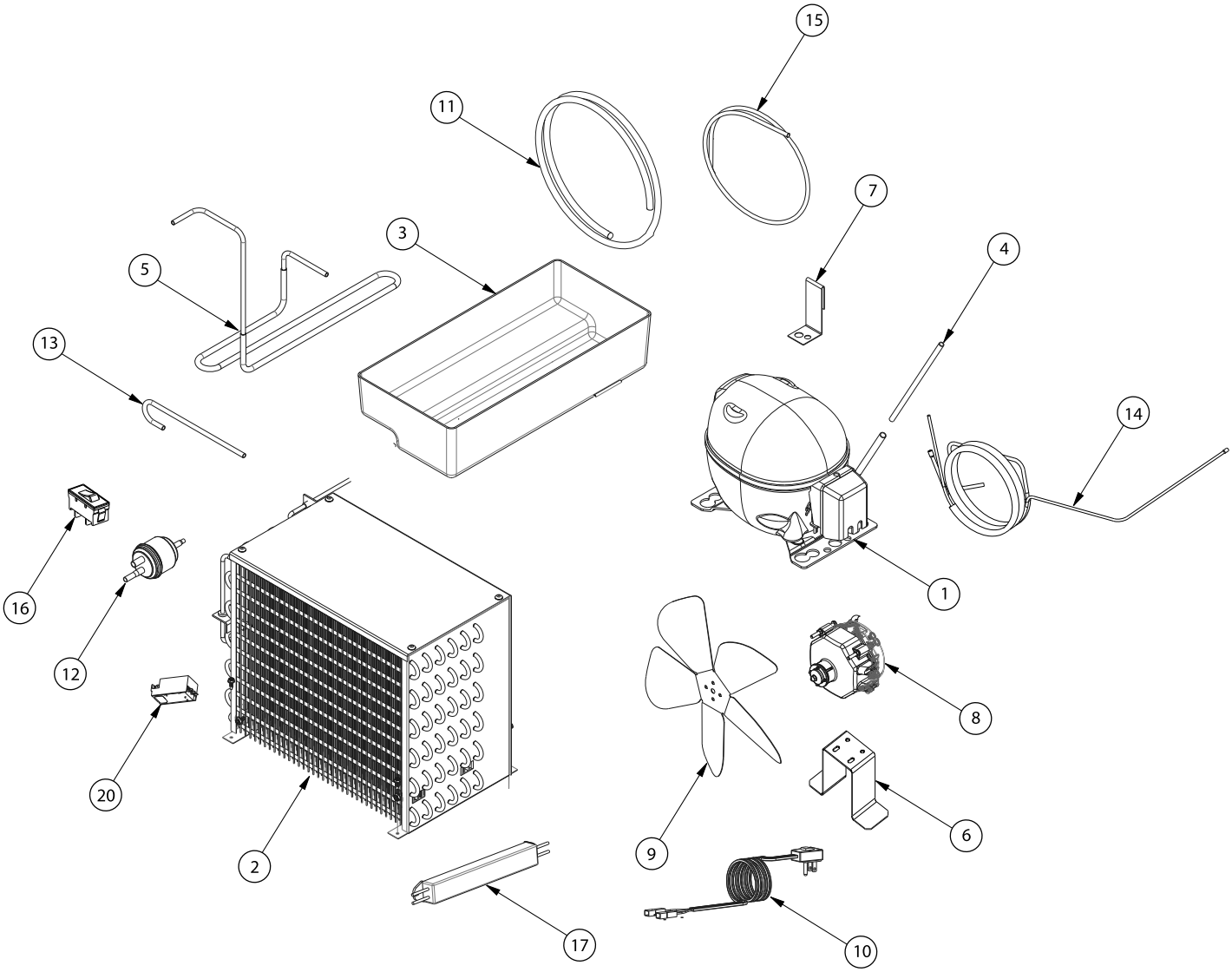

CONDENSER UNIT CONT'D

ITEM	SPARE PART CODE	DESCRIPTION
1		COMPRESSOR, EMC3134U
2	2056133	CONDENSER
3	2024707	COND PAN
4	2063514	CHARGE PIPE
5		DISCHARGE PIPE
6	2068684	MOTOR COND SUPPORT
7		COND PAN SUPPORT
8	2065335	COND FAN MOTOR, 16W 1800RPM
9	2061515	COND FAN BLADE, 8 3/4" Ø25°
10	2016559	POWER CORD
11	2036380	HOSE 18MM, 0.090M
12	2055229	FILTER
13		VACCUM PIPE
14		HEAT EXCHANGER
15	2061516	HOSE, 5/8" 0.45M
16	2016558	ROCKER SWITCH
17	2065129	LED DRIVER
18	2068369	CONTROL HARNESS
19		COMPRESSOR HARNESS
20	2065364	CONTROLLER
21		LIGHTING HARNESS

DOOR

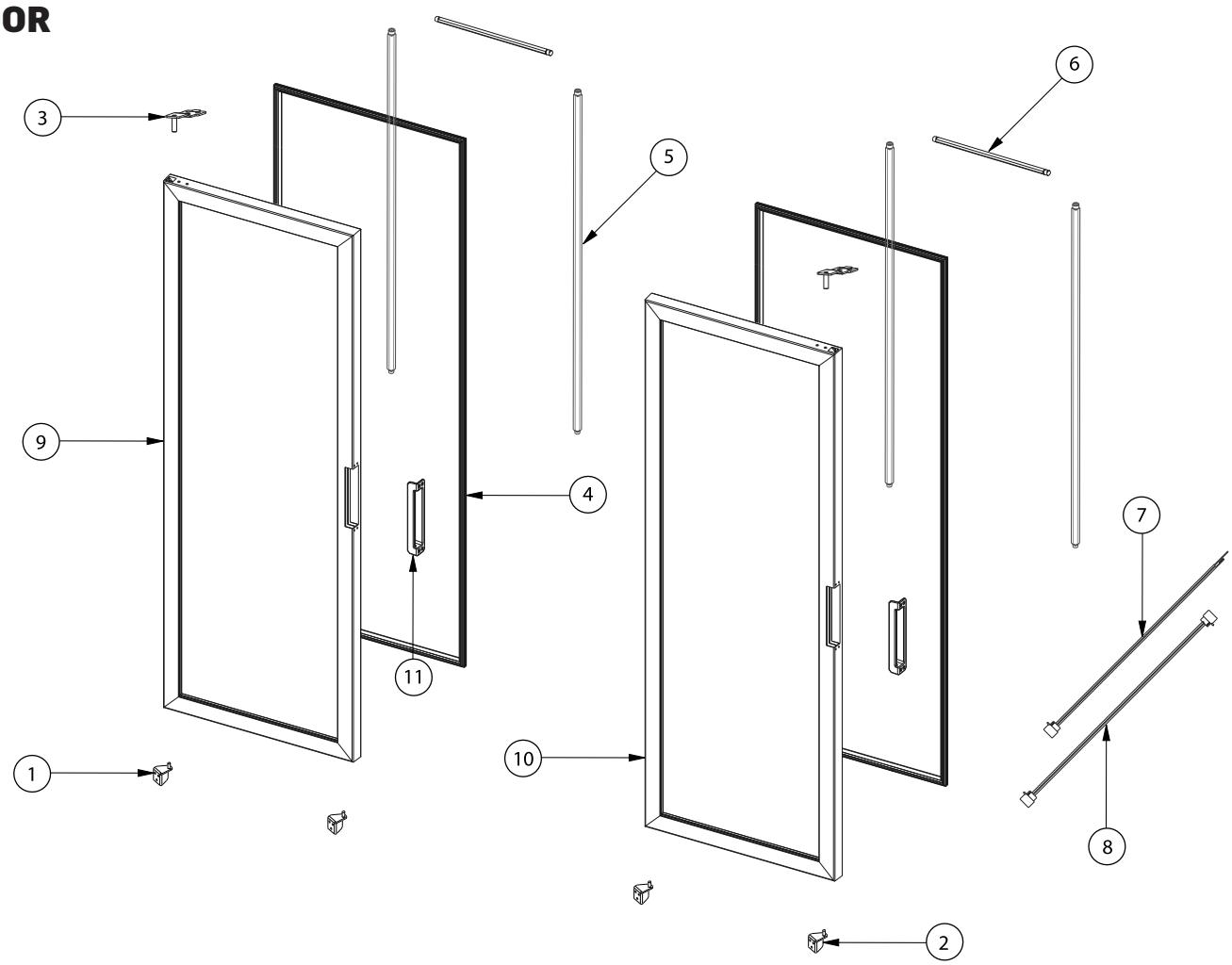

ITEM	SPARE PART CODE	DESCRIPTION
1	2068373	BOTTOM HINGE METALLIC
2	2068372	BOTTOM HINGE METALLIC
3	2016574	TOP HINGE METALLIC
4		DOOR GASKET
5		18 LED MODULE
6	2055502	6 LED MODULE
7	2040476	F-M LED MODULE HARNESS
8	2040477	ARNES H-DRIVER MODULED
* 9A		BLACK RIGHT GLASS DOOR
* 9B		WHITE RIGHT GLASS DOOR
* 10A		BLACK LEFT GLASS DOOR
* 10B		WHITE LEFT GLASS DOOR
* 11A		BLACK PLASTIC DOOR HANDLE
* 11B		WHITE PLASTIC DOOR HANDLE

REPLACEMENT PARTS FOR MT49 SLIDING DOOR

GENERAL ASSEMBLY

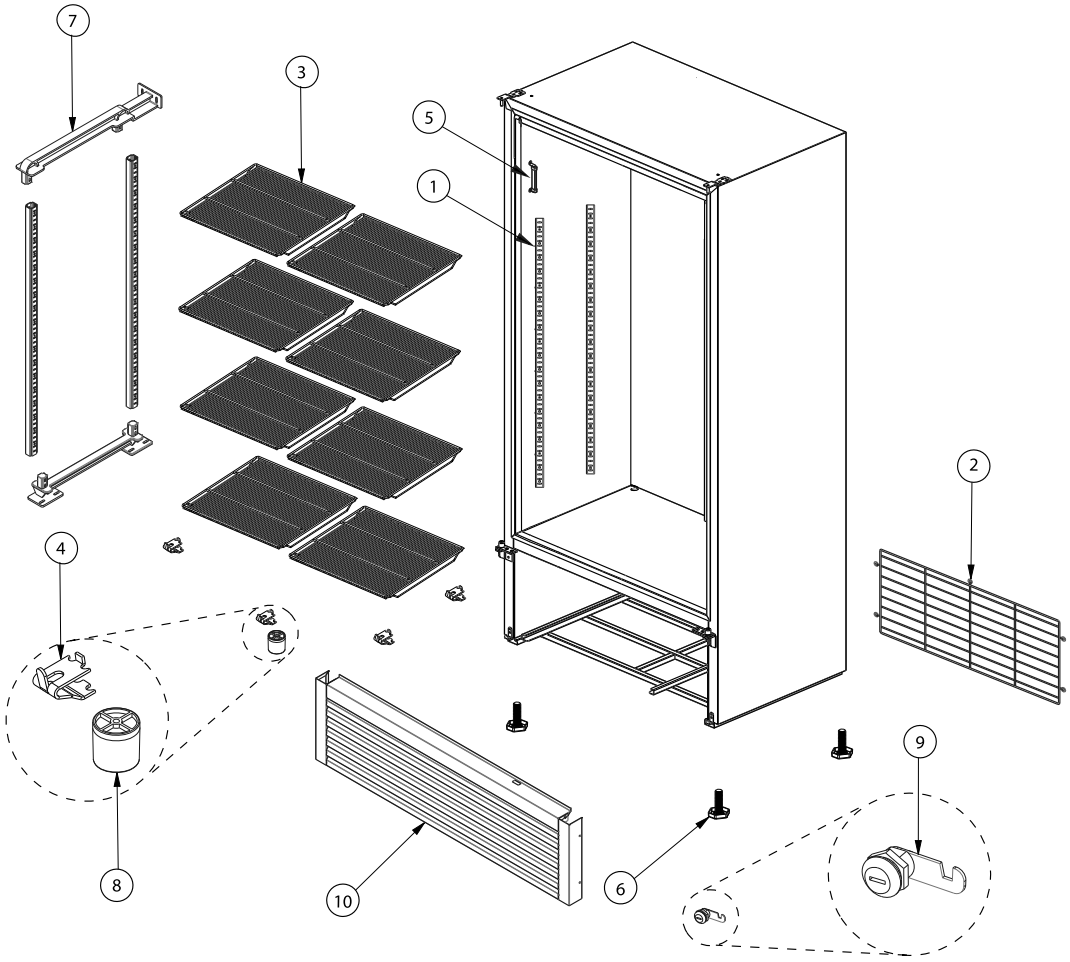

ITEM	SPARE PART CODE	DESCRIPTION
1	2061512	PILASTER
2	2026656	GRILL, WIRE REAR
3	2026667	SHELF
4	2045970	CLIP, F/PILASTER
5	2016589	THERMOMETER
6	2016557	LEVELING SCREW
7	2033626	MULT POLE
8	2020785	WALL SEPARATOR
9	2036141	MECHANICAL LOCKING
10A	2073966	BLACK METALLIC FRONT GRILL
10B	2073968	WHITE METALLIC FRONT GRILL

NOTES

Models with the same refrigeration system and operation condition are included in this manual

Drawings are an approximate representation of the reality

All accessories (shelves, clips, etc) are considerate from product base, extra items are not included

EVAPORATOR UNIT

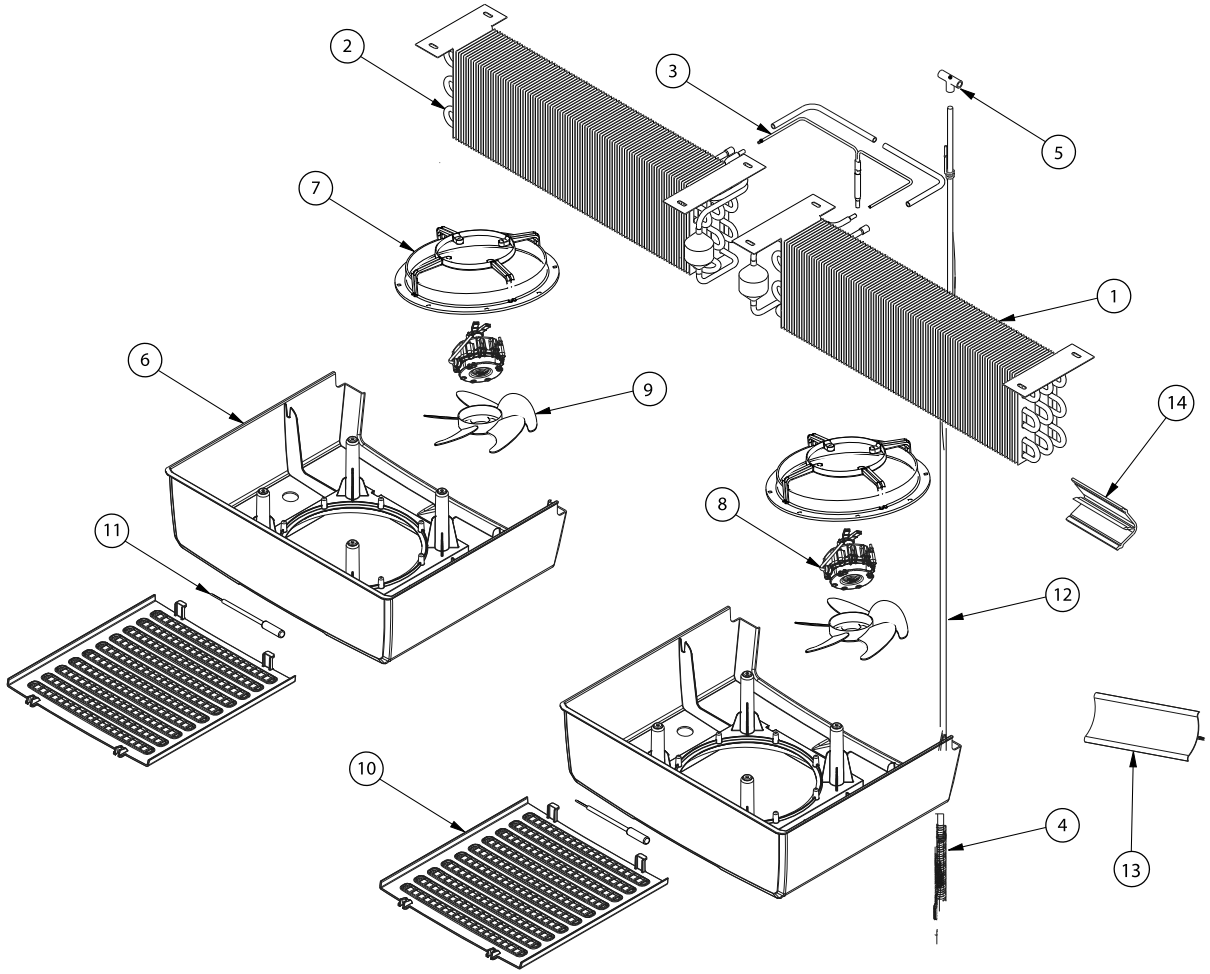

ITEM	SPARE PART CODE	DESCRIPTION
1	2068680	RIGHT EVAPORATOR
2	2068681	LEFT EVAPORATOR
3	2065334	DISTRIBUTION PIPE
4	2073991	CAP PIPE, 0.055"X144" N/OM
5	2056957	COPPER T 1/4"
6	2068682	EVAP HOUSING
7	2016756	MOTOR EVAP SUPPORT
8	2065335	EVAP FAN MOTOR, 16W 1800RPM
9		EVAP FAN BLADE, 8" Ø 28°
10	2068676	GRILL, ABS FAN BLADE UL
11	2056127	TEMPERATURE SENSOR
12	2072770	RETURN PIPE, 1/4" 1.810M W/CAP VRD43 R2
13	2072760	DEFLECTOR MOLDING
14	2034807	MOLD DEFLECTOR SUPPORT

CONDENSER UNIT

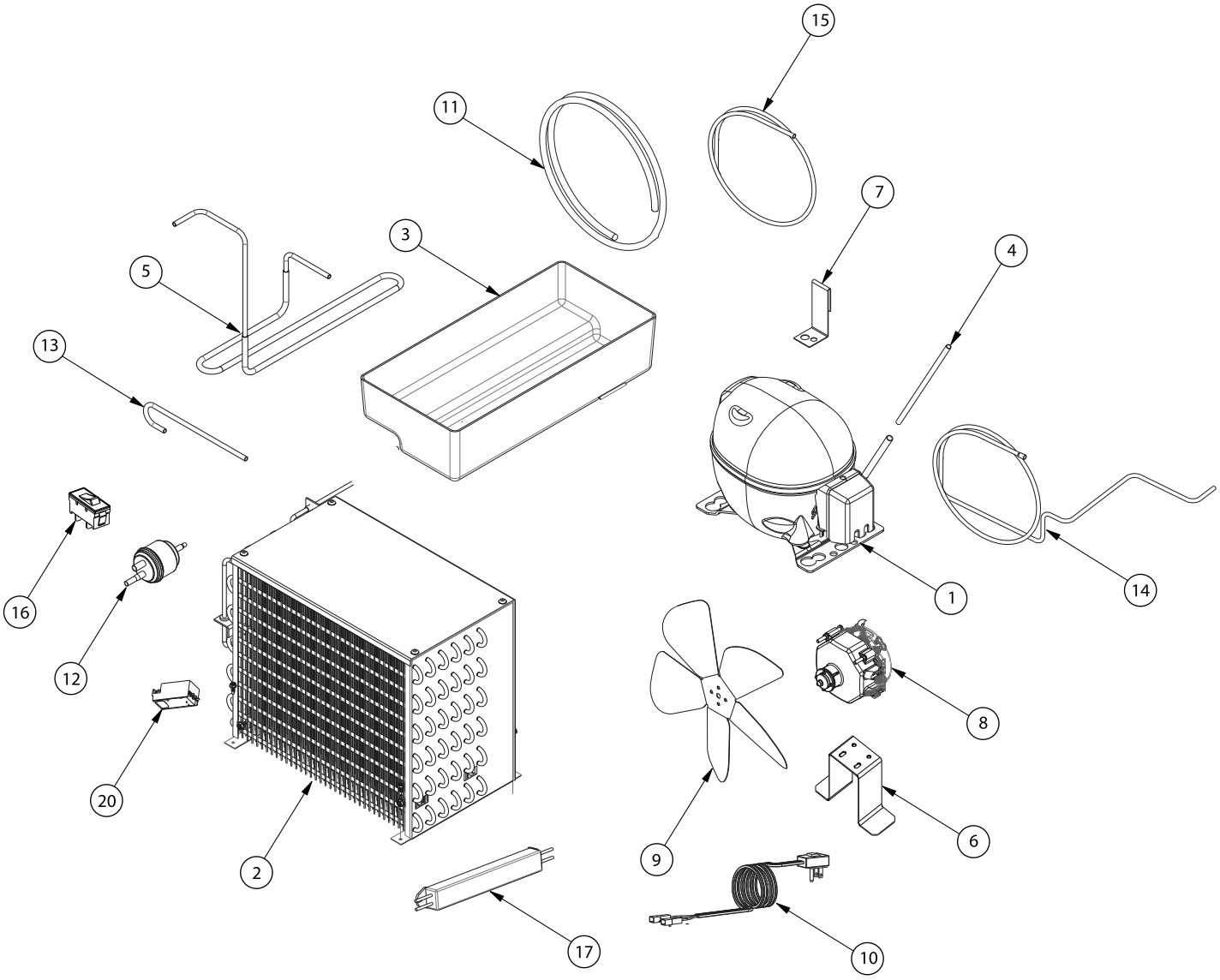

CONDENSER UNIT CONT'D

ITEM	SPARE PART CODE	DESCRIPTION
1	2068683	COMPRESSOR, NLE8.8CN
2	2056133	CONDENSER
3	2024707	COND PAN
4	2063514	CHARGE PIPE
5	2073253	DISCHARGE PIPE
6	2068684	MOTOR COND SUPPORT
7	2073254	COND PAN SUPPORT
8	2065335	COND FAN MOTOR, 16W 1800RPM
9	2061515	COND FAN BLADE, 8 3/4" Ø25°
10	2016559	POWER CORD
11	2036380	HOSE 18MM, 0.090M
12	2055229	FILTER
13	2063518	VACCUM PIPE
14	2073251	SUCTION PIPE
15	2061516	HOSE, 5/8" 0.45M
16	2016558	ROCKER SWITCH
17	2065129	LED DRIVER
18	2068369	CONTROL HARNESS
19	2074005	COMPRESSOR HARNESS
20	2065364	CONTROLLER
21	2073986	LIGHTING HARNESS

DOOR

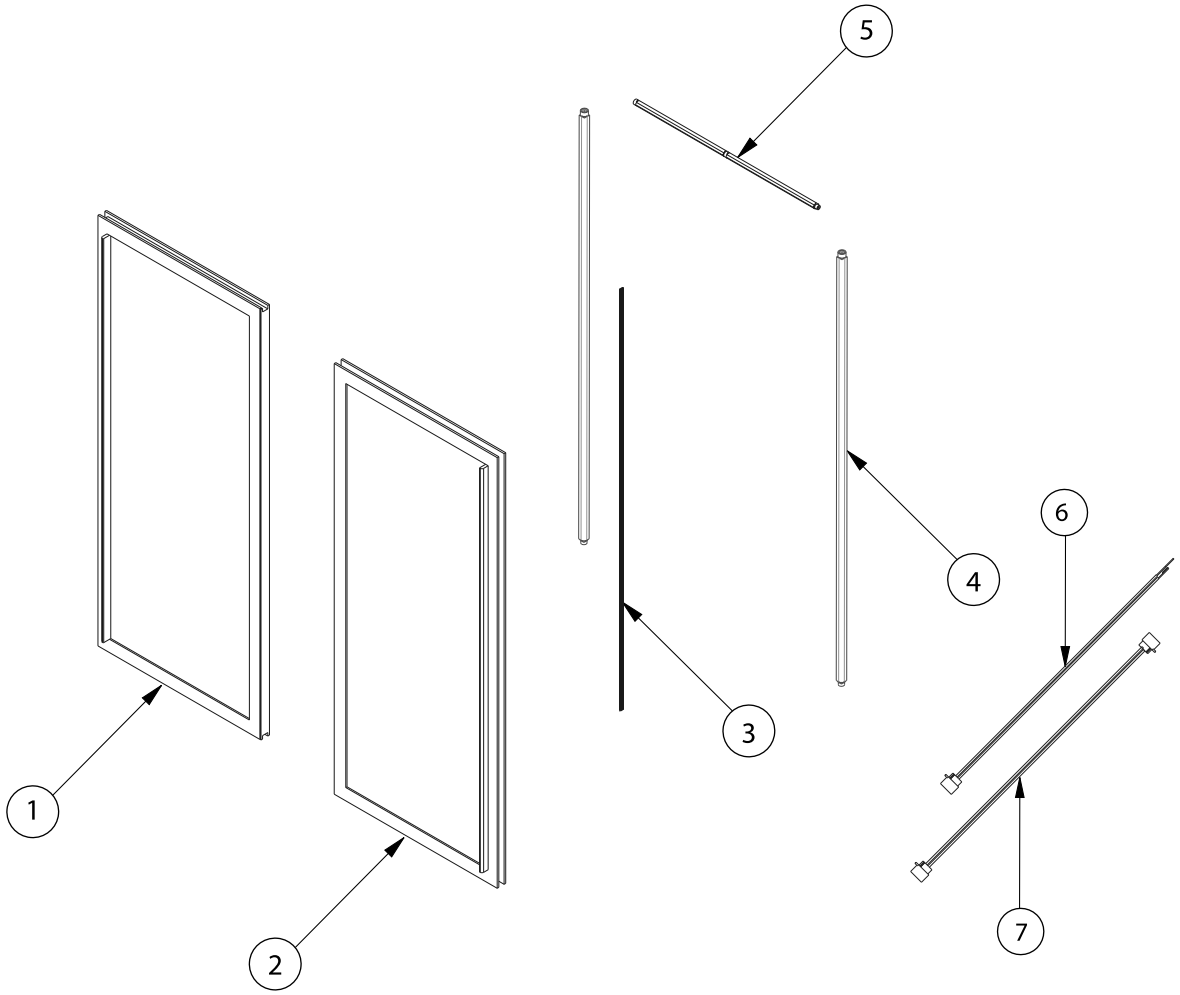

ITEM	SPARE PART CODE	DESCRIPTION
1	2065374	LEFT GLASS DOOR
2	2065370	RIGHT GLASS DOOR
3	2073982	MOULDING, GASKET
4	2073987	18 LED MODULE
5	2055502	6 LED MODULE
6	2040476	F-M LED MODULE HARNESS
7	2040477	ARNES H-DRIVER MODULED

REPLACEMENT PARTS FOR MT53 HINGED DOOR

GENERAL ASSEMBLY

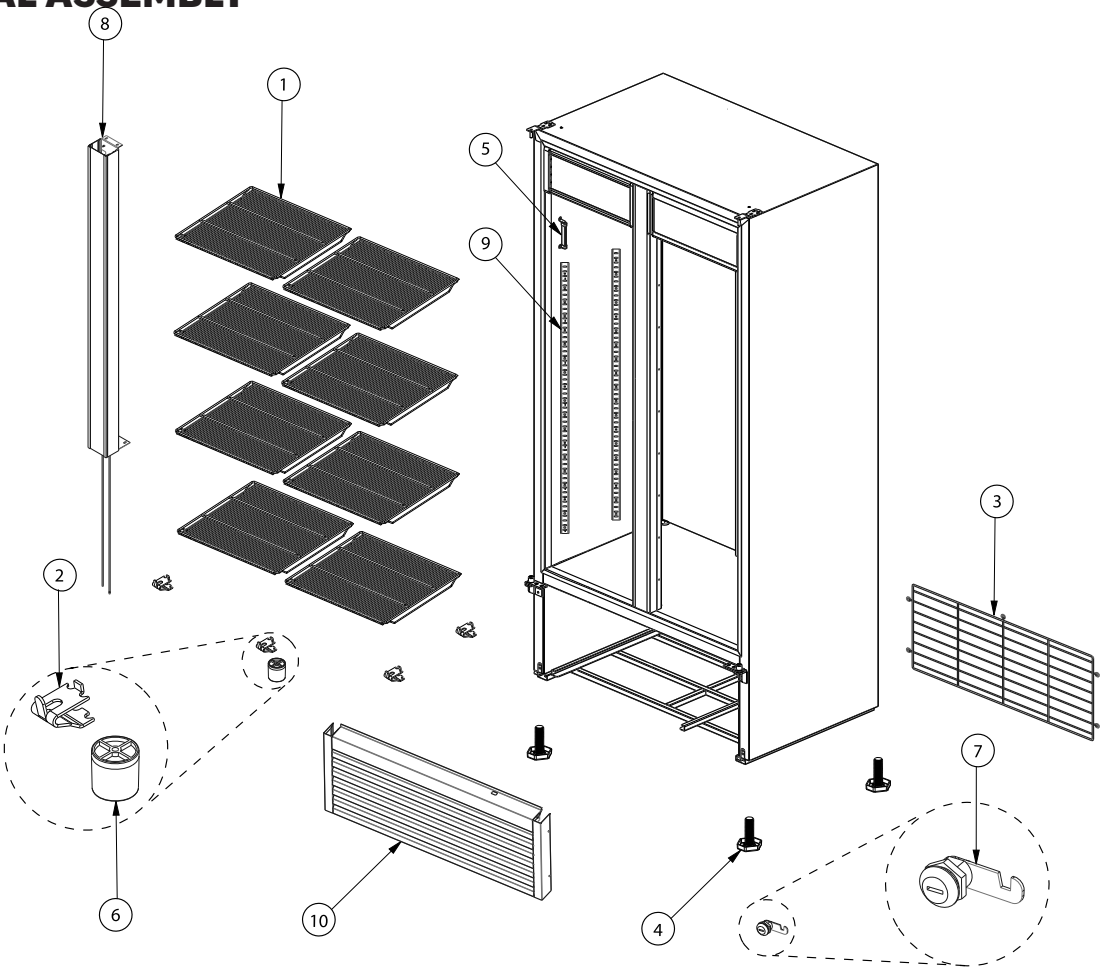

ITEM	SPARE PART CODE	DESCRIPTION
1	2024709	SHELF
2	2031014	CLIP, F/PILASTER
3	2045970	REAR GRILL WIRE
4	2068362	LEVELING SCREW
5	2068673	THERMOMETER
6	2033139	WALL SEPARATOR
7	2072772	MECHANICAL LOCKING
8		POLE FRONTAL
9	2049949	PILASTER
* 10A	2073965	WHITE METALLIC FRONT GRILL
* 10B	2073967	BLACK METALLIC FRONT GRILL

NOTES

Models with the same refrigeration system and operation condition are included in this manual

Drawings are an approximate representation of the reality

All accessories (shelves, clips, etc) are considerate from product base, extra items are not included

EVAPORATOR UNIT

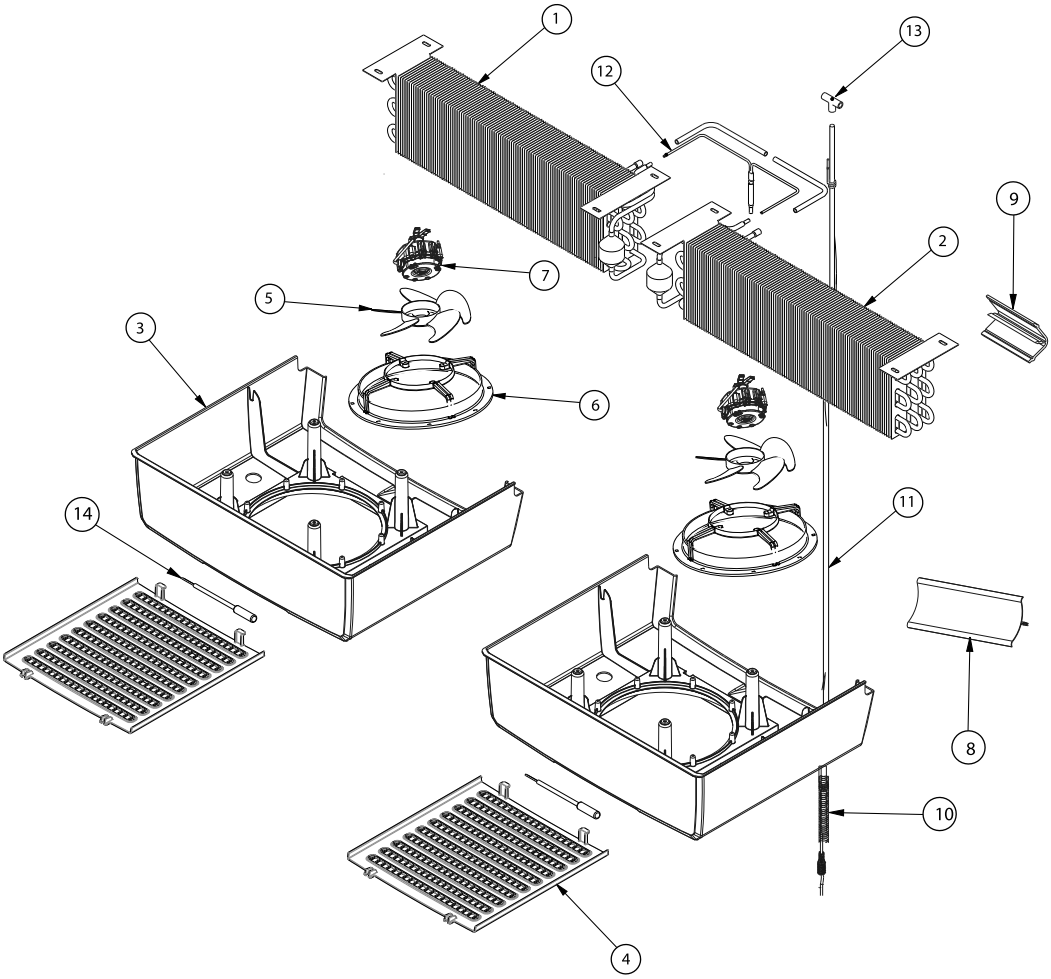

ITEM	SPARE PART CODE	DESCRIPTION
1	2068680	RIGHT EVAPORATOR
2	2068681	LEFT EVAPORATOR
3	2068682	EVAP HOUSING
4	2068676	GRILL, ABS FAN BLADE UL
5		EVAP FAN BLADE, 8" Ø 28°
6	2021792	MOTOR EVAP SUPPORT
7	2065335	EVAP FAN MOTOR, 16W 1800RPM
8	2072760	DEFLECTOR MOLDING
9	2034807	MOLD DEFLECTOR SUPPORT
10	2073991	CAP PIPE, 0.055"X144" N/OM
11	2072770	RETURN PIPE, 1/4" 1.810M W/CAP VRD43 R2
12	2073992	DISTRIBUTION PIPE
13	2065347	COPPER T 1/4"
14	2056127	TEMPERATURE SENSOR

CONDENSER UNIT

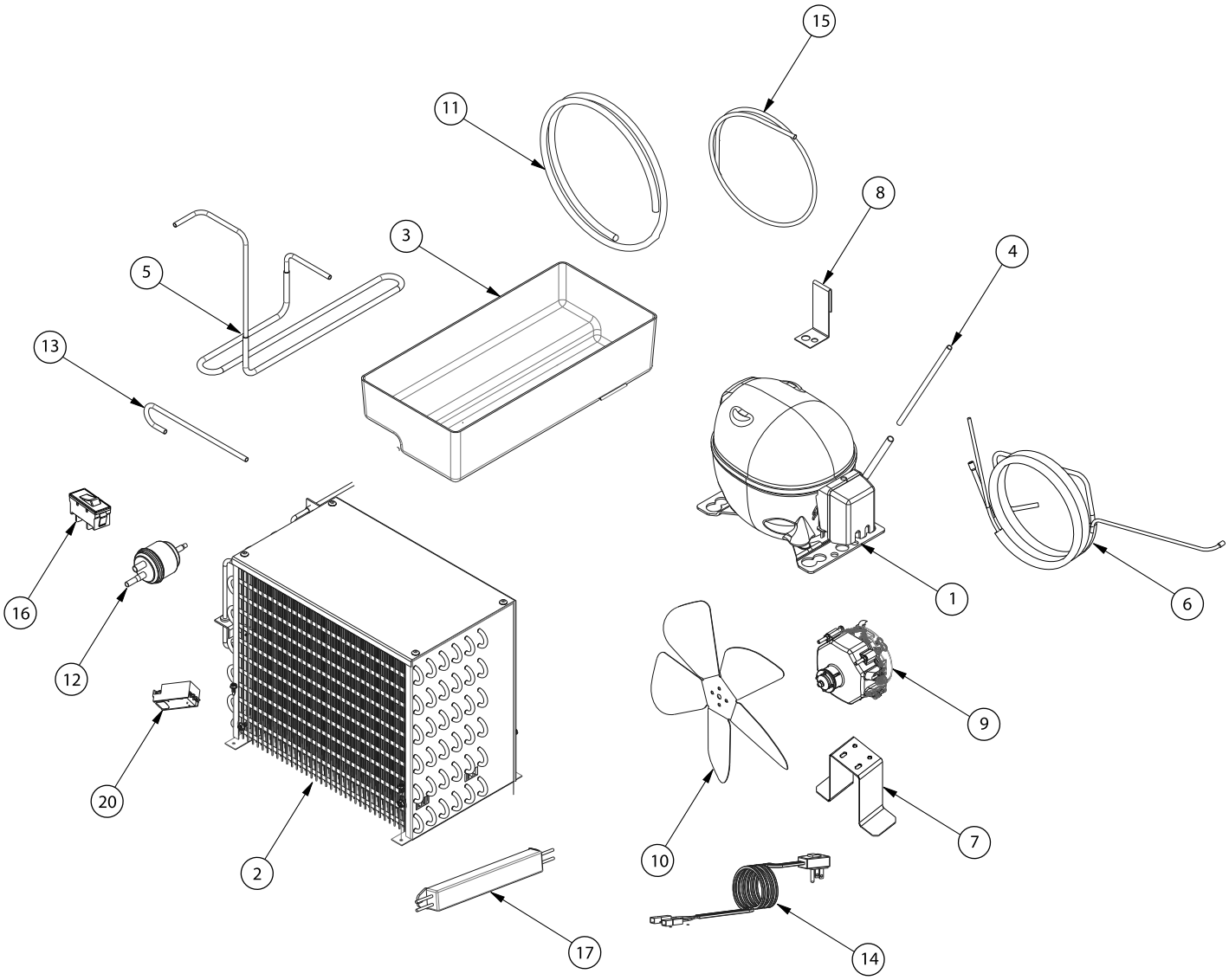

CONDENSER UNIT CONT'D

ITEM	SPARE PART CODE	DESCRIPTION
1	2068683	COMPRESSOR, EMC3140U
2	2056133	CONDENSER
3	2024707	COND PAN
4	2063514	CHARGE PIPE
5	2073249	DISCHARGE PIPE
6	2073247	HEAT EXCHANGER
7	2068684	MOTOR COND SUPPORT
8	2073254	COND PAN SUPPORT
9	2065335	COND FAN MOTOR, 16W 1800RPM
10	2061515	COND FAN BLADE, 8 3/4" Ø25°
11	2061516	HOSE, 5/8" 1.20M
12	2055229	FILTER
13	2072429	VACCUM PIPE
14	2065163	POWER CORD
15	2065320	HOSE 18MM, 0.090M
16	2016558	ROCKER SWITCH
17	2048141	LED DRIVER
18	2068369	CONTROL HARNESS
19	2065098	COMPRESSOR HARNESS
20	2065364	CONTROLLER
21	2073983	LIGHTING HARNESS

DOOR

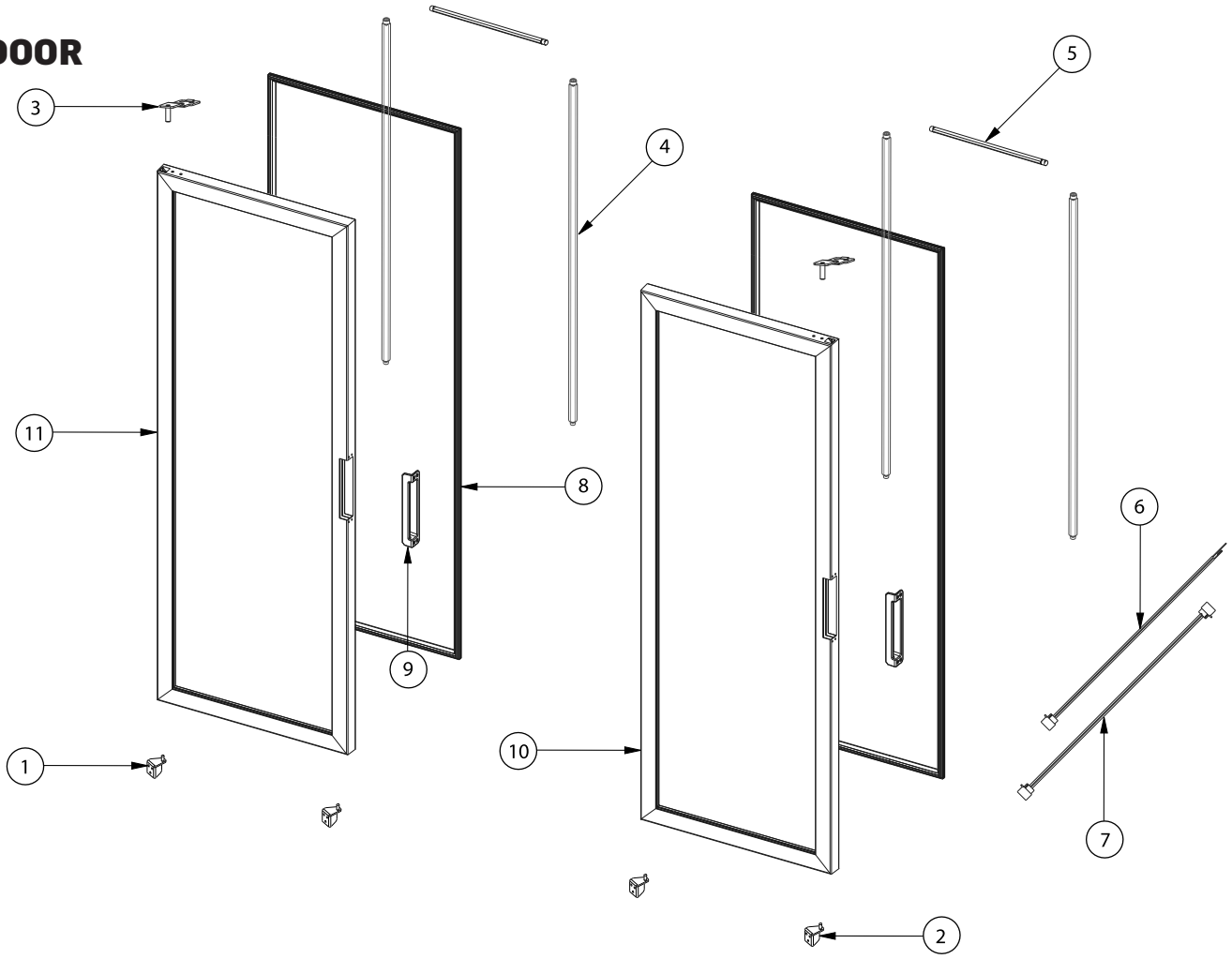

ITEM	SPARE PART CODE	DESCRIPTION
1	2068373	BOTTOM HINGE METALLIC
2	2068372	BOTTOM HINGE METALLIC
3	2016574	TOP HINGE METALLIC
4	2073987	18 LED MODULE
5	2055502	6 LED MODULE
6	2040476	F-M LED MODULE HARNESS
7	2040477	ARNES H-DRIVER MODULED
8	2046559	DOOR GASKET
* 9A	2074004	BLACK PLASTIC DOOR HANDLE
* 9B	2073990	WHITE PLASTIC DOOR HANDLE
* 10A		BLACK LEFT GLASS DOOR
* 10B		WHITE LEFT GLASS DOOR
* 11A		BLACK RIGHT GLASS DOOR
* 11B		WHITE RIGHT GLASS DOOR

REPLACEMENT PARTS FOR MT53 SLIDING DOOR

GENERAL ASSEMBLY

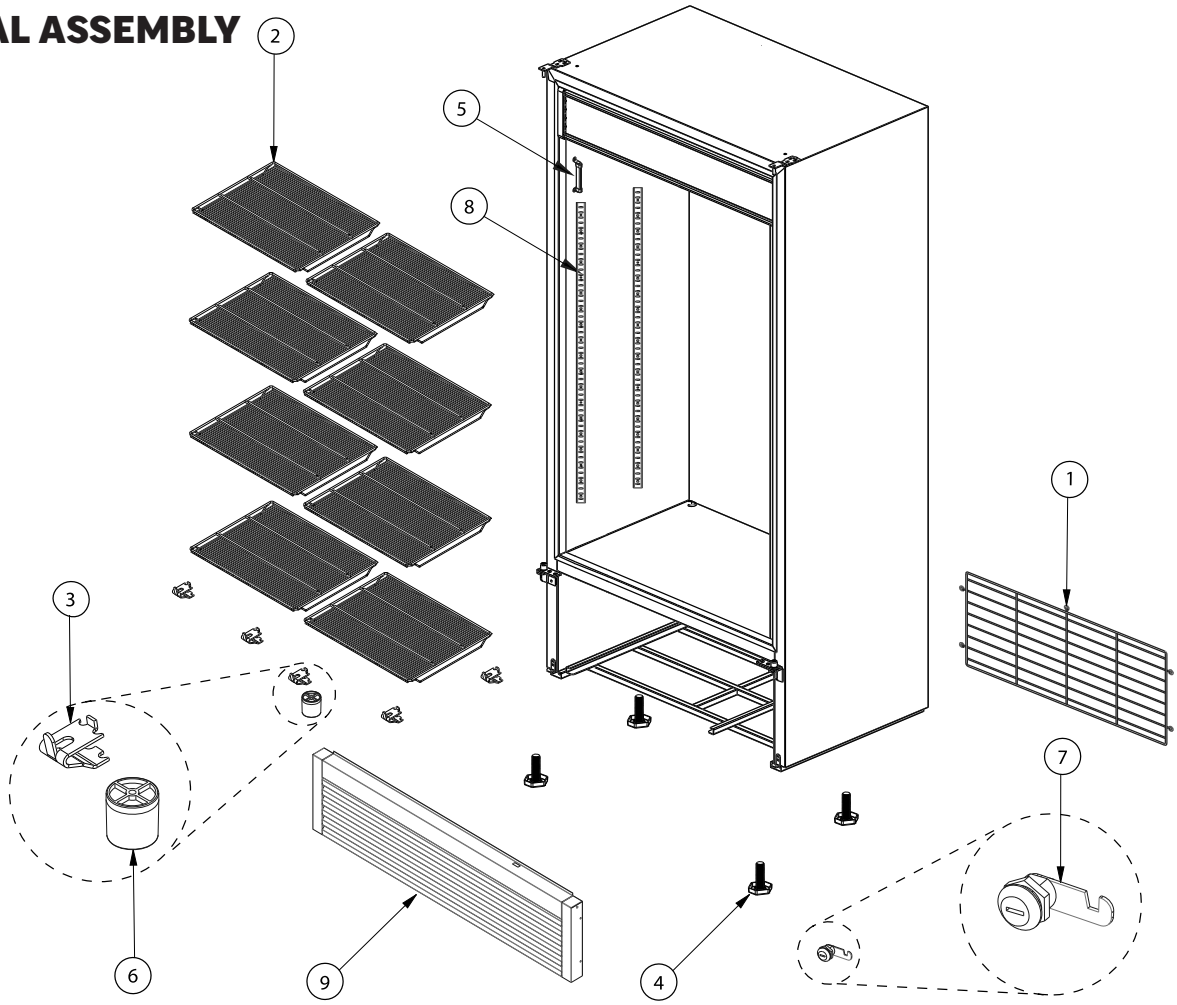

1	2047063	REAR GRILL WIRE
2	2031014	SHELF
3	2045970	CLIP, F/PILASTER
4	2016557	LEVELING SCREW
5	2065185	THERMOMETER
6	2020785	WALL SEPARATOR
7	2036141	MECHANICAL LOCKING KIT
8	2049949	PILASTER
* 9A		WHITE METALLIC FRONT GRILL
* 9B		BLACK METALLIC FRONT GRILL

NOTES

Models with the same refrigeration system and operation condition are included in this manual

Drawings are an approximate representation of the reality

All accessories (shelves, clips, etc) are considerate from product base, extra items are not included

EVAPORATOR UNIT

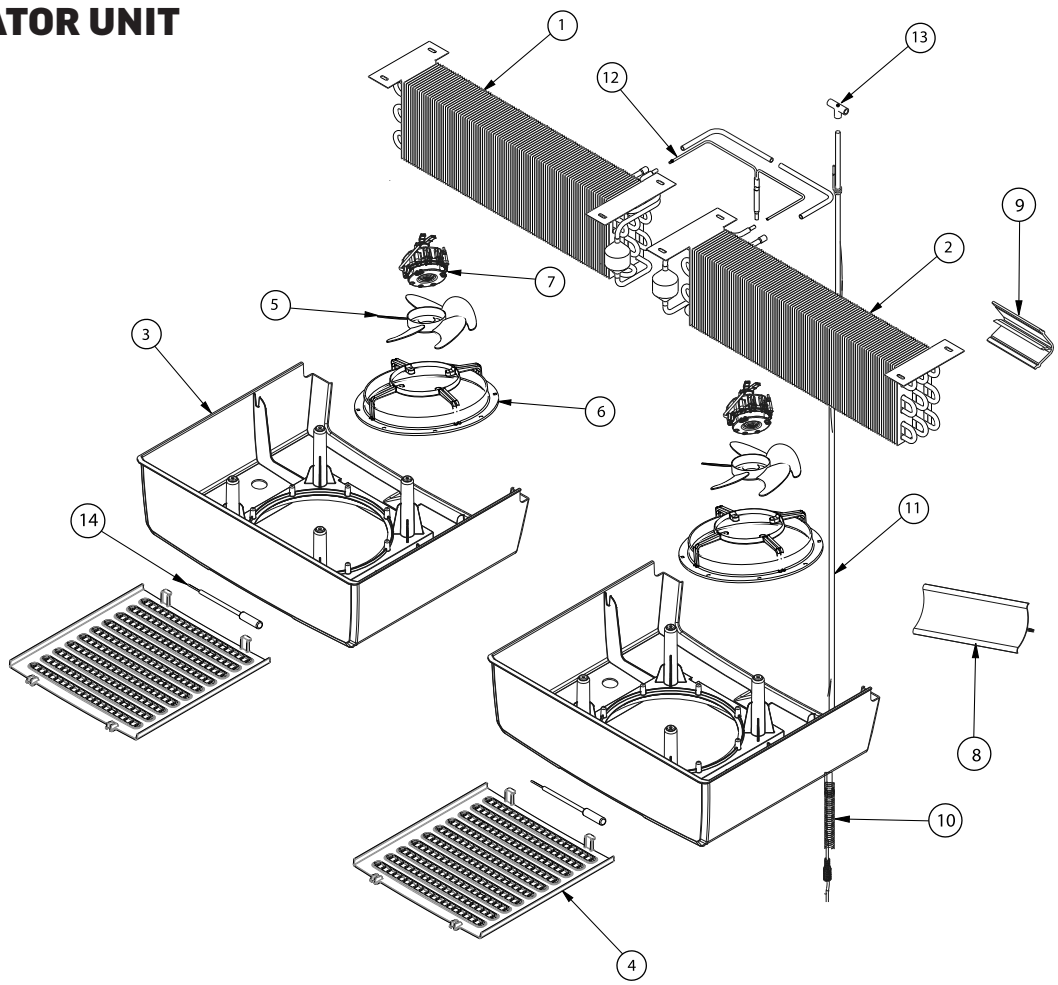

ITEM	SPARE PART CODE	DESCRIPTION
1	2068680	RIGHT EVAPORATOR
2	2068681	LEFT EVAPORATOR
3	2068682	EVAP HOUSING
4	2068676	GRILL, ABS FAN BLADE UL
5		EVAP FAN BLADE, 8" Ø 28°
6	2021792	MOTOR EVAP SUPPORT
7	2065335	EVAP FAN MOTOR, 16W 1800RPM
8		DEFLECTOR MOLDING
9	2034807	MOLD DEFLECTOR SUPPORT
10		CAP PIPE, 0.055"X144" N/OM
11		RETURN PIPE, 1/4" 1.810M W/CAP VRD43 R2
12		DISTRIBUTION PIPE
13	2065347	COPPER T 1/4"
14	2056127	TEMPERATURE SENSOR

CONDENSER UNIT

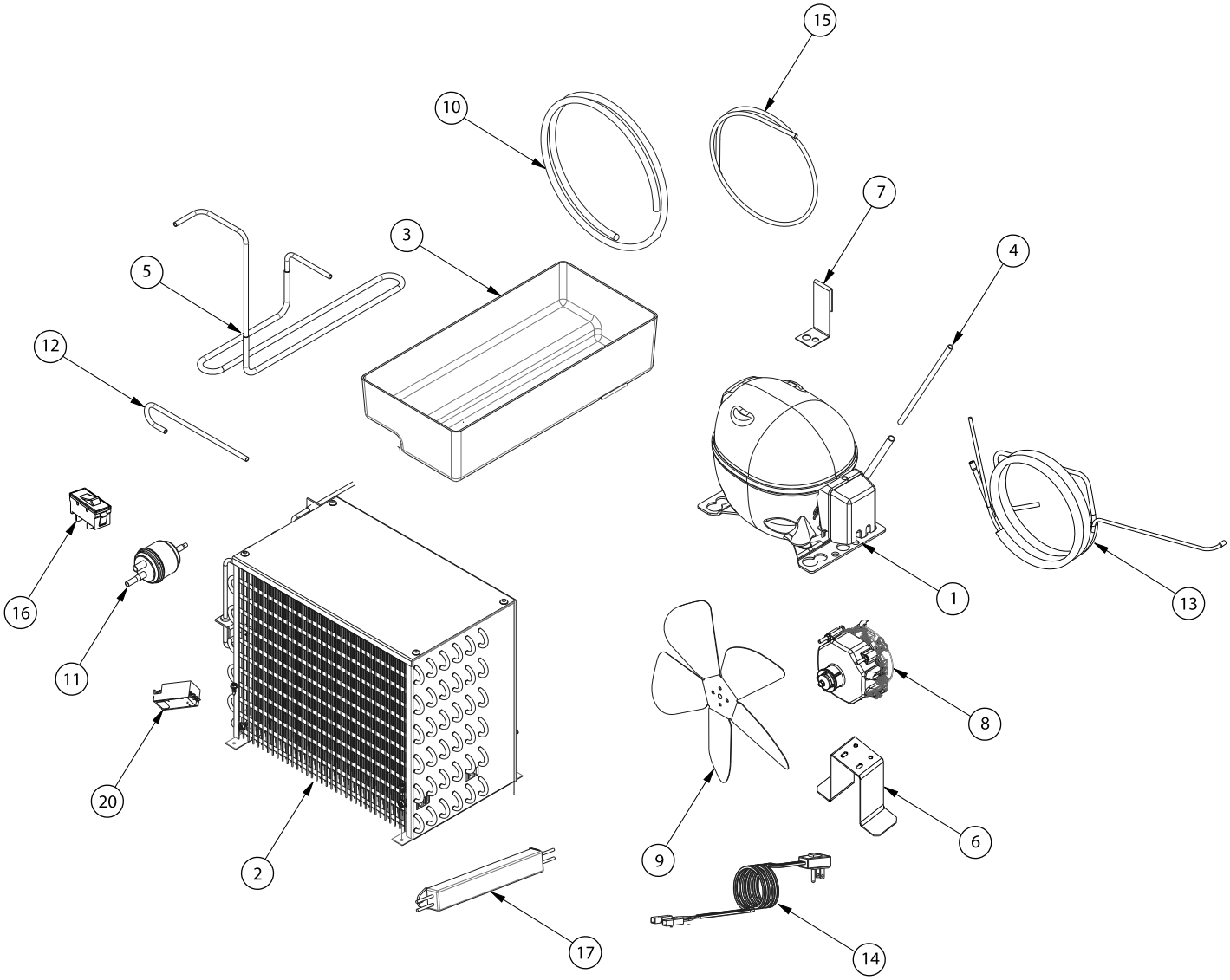

CONDENSER UNIT CONT'D

ITEM	SPARE PART CODE	DESCRIPTION
1	2068683	COMPRESSOR, EMC3140U
2	2056133	CONDENSER
3	2024707	COND PAN
4	2063514	CHARGE PIPE
5		DISCHARGE PIPE
6	2068684	MOTOR COND SUPPORT
7		COND PAN SUPPORT
8	2065335	COND FAN MOTOR, 16W 1800RPM
9	2061515	COND FAN BLADE, 8 3/4" Ø25°
10	2061516	HOSE, 5/8" 1.20M
11	2055229	FILTER
12	2063518	VACCUM PIPE
13		SUCTION PIPE
14	2065163	POWER CORD
15	2065320	HOSE 18MM, 0.090M
16	2016558	ROCKER SWITCH
17	2048141	LED DRIVER
18	2068369	CONTROL HARNESS
19		COMPRESSOR HARNESS
20	2065364	CONTROLLER
21		LIGHTING HARNESS

DOOR

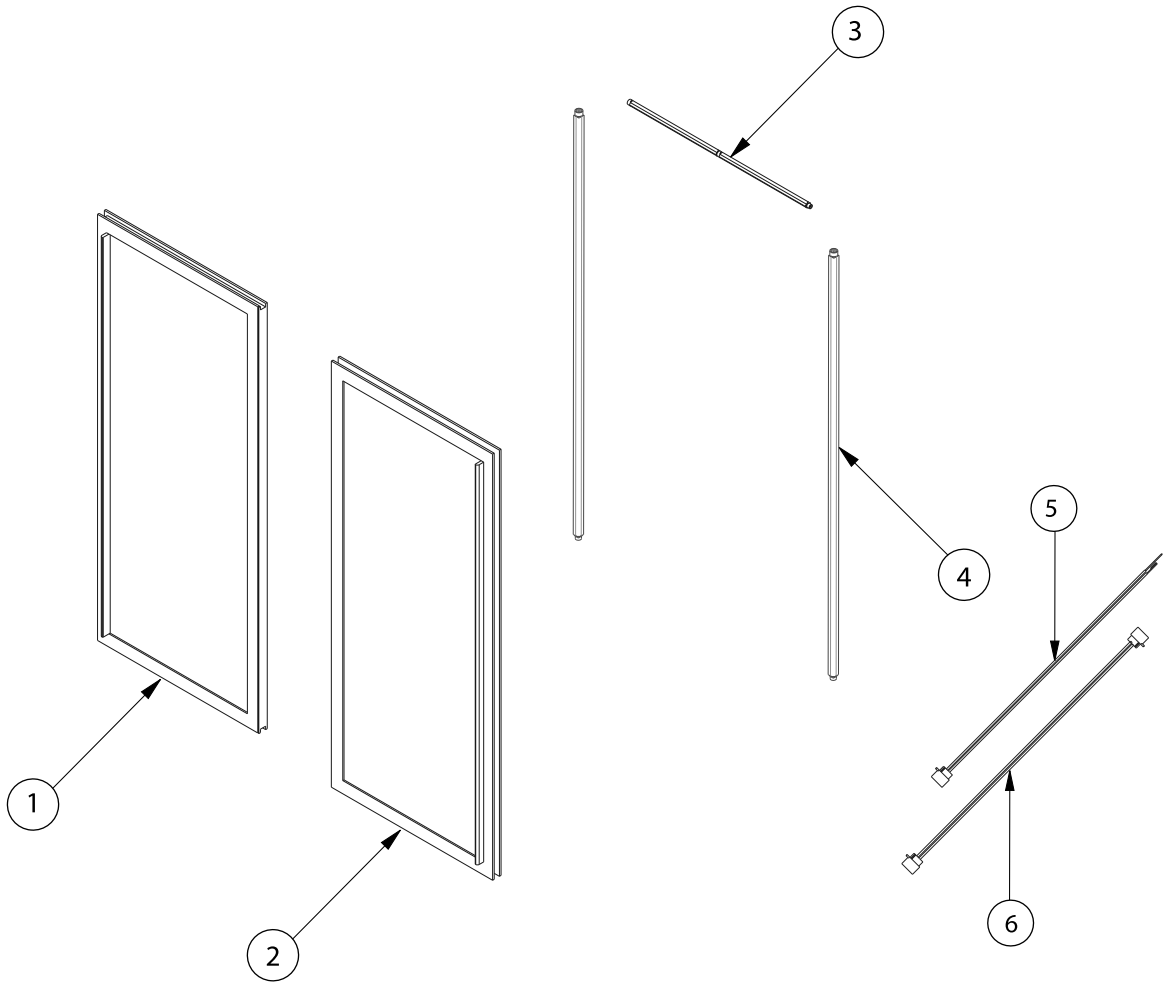

ITEM	SPARE PART CODE	DESCRIPTION
1	3053432	LEFT GLASS DOOR
2	3053433	RIGHT GLASS DOOR
3	2055502	6 LED MODULE
4		18 LED MODULE
5	2040476	F-M LED MODULE HARNESS
6	2040477	ARNES H-DRIVER MODULED

Warranty Registration

Register your product online at **beverage-air.com/parts-service** or fill out and mail the form below.

Cabinet Model Number: _____ Date Of Installation: _____

Cabinet Serial Number: _____

Location Of Product

Business Name: _____

Business Street: _____

Business City: _____ State: _____ Postal Code:_____

Mail to: Beverage-Air, 3779 Champion Blvd, Winston-Salem, NC 27105

Rev. 02/26