BEVERAGE-AIR®

INSTALLATION AND OPERATING INSTRUCTIONS
for all Hydrocarbon
MMR Refrigerator Models

809-150A Rev. F 03/10/2026
3779 CHAMPION BLVD, WINSTON-SALEM, NC 27105
Phone: (888) 845-9800 | Fax: (800) 253-5168 | Web: beverage-air.com

SEE BACK COVER FOR WARRANTY REGISTRATION

Ali GROUP

WELBILT® an Ali Group Company

WELCOME

Thank you for purchasing a Beverage-Air cabinet. This series has passed our strict quality control inspection and meets the high standards set by Beverage-Air! You have made a quality investment that with proper maintenance will give you many years of reliable service!

Please read the following installation and maintenance instructions before installing or using your unit.

Important Information

- PLEASE READ THESE INSTRUCTIONS CAREFULLY BEFORE INSTALLING OR USING, IF RECOMMENDED PROCEDURES ARE NOT FOLLOWED, WARRANTY CLAIMS MAY BE DENIED.
- Your warranty registration information is located with this manual. Please complete the card and submit it to Beverage-Air within TEN days of installation. Failure to properly register equipment may limit or void the warranty.
- Beverage-Air reserves the right to change specifications and product design without notice. Such revisions do not entitle the buyer to corresponding changes, improvements, additions, or replacements for previously purchased equipment.

Safety 3
Important Information 5
Product Information 6
Clearance and Placement 7
Unpacking and Set Up 8
Shelf Installation 9
Sliding Glass Doors 10
Electrical 11
Using The Unit - Danfoss Controller 12
Sequence of Operations Refrigerator 13
Using The Unit - Eliwell Controller 17
Sequence of Operations Refrigerator 18
Cleaning and Maintenance 21
Condenser Cleaning 22
Methods For Cleaning Stainless Steel 23
Help 24
For The Service Tech - R290 25
For The Service Tech - Wiring Diagrams 26
Units with Electronic Smart Locks 28
Limited Warranty 29
Limited Warranty (continued) 30

SAFETY

This appliance has been designed with your safety in mind. It has many features to keep you from being harmed. However, safe operation and maintenance are your responsibilities.

CAUTION

Use: When using this unit, please:

- **Move it carefully.** If on casters be sure the casters do NOT run over the power cord.
- **Lock** the casters when in use.
- **Seek help.** This machine is heavy! Be sure to move with enough help to avoid tipping or dropping the cabinet.
- **Prevent children from playing in or on the cabinet**. Persons unable to use this product must be prevented access.
- **Follow all instructions**. There are many safety labels and directions on the unit. Heed them.
- **Watch your fingers**. There may be pinch points near the door hinges.

CAUTION

Maintenance

Do NOT:

- Clean a frozen evaporator with a sharp object
- Clean a dirty condenser with a sharp object.
- Store gasoline, kerosene or any other flammable material near the cabinet.

Do ALWAYS

- Use a Beverage-Air recommended technician certified to repair R290 equipment.
- Use ONLY Beverage-Air factory service parts. Use of non OEM parts can be dangerous because of the design changes needed to safely use R290.

Important Information to Add

Record the model number, serial number and the date of installation here for future reference. The model and serial numbers are on the unit's serial number dataplate, which is located on the left inside wall.

Model Number	
Serial Number	
Date of Installation	
Purchased From	

CAUTION **WARNING**

Observe the **Caution** and **Warning** notices. They are indicators of important safety information. Keep this manual for future reference.

CAUTION

CAUTION: If it is necessary to move the Refrigerator after removal from the skid, remove all doors and carefully push the unit at a point of no more than 36" from the bottom to avoid damage.

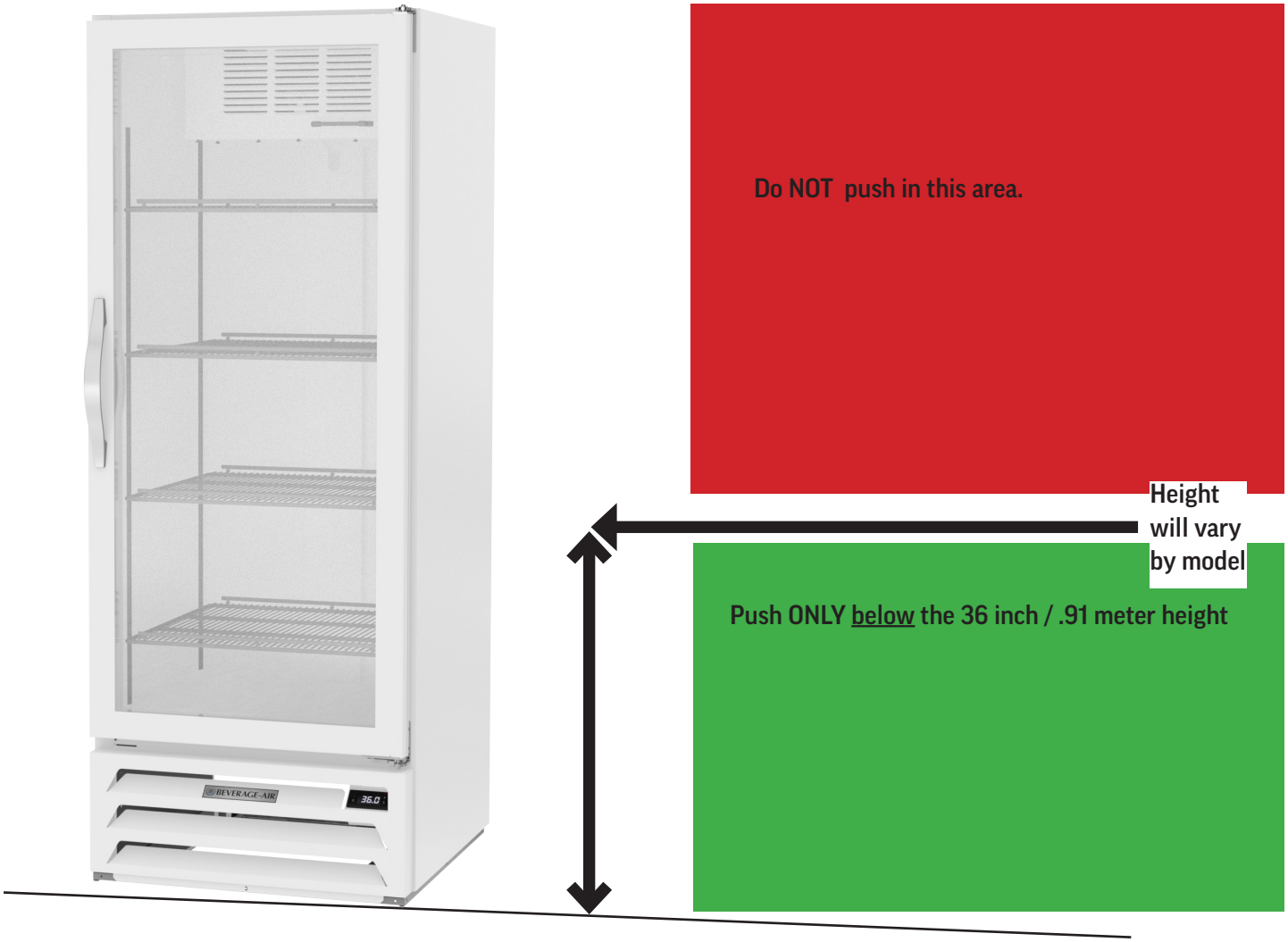

IMPORTANT INFORMATION

This unit is intended to be used in a commercial application. That includes bars and restaurants.

If installed in a residence some commercial service companies may not be able to service it on site.

The manufacturer has designed and produced this machine with the finest in materials. The manufacturer assumes no liability for units that have been altered in any way. Alterations or part substitutions will void the warranty.

Limitations

The machine is designed for use indoors in a controlled environment. It must be kept dry, not overheated or subjected to excessive cold. May only be connected to a dedicated electrical circuit. Extension cords are not permitted.

	Minimum	Maximum
Voltage	103.5	126.5
Room Air Temp	60° F	100° F

Air Flow, All Models regardles of section, door count or door material.

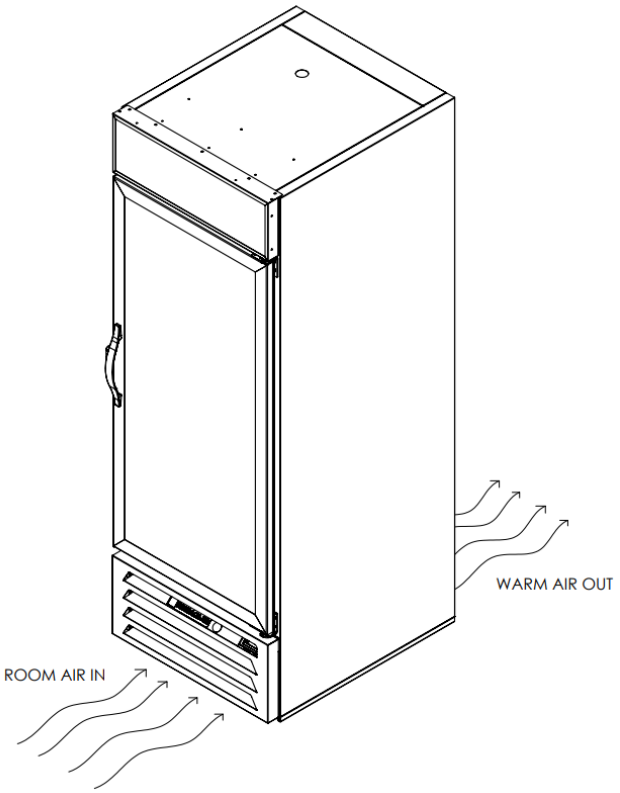

Agency Approvals

These marks appear on the dataplate or serial tag, located in the inside of the left wall. The dataplate also contains the model and serial numbers as well as electrical requirements.

PRODUCT INFORMATION

Model	Cabinet Dimensions w x d x h (Inches)	Full Glass Door	Full Load Amps	Power Cord Plug (NEMA)	Refrigerant Type / Charge (g) / Charge (oz)
MMR12HC-1	24 1/8 X 25 3/4 X 62	1 Hinged	1.7	5-15P	R-290 / 75 / 2.65
MMR19HC-1	27 1/4 x 27 1/2 x 78 1/8		2.88		R-290 / 90 / 3.18
MMR23HC-1	27 1/4 x 33 1/2 x 78 1/8				
MMR27HC-1	30 x 33 1/2 x 78 1/8				
MMR35HC-1	39 1/2 x 33 1/2 x 78 1/8	2 Hinged	3.9		R-290 / 110 / 3.88
MMR38HC-1	43 1/2 x 32 1/4 x 78	1 Sliding	5.4		R-290 / 115 / 4.06
MMR44HC-1	47 x 33 1/2 x 78	2 Hinged	3.9		R-290 / 110 / 3.88
MMR45HC-1	52 x 32 1/4 x 78	2 Sliding			
MMR49HC-1	52 x 33 1/2 x 78	2 Hinged			
MMR66HC-1	75 x 32 1/8 x 78	3 Sliding	6.2		R-290 / 150 / 5.29
MMR72HC-1	75 x 33 1/2 x 78 1/8	3 Hinged	6.12		R-290 / 100 / 3.53
UNITS WITH ELECTRONIC SMART LOCK					
MMR12HC-IQ	25 1/8 X 25 3/4 X 62 1/8	1 Hinged	1.7	5-15P	R-290 / 75 / 2.65
MMR23HC-IQ	28 3/8 x 33 1/2 x 78		2.88		R-290 / 90 / 3.18
MMR27HC-IQ	31 1/8 x 33 5/8 x 78				
MMR44HC-IQ	47 x 33 1/2 x 78	2 Hinged	3.9		R-290 / 110 / 3.88
MMR49HC-IQ	52 x 33 1/2 x 78				
WINE UNITS					
MMR23HC-1-B-WINE	27 1/4 x 33 1/2 x 78 1/8	1 Hinged	2.88	5-15P	R-290 / 90 / 3.18
MMR27HC-1-B-WINE	30 X 33 1/2 X 78 1/8				
MMR44HC-1-B-WINE	47 X 33 1/2 X 78	2 Hinged	3.9		R-290 / 110 / 3.88
MMR49HC-1-B-WINE	52 X 33 1/2 X 78				
MMR72HC-1-B-WINE	75 X 33 1/2 X 78 1/8	3 Hinged	6.12		R-290 / 100 / 3.53
PASS THRU MODEL					
MMR49HC-1-B-PT	52 X 36 1/2 X 78	4 Hinged	3.9	5-15P	R-290 / 110 / 3.88

Height includes casters.

- Black, white or stainless models available in most cabinet sizes. Some have lock features available.
- Low E glass available on some models
- Standard refrigerator models will maintain product temperature between 35.5 and 40.5 degrees F. at the factory setting of 38.^{0}F.
- Wine models will maintain product temperature between 35 and 62 degrees F. at the factory setting of 38.^{0}F.
- All models are 115 volts, 60 Hz AC.
- ALWAYS REFERENCE YOUR EQUIPMENT DATA PLATE AMPS, REFRIGERANT AND REFRIGERANT CHARGE FOR THE MOST UP TO DATE AND ACCURATE VALUES.
- There are no access valves on the refrigeration system.

CLEARANCE AND PLACEMENT

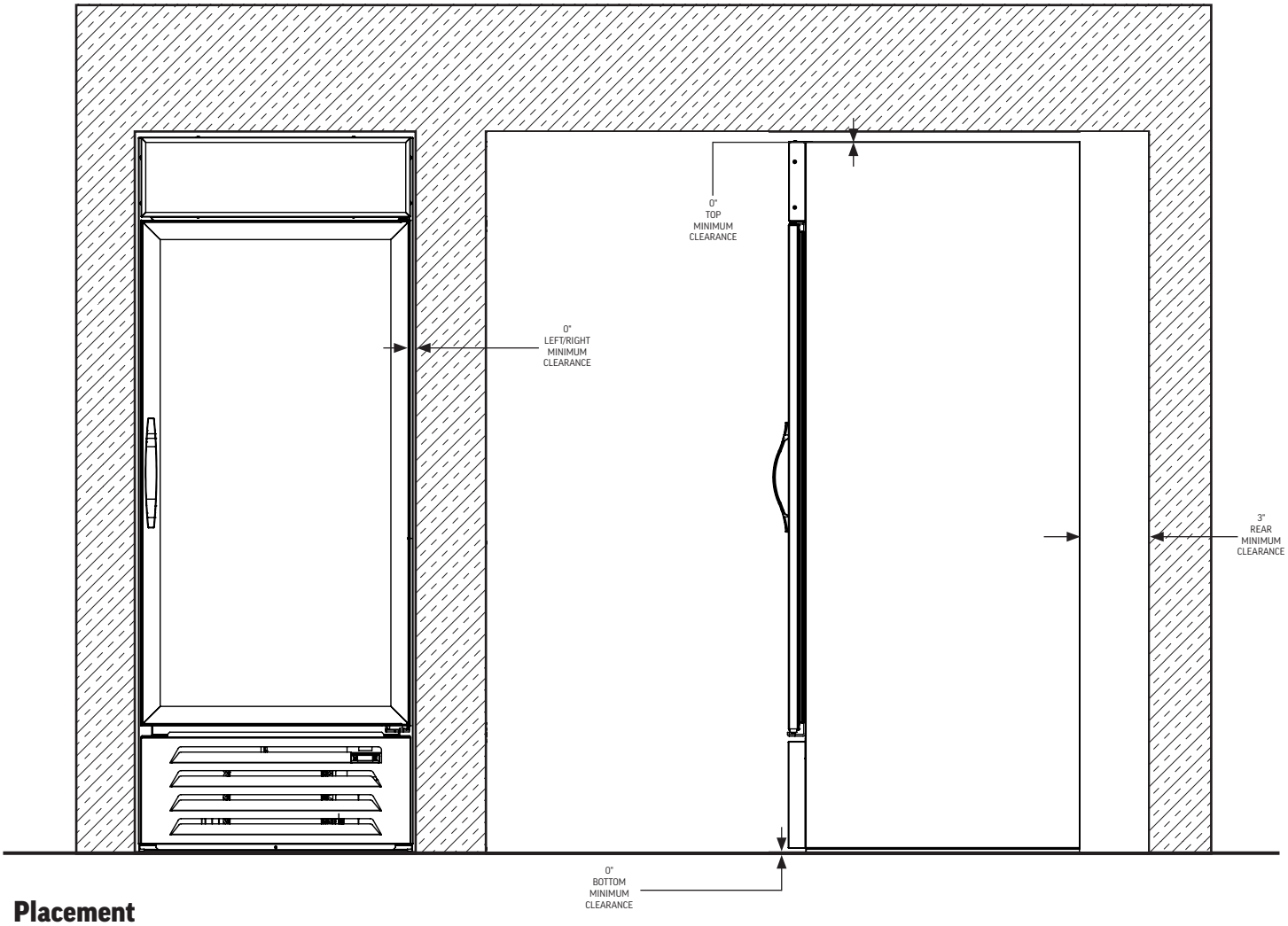

Placement

Consider the following when selecting a location for your Refrigerator:

Clearance:

- 0.0 in. at the top
- 3.0 in. at the rear (except pass thru model)
- 0.0 in. at the left side
- 0.0 in. at the right side
- 0.0 in at the bottom

Floor Load: the floor on which the Refrigerator is located must be even and level, free from vibrations, and strong enough to support the combined weights of the unit and maximum product load.

Ventilation: Grille area at front must be free and clear of any object or wall.

Power Outlet: Dedicated power outlet is located within the length of the unit's power cord.

UNPACKING AND SET UP

Carefully inspect the shipping carton for damage. This is the only time that shipping damage may be claimed. If damage is suspected, open the carton immediately and, if there is damage, retain the carton and contact the shipper to make a claim. Do NOT contact the manufacturer.

Uncrating

Tools Needed: ¾" box wrench, adjustable wrench, level, flat head screw driver, and box cutter.

1. Cut the stretch wrap along a corner post and remove the cardboard top capping and the corner posts.
2. Discard stretch wrap and any cardboard that will not be recycled.

   Note: additional clear plastic protective wrap is applied directly to any product with a glass door.

3. Move unit as close to final position as possible before removing the skid.

   Note: The skid must be removed before the casters or legs can be attached.

Do NOT tip unit on its front or sides. If tipped onto the back, unit must not be started for 3 hours.

Skid Removal and Caster Attachment

Tip the unit forward and remove the skid.

WARNING

Risk of personal injury.
Unit must be securely supported while attaching casters or legs.

1. Remove the shipping bolts using the ¾" box wrench while cabinet is held in one direction. Repeat the process while the cabinet is held in the opposite direction.
2. None of the threads on the leg or caster stem should be visible once screwed in.
3. Tilt the cabinet in one direction approximately 8" and block it securely with pieces of 2x4 lumber or other suitable material.
4. Thread the stem casters or legs into the ½ -13 holes in the bottom of the cabinet. Tighten by hand as much as possible.
5. Once the caster or leg cannot be turned any further, use a 3/4 inch wrench to tighten the nut in between the mounting plate and the wheel of the caster until snug.
6. Repeat this procedure with unit secured in the opposite direction so as to access the remaining legs/ casters
7. If plate casters or legs are installed instead of stem casters or legs, then repeat step 3 above and secure the plate with either #14 AB screws, or ¼-20 screws, depending upon which are required.

Leveling:

Cabinets must be leveled when installed. Level should be measured on the headrail.

Note: If no casters, legs or levelers are to be installed, the floor below the equipment must be level

Failure to level your cabinet may result in door not sealing, closing correctly, or condensed water draining not draining properly.

For cabinets with legs, rotate the foot of the leg with an adjustable wrench to achieve desired height for leveling.

For cabinets with casters, leveling can be achieved by placing large washers in between the ½' stud and the holes located on the bottom of the case.

Do NOT loosen casters to level the cabinet. Casters MUST be tightly secured to cabinet for full strength.

CAUTION

Install or attach any accessories that will be used
Remove any plastic covering the stainless steel.

SHELF INSTALLATION

1. Determine the proper location for the shelf clips. The reference numbers on the pilaster can serve as a guide to ensure all clips are properly located.
2. Insert the top tab of the shelf clip into the desired hole of the pilaster. The retaining tab MUST be facing up as shown.
3. Rotate the clip downwards and insert the bottom tab into the matching hole in the pilaster. The clip may need to be squeezed slightly during installation.
4. Install all remaining clips.
5. Install shelves onto clips with the product retention bar facing up. Be careful not to dislodge clips during installation.
6. Place shelves so that the retaining tab on the clip captures the shelf as shown.
7. Confirm that the shelf is resting on ALL 4 clips and that the clips are securely attached to the pilasters.
8. Improper shelf clip installation could cause the shelf and / or the product on it to fall, resulting in damage to the unit and possible bodily injury.
9. Do NOT overload the shelves. The unit is designed to use all shelves that are supplied in an equally spaced manner. Contact Beverage-Air customer service if fewer shelves or a different configuration to ensure shelf overloading will not occur.

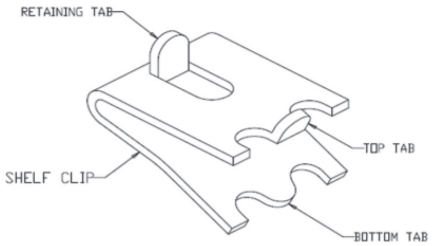

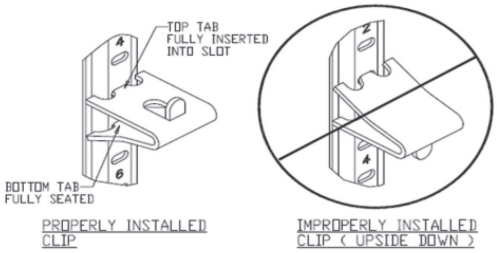

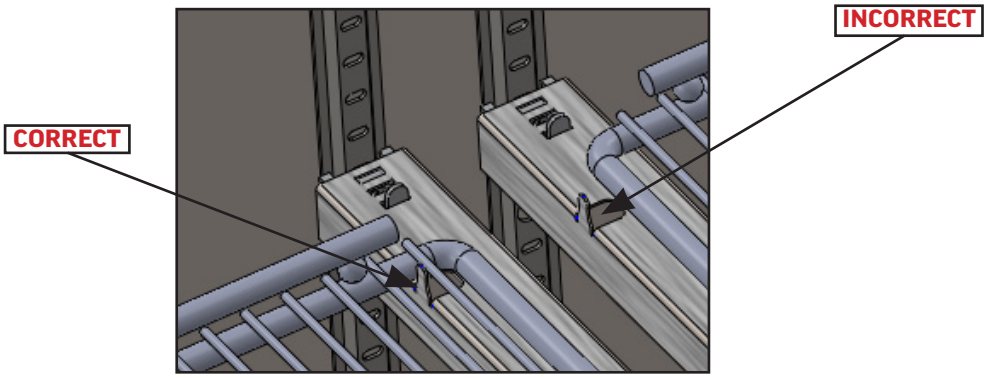

PROPERLY INSTALLED CLIPS

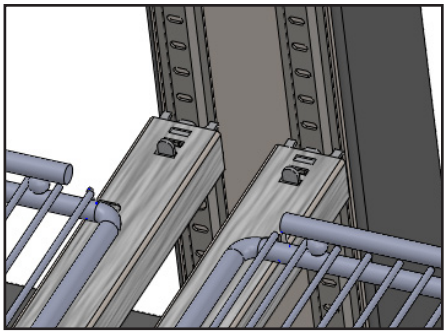

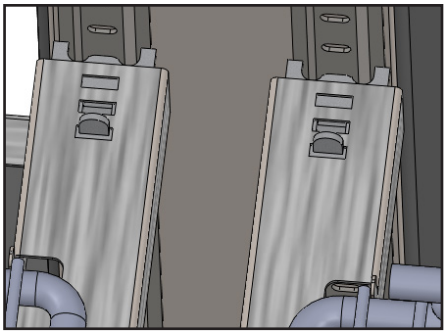

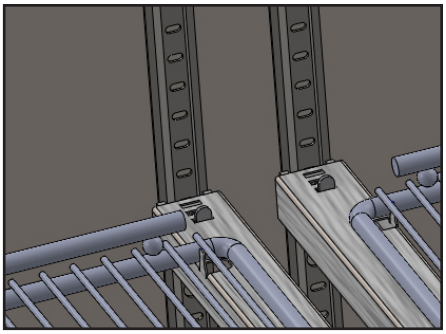

SLIDING GLASS DOORS

Adjusting Spring Tension on ClearCool®3000 & ClearCool®3100

The amount of tension used on the self-closing bottle slider doors can be decreased or increased by relocating the spring retaining grommet and self-drilling screw.

1. Hold door in open position to expose spring, grommet and screw in the header. Open only as far as required to keep the amount of tension to a minimum.

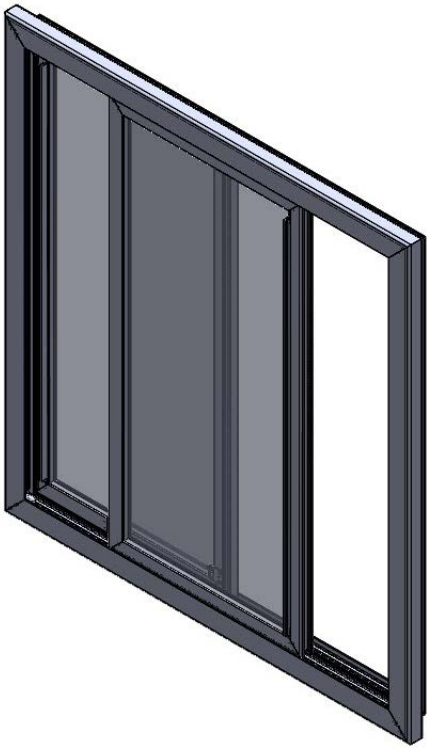

2. Look into Header and note the 3 square cut outs.
   1. Inner location is for minimum tension.
   2. Mid location is for mid-range tension.
   3. Outside location is for maximum tension.

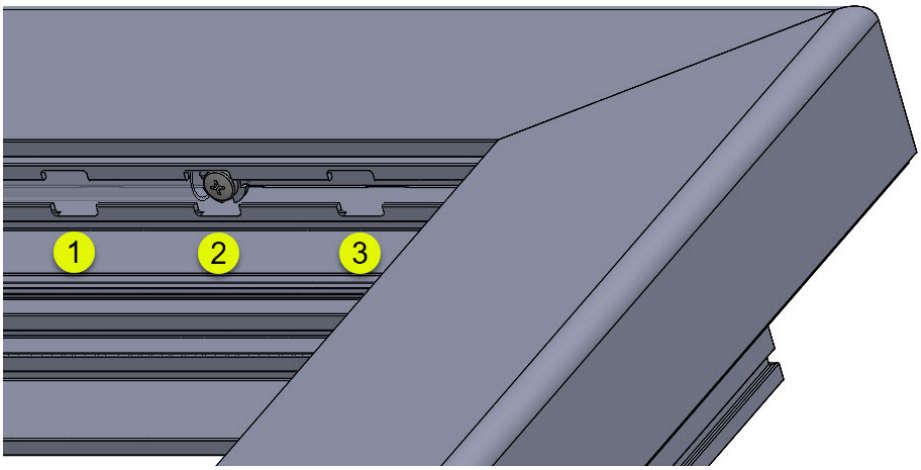

1

ELECTRICAL

This is a cord-connected unit, and must be connected to its own **dedicated** power supply. Check the dataplate on the machine to confirm the voltage and per the dataplate use the correct fuses or HACR circuit breakers.

Note: Do not connect to GFI / GFCI outlets. Connection to that type of outlet can result in product loss due to unsafe cabinet temperature when GFI device trips from moisture.

Power Cord

This 115 volt model is equipped with a cord and 5-15P plug.

If the power cord becomes damaged, it must be replaced with the identical cord.

Follow All National and Local Codes

This Unit Must Be Grounded. Do not use extension cords and do not disable or by-pass ground prong on electrical plug.

Initial Start Up

Plug the power cord into the proper power supply.

The cabinet will soon begin to blow warm air out of the top area, and cool air will flow from the inside blower.

The cabinet temperature has been set at the factory and should not need adjustment, however if it was changed, the standard setting is 38° F.

Cautions

Care must be taken whenever moving or servicing the unit. The refrigerant is contained in a sealed system, but if released it may be flammable.

Door Reversal Instructions

1. Remove hinge cover.
2. Remove door from the unit including the hinge mounting brackets
3. Remove white hole covers from the side of the door opening you would like the hinges to be located (do not throw away).
4. On the bottom of the door the same hole plugs are present and need to be removed.
5. Take the hole plugs and insert them into the screw holes where the hinges were originally located on the unit.
6. Install the hinge bracket upright on the unit. The thick portion of the hinge bracket should be on the bottom as you mount them.
7. The door portion of the hinges need to be removed and rotated 180 degree and remounted.
8. Install the hole plugs that were removed from the bottom of the door into the holes where the handle was first mounted.
9. Slide door back into position and gently lower into the white pivot cam.
10. Replace hinge cover.

USING THE UNIT - DANFOSS CONTROLLER

Operation is simple, just keep it connected to the correct power supply and the refrigerator will maintain the internal temperature it has been set to. Keep the doors and / or drawers closed as much as possible to avoid unnecessary run time.

The controller displays the current internal temperature.

Adjusting the set temperature lower will NOT cause the system to lower the temperature faster. When on, the refrigeration system is always operating at maximum.

The temperature was set at the factory at 38˚ F, but you can adjust it to your own selected temperature. 30 seconds after adjustment, the display automatically reverts to showing the current temperature.

The Refrigerator will automatically defrost as needed, there is no set time for defrost. Push and immediately release the "melting" or defrost button for a manual defrost.

Note: Holding the defrost button in too long will shut the controller off.

The internal fan will be on when the compressor is on and when the doors are closed.

The compressor and condenser fan motor will only be on when the controller senses an increase in internal cabinet temperature passed the set point.

If equipped with glass doors, holding the SC button in will turn the cabinet light on or off.

In most cases the only thing displayed will be the cabinet temperature. When something other than normal operation has occurred, a message will be shown.

Message Displayed	Why	What to do
dEF	Unit is defrosting	Nothing. Normal operation.
Hi	Cabinet temperature too warm	Confirm doors or drawers are closed.
dOr	Door is open	Close door, if message does not change, call for service.
LEA	Compressor run time too long	Check doors closed. If yes, call for service.
E01, E02, E03, E04	Sensor unplugged or has failed	Call for service.

SEQUENCE OF OPERATIONS REFRIGERATOR

The refrigerator operates based on the air temperature measured by the probe located at the return air.

	ON		OFF	
COMPONENT	OPERATION	CONTROLLER ACTION	OPERATION	CONTROLLER ACTION
COMPRESSOR	Compressor turns on when the air temperature at the probe is above the sum of the set point +2	The Compressor Contact is energized (ERC 112 – Terminal #1)	Compressor turns off when the air temperature at probe is equal to or less than the set point -2	The Compressor Contact is de-energized (ERC 112 – Terminal #1)
CONDENSER FAN	The Condenser Fan turns on when the Compressor is running	The Condenser Fan is wired directly to the Compressor, not through the controller	The Condenser Fan turns off when the Compressor is not running	The Condenser Fan is wired directly to the Compressor, not through the controller
EVAPORATOR FAN	The Evaporator Fan runs continuously in refrigerators. When the unit is plugged in, the Evaporator Fan will run.	The Evaporator Fan is connected directly to incoming power, not through the controller.	The Evaporator Fan runs continuously. When the unit is plugged in, The Evaporator Fan will run.	The Evaporator Fan is connected directly to incoming power, not through the controller.
LIGHT	The light will turn on when the (sc) is pressed (or when the door is opened with solid doors)	The Light Contact is energized (ERC 112 – Terminal #4)	The light will turn off when the (sc) is pressed (or when the door is closed with solid doors)	The Light Contact is de-energized (ERC 112 – Terminal #4)

Condition	Compressor	Condenser Fan	Evaporator Fan	Lights
Cabinet Temp > Set point + 2	ON	ON	ON	ON or OFF
Cabinet Temperature <= Set point - 2	OFF	OFF	ON	ON or OFF
Defrost	OFF	OFF	ON	ON or OFF

Electronic Controller

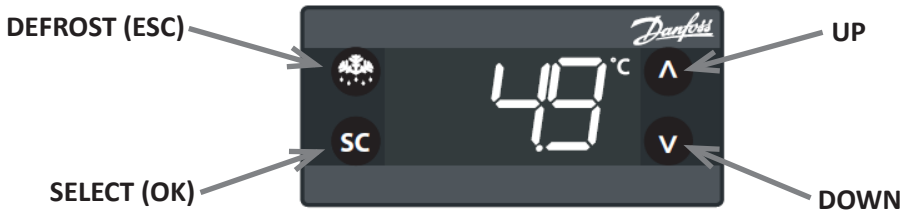

Control Panel Display

	Defrost LED			**Alarm LED**	
	On fixed:	Defrost active		On fixed:	ALARM Present
	Off:	Defrost is off		Flashing:	ALARM Silenced
				Off:	No Alarm
	Fan LED			**Compressor LED**	
	On fixed:	Fan active		On fixed:	Compressor active
	Off:	Fan Off		Flashing:	Delay, protection or activation blocked
				Off:	No Alarm

NOTE: When switched on, the instrument panel performs a lamp test for a few seconds.

Keyboard Functions

▲	▼		SC
UP	**DOWN**	**DEFROST (ESC)**	**SET (ENTER)**
Quick press and release	**Quick press and release**	**Quick press and release**	**Quick press and release**
• Increases Set Point	• Decreases Set Point	• Activates manual defrost	• Toggles lights on/off
Long press and release	**Long press and release**	**Long press and release**	**Long press and release**
• Increases display brightness	• Decreases display brightness	• Controller enter stand-by mode	• Toggles display °F/°C

Note: When the controller is in a Standby Mode, a blue dot will be displayed as shown here. To switch out of Standby Mode, push and hold the Defrost button until the display reads ON.

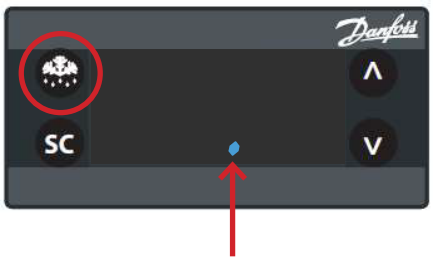

Control Panel Connections

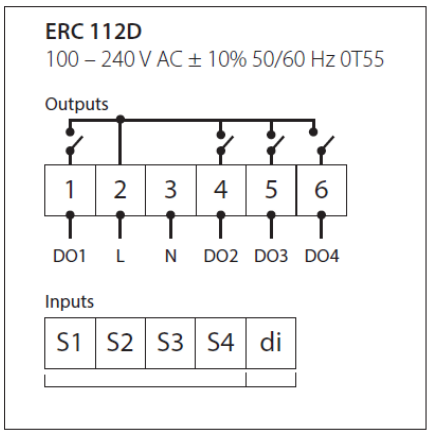

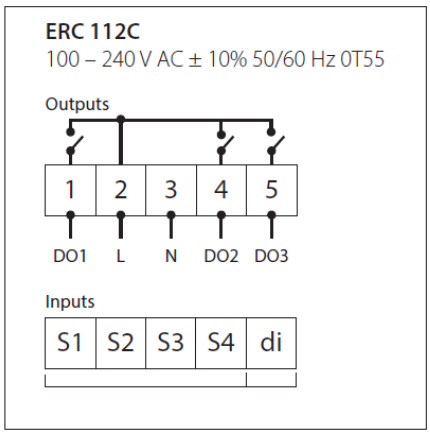

Changing the Set point

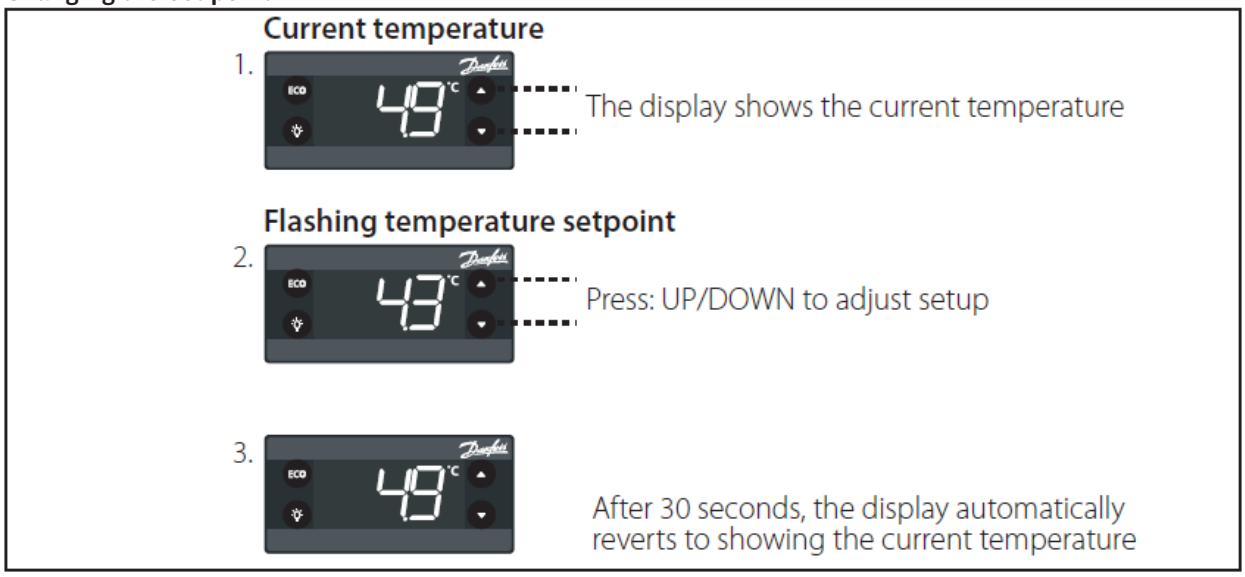

The alarm condition is always signaled by the alarm icon .

Press any button to silence the alarm, the relative icon will continue flashing.

Alarm Code	Trigger	Automatic Clearance	Outputs	Comments
"Hi"	Air temperature is higher than "ALA->Hat• for "ALA->Htd"	User configured	Blink "Hi" with the highest temperature; If configured: cut in alarm relay, beep the buzzer	High temperature alarm
"Lo"	Air temperature is lower than "LAt" for "Ltd"	User configured	Blink "Lo" with the lowest temperature. If configured: cut in alarm relay, beep the buzzer	Low temperature alarm
"Con"	Condenser temperature is too high or too low	User configured	Blink "Con". If configured: cut in alarm relay, beep the buzzer	Condenser alarm
"dor"	Door open for more than	Always	Blink "dor". If configured: cut in alarm relay, beep the buzzer	Door open alarm
"uHi"	Line voltage is higher than "Cop->uHi"	Always	Blink "uHi". If configured: cut in alarm relay, beep the buzzer	High voltage alarm
"uLi"	Line voltage is higher than "Cop->uLi"	Always	Blink "uLo". If configured: cut in alarm relay, beep the buzzer.	Low voltage alarm
"LEA"	Compressor continuous running for more than "ALA->LEA"	Always	Blink "LEA". If configured: cut in alarm relay, beep the buzzer	Leakage alarm
"E01"	"S1" error	Always	Blink "E0l ". If configured: cut in alarm relay, beep the buzzer	"S1" sensor failure (short or open)
"E02"	"S1" error	Always	Blink "E02". If configured: cut in alarm relay, beep the buzzer	"S2" sensor failure (short or open)
"E03"	"S1" error	Always	Blink "E03 ". If configured: cut in alarm relay, beep the buzzer	"S3" sensor failure (short or open)
"E04"	"S1" error	Always	Blink "E04 ". If configured: cut in alarm relay, beep the buzzer	"S4" sensor failure (short or open)

How to Acknowledge Alarms:

NOTE: If alarm exclusion times are in progress (**ALA** folder of the parameter table), the alarm is not signaled.

1.

The alarm code flashing alternately with the temperature and the alarm symbol is displayed

Press any button to acknowlege

2.

After the acknowledge the temperature is displayed and the alarm symbol remains shown

USING THE UNIT - ELIWELL CONTROLLER

Operation is simple, just keep it connected to the correct power supply and the refrigerator will maintain the internal temperature it has been set to. Keep the doors and / or drawers closed as much as possible to avoid unnecessary run time.

The controller displays the current internal temperature.

Adjusting the set temperature lower will NOT cause the system to lower the temperature faster. When on, the refrigeration system is always operating at maximum.

The temperature was set at the factory at 35° F, but you can adjust it to your own selected temperature. 30 seconds after adjustment, the display automatically reverts to showing the current temperature.

The refrigerator will automatically defrost as needed, there is no set time for defrost. Push and immediately release the "melting" or defrost button for a manual defrost.

The internal fan will be on when the unit is plugged in.

The compressor and condenser fan motor will only be on when the controller senses an increase in internal cabinet temperature passed the set point.

If equipped with glass doors, pressing the down button in will turn the cabinet light on or off.

In most cases the only thing displayed will be the cabinet temperature. When something other than normal operation has occurred, a message will be shown.

Message Displayed	Why	What to do
dEF	Unit is defrosting	Nothing. Normal operation.
AH1	Cabinet temperature too warm	Confirm doors or drawers are closed.
OPd	Door is open	Close door, if message does not change, call for service.
E1, E2, E3, E4	Sensor unplugged or has failed	Call for service.

SEQUENCE OF OPERATIONS REFRIGERATOR

The refrigerator operates based on the air temperature measured by the probe located at the return air.

	ON		OFF	
COMPONENT	**OPERATION**	**CONTROLLER ACTION**	**OPERATION**	**CONTROLLER ACTION**
COMPRESSOR	Compressor turns on when the air temperature at the probe is above the sum of the set point + 4	The Compressor Contact is energized (EW+978 - Terminal #1)	Compressor turns off when the air temperature at probe is equal to or less than the set point	The Compressor Contact is de-energized (EW+978 - Terminal #1)
CONDENSER FAN	The Condenser Fan turns on when the Compressor is running	The Condenser Fan is wired directly to the Compressor, not through the controller	The Condenser Fan turns off when the Compressor is not running	The Condenser Fan is wired directly to the Compressor, not through the controller
EVAP FAN	The Evaporator Fan turns on when the unit is powered on.	The Evaporator Fan is wired to constant power Some models will be wired to the fan relay (EW+978 - Terminal #3)	The Evaporator Fan turns off when the unit is unplugged or put into standby.	The Evaporator Fan is wired to constant power Some models will be wired to the fan relay (EW+978 - Terminal #3)
LIGHT	The light will turn on when the down button is pressed (or when the door is opened with solid doors)	The Light Contact is energized (Ew+978 – Terminal #2)	The light will turn off when the down button is pressed (or when the door is closed with solid doors)	The Light Contact is de-energized (Ew+978 – Terminal #2)

Condition	Compressor	Condenser Fan	Evaporator Fan	Lights
Cabinet Temp > Set point + 4	**ON**	**ON**	**ON**	**ON or OFF**
Cabinet Temperature <= Set point - 4	**OFF**	**OFF**	**ON**	**ON or OFF**
Defrost	**OFF**	**OFF**	**ON**	**ON or OFF**

Controller Symbols

	Reduced SET / Economy Permanently on: Energy Saving Mode Flashing: Reduced Set Mode Quick Flashing: Access to level 2 parameters	AUX	**AUX** Permanently on: Aux Active Flashing: Deep Cooling Cycle Active
	Compressor Permanently On: Compressor Active Flashing: Delay, protection or blocked start-up		**Defrost** Permanently on: Defrost Active Flashing: Manual or D.I. activation
	Alarm Permanently on: Alarm Active Flashing: Alarm Acknowledged		**Fan** Permanently on: Fans Active
°C	**Celsius** Permanently On: ˚C Setting	°F	**Fahrenheit** Permanently on: ˚F Setting

Controller Buttons

	Up Press and release • Scrolls through menu items • Increases Values Press for at least 5 seconds • Activates the manual defrost		Stand-by Press and release • Returns to the previous menu level • Confirm parameter value Press for at least 5 seconds • Activates the stand-by function
	Down Press and release • Scrolls through menu items • Decreases values Press for at least 5 seconds • Turn light on/off	set	Set (Enter) Press and release • Displays alarms • Opens the machine status menu Press for at least 5 seconds • Opens the programming menu • Confirms commands

Alarms are always indicated by the buzzer (if present) and the alarm icon. To switch off the buzzer, press and release any key, the relative icon will continue to flash.

NOTE: If alarm exclusion times have been set (see AL folder in the parameters table), the alarm will not be signaled.

Alarm Code	Trigger	Automatic Clearance	Outputs	Comments
"AH1"	Pb1 probe HIGH Temperature alarm	User configured	Label AH1 displayed alternately with the actual value read by the probe Pb1	High temperature alarm
"AL1"	Pb1 probe LOW Temperature alarm	User	Label AL1 displayed alternately with the actual value read by the probe Pb1	Low temperature alarm
"OPd"	Door open for more than	Always	Label OPd displayed alternately with the actual value read by probe Pb1	Door open alarm
"E1"	"E1" error	Always	Blink “E1 ". If configured: cut in alarm relay, beep the buzzer	"PB1" sensor failure (short or open)
"E2"	"E2" error	Always	Blink "E2". If configured: cut in alarm relay, beep the buzzer	"PB2" sensor failure (short or open)
"E3"	"E3" error	Always	Blink "E3 ". If configured: cut in alarm relay, beep the buzzer	"PB3" sensor failure (short or open)
"E4"	"E4" error	Always	Blink "E4 ". If configured: cut in alarm relay, beep the buzzer	"PB4" sensor failure (short or open)

CLEANING AND MAINTENANCE

Cleaning Schedule:

Cabinet	Condenser coil	Gaskets	Routine maintenance
Daily wipe down Weekly interior	Quarterly cleaning	Daily inspection, check that hinges are tight to the cabinet.	Annually

Daily Exterior Cleaning

It is much easier to clean on a regular basis than to have to remove stains once they have built up.

1. Wash with a clean sponge and a mild detergent that does not contain chlorine.
2. Rinse with clean water.
3. Dry with a soft cloth.
4. Polish with a soft cloth, wiping with the grain.
5. Wipe weekly with stainless steel cleaner.

Weekly Interior Cleaning

1. Remove all food, food related items and shelves. Store the food at a safe temperature.
2. Disconnect power to the unit (unplug it or switch the breaker off).
3. Remove all loose food particles from the inside walls, floor, door liner and ceiling.
4. Scrub all interior surfaces and door gaskets with a warm (100°F to 110°F) detergent solution and a soft scrub brush.
5. Rinse with clean water and allow to air dry.
6. Return the shelves to the unit and secure them.
7. Restore power.
8. Return food to the unit when it has reached a safe temperature.

CONDENSER CLEANING

Keeping the condenser coil clean is critical to efficient operation.

1. Unplug unit from power supply.

CAUTION **Rotating fan blade can cause personal injury.**

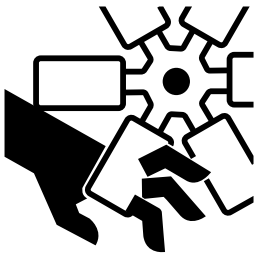

Unplug unit from power supply before beginning to clean condenser

2. Remove two Phillips head screws from the top corners of the front panel
3. Lift upwards on the front panel to remove
4. To reinstall the front panel line up the keeper screws behind the panel and firmly pull downwards
5. Reinstall the screws on the top corners
6. Examine condenser surface, if dusty, brush and vacuum the dust and lint from the surface of the coil. Brush up and down to avoid damaging the fins. Use care to not disturb the wires connected to the controller.

   Note: If the coil is greasy, the coil will need to be cleaned with coil cleaner and that should be left to an experienced technician.

7. Return grill to unit.

   Note: Air filters are not recommended as they restrict the flow of cooling air.

Remove Screw

Push Panel Up to Release From Screw Heads Behind Panel

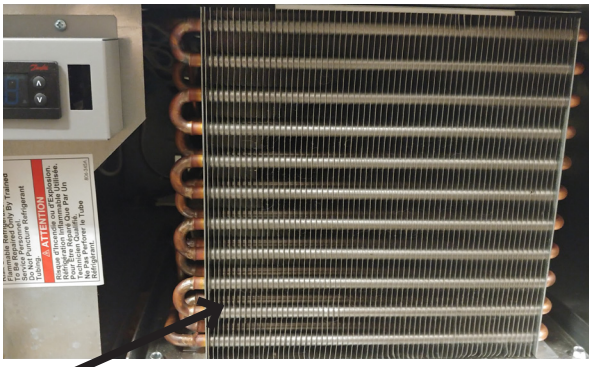

Condenser Surface

METHODS FOR CLEANING STAINLESS STEEL

Cleaning Needed	Cleaning Agent	Method of Application	Affect on Finish
Smears and fingerprints	Areal 20, Lac-O-Nu, Lumin Wash O'Cedar Cream Polish, Stainless Shine.	Rub with cloth as directed on the package.	Satisfactory for use on all finishes. Provides barrier film to minimize prints.
Stubborn Spots and Stains, Baked-On Splatter, and Other Light Discolorations	Allchem Concentrated Cleaner.	Apply with damp sponge or cloth. Rub with damp cloth.	Use in direction of polish lines on No. 4 (polished) finish. May scratch No. 2 (mill) and Nos. 7 and 8 (polished) finishes.
	Samae, Twinkle or Cameo Copper Cleaner	Rub with damp cloth.	
	Grade FFF Italian pumice, whiting, or talc.	Rub with dry cloth.	
	Liquid NuSteel Paste NuSteel or DuBois Temp. Copper's Stainless Steel Cleaner Revere Stainless Cleaner Household cleansers, such as Old Dutch, Lighthouse, Sunbrite, Wyandotte, Bab-O, Gold Dust, Sapolio, Bon Ami, Ajax, or Comet Grade F Italian Pumice, Steel Bright, Lumin Cleaner, Zud, Restore, Sta-Clean, or Highlite. Penny-Brite or Copper-Brite.	Use small amount of cleaner. Rub with dry cloth using a small amount of cleaner. Apply with damp sponge or cloth. Rub with a damp cloth. May contain chlorine bleaches. Rinse thoroughly after use. Rub with a damp cloth. Rub with a dry cloth using a small amount of cleaner.	
Heat tint or discoloration	Penny-Brite or Copper-Brite. Past NuSteel, DuBois Temp, or Tarnite. Revere Stainless Steel Cleaner. Allen Polish, Steel Bright, Tenacious Deposits, Rusty Discolorations, Industrial Atmospheric Stains Wyandotte, Bab-O or Zud.	Rub with a dry cloth. Rub with a dry cloth or stainless steel wool. Apply with damp sponge or cloth. Rub with a damp cloth.	
Burnt-On Foods and Grease Fatty Acids, Milkstone (where swabbing or rubbing is not practical)	Easy-Off, De-Grease-It, 4 to 6% hot solution of such agents as trisodium phosphate or sodium tripolyphosphate or 5 to 15% caustic soda solution	Apply generous coating. Allow to stand for 10-15 minutes. Rinse. Repeated application may be necessary.	Excellent removal, satisfactory for use on all finishes.
Tenacious Deposits, Rusty Discolorations, Industrial Atmospheric Stains	Oakite No. 33, Dilac Texo 12, Texo NY, Flash-Klenz, Caddy Cleaner, Turco Scale 4368 or Permag 57.	Swab and soak with clean cloth. Let stand 15 minutes or more according to directions on package, then rinse and dry.	Satisfactory for use on all finishes
Hard Water Spots and Scale	Vinegar. 5% oxalic acid, 5% sulfamic acid, 5 to 10% phosphoric acid, or Dilac, Oakite No. 33, Texo 12, Texo N.Y.	Swab or wipe with cloth. Rinse with water and dry. Swab or soak with cloth. Let stand 10-15 minutes. Always follow with neutralizer rinse, and dry.	Satisfactory for all finishes. Satisfactory for all finishes. Effective on tenacious deposits or where scale has built up.

HELP

Trouble Diagnosis for the User		
Malfunction	Possible Cause	Likely Solution
No cooling - unit is silent	Unit not plugged in. Fuse or circuit breaker tripped. Power cord plug loose in outlet.	Connect to proper voltage circuit Replace fuse or reset breaker. Check outlet for loose connection, replace as needed
Unit cools but seems to be on all the time	Dirty condenser	Clean condenser
Space temperature too high	Dirty condenser Evaporator iced over Unit in high temperature environment	Clean condenser Defrost evaporator Reduce temperature of room
Space temperature too low	Temperature control	Adjust or replace control
Trouble Diagnosis for the Technician		
No cooling - compressor does not hum	Temp control stuck in open position	Replace temp control.
No cooling - compressor hums but does not start	Low voltage to unit. Compressor starting system failure	Check voltage, correct as needed. Check start relay and start capacitor. See next step.
No cooling - compressor starts but shuts off	Compressor start relay failure Compressor start capacitor failure	Replace relay. Replace capacitor.
No cooling - compressor cycles on and off	Overheating weak overload	Clean condenser, check fan motor and blade. Check refrigerant charge. Replace overload.
Unit cools, but is slow to pull cabinet temperature down	Evaporator fan not turning	Check fan(s), on multiple fan units one fan may be turning slowly and will need to be replaced.
Unit cools but turns on and off frequently	No product in cabinet. Temperature control defective Refrigeration issue	Fill cabinet Replace control Have system checked
Makes excessive noise	Tubing rattle Loose parts Bent or broken fan blade Noisy fan motor	Check tubing for routing Check for loose components Replace fan blade Replace fan motor

FOR THE SERVICE TECH - R290

Refrigeration service should only be attempted by a trained trade professional certified to work on R290 systems.

Here are some critical service items.

This list does not qualify anyone to service the unit. It is a reminder and checklist for the service tech. Keep these in mind for **R290 service**:

- Wire nuts are NOT to be used when changing an electrical part.
- The switches in this product are sealed, **only exact replacements** may be used.
- The process tubes are to be used for service access.
- Cut out (with tubing cutter) refrigeration components that are to be replaced. Do NOT un-braze.
- Because R290 can be vented into the air during service, the venting MUST be in an area free from flame or spark. It must be near an opened window or door.
- A sign noting service of a system containing propane must be attached to the unit during refrigeration service.
- A combustible gas leak detector must be used to inform anyone in the area when propane is present in the air.

Other Information:

Evacuation: It is critical that a refrigeration system be leak free and internally dry. A thorough evacuation with a good vacuum pump with a micron gauge attached is the only way to ensure that the system is dry and ready for a charge of refrigerant.

Charging: The system is critically charged and the proper type and amount MUST be weighed in.

Overcharge symptoms: Unit will cool properly but the suction line temperature will be unusually cold. Compressor run time will be longer than normal.

Undercharge symptoms: Long run time, poor cooling and a hot compressor dome are the main symptoms of an undercharge.

FOR THE SERVICE TECH - WIRING DIAGRAM - DANFOSS

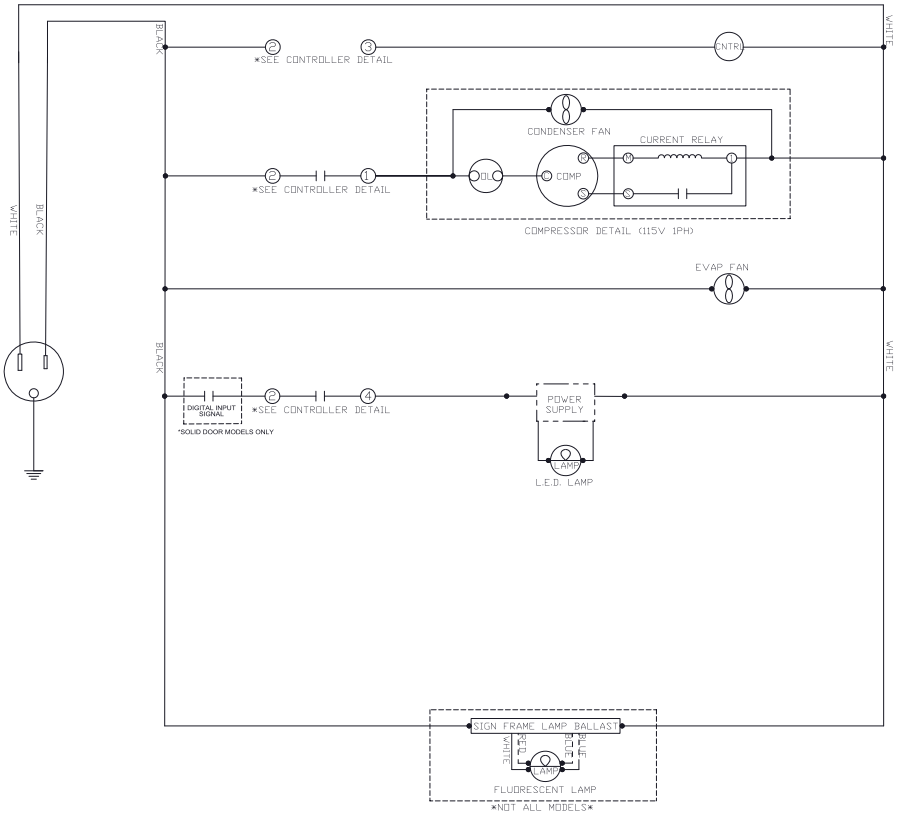

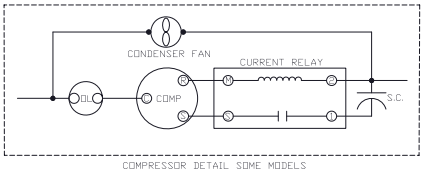

COMPRESSOR DETAIL SOME MODELS

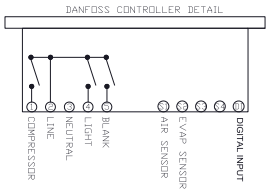

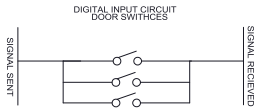

LEGEND

RC - RUN CAPACITOR
SC - START CAPACITOR
OL - OVERLOAD
○ - CONTROLLER TERMINAL
● - CONNECTION POINT
1CR - CONTROL RELAY

FOR THE SERVICE TECH - WIRING DIAGRAM - ELIWELL

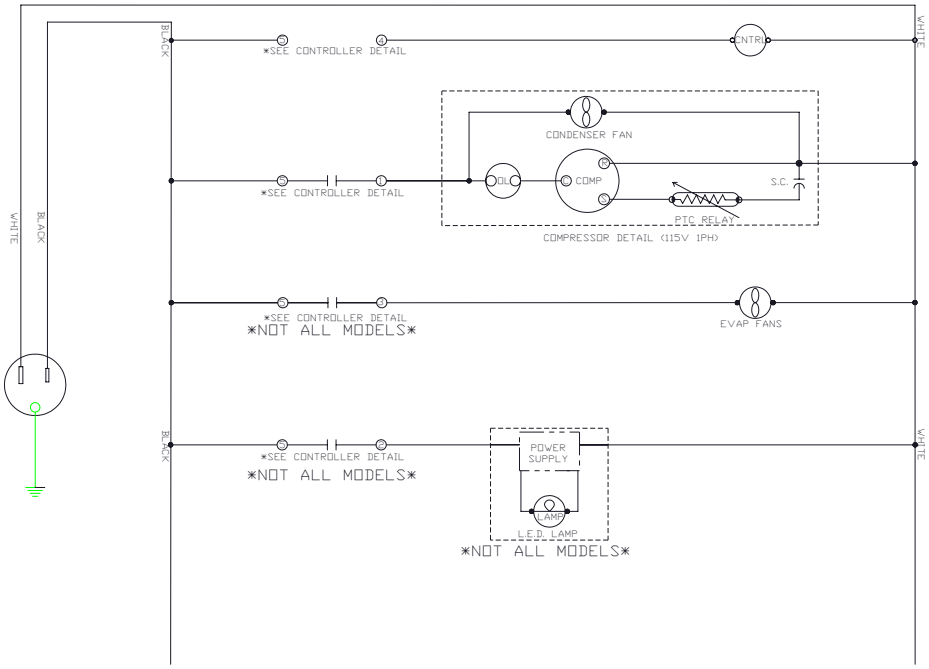

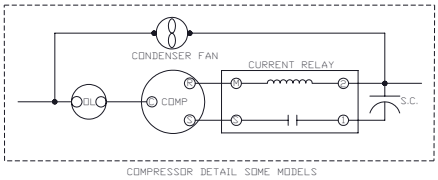

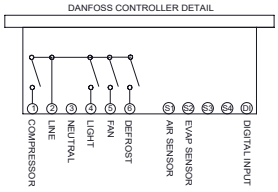

LEGEND

RC - RUN CAPACITOR
SC - START CAPACITOR
OL - OVERLOAD
(1) - DANFOSS CONTROLLER TERMINAL
● - CONNECTION POINT
ICR - CONTROL RELAY

UNITS WITH ELECTRONIC SMART LOCKS

- Automatically locks during power loss or when a temperature drop is sensed
- LED indicator to quickly view status
- Easy access test switch for health inspectors
- Built-in safety feature allows escape in case of accidental lock-in

MMR12HC-IQ
MMR23HC-IQ
MMR27HC-IQ

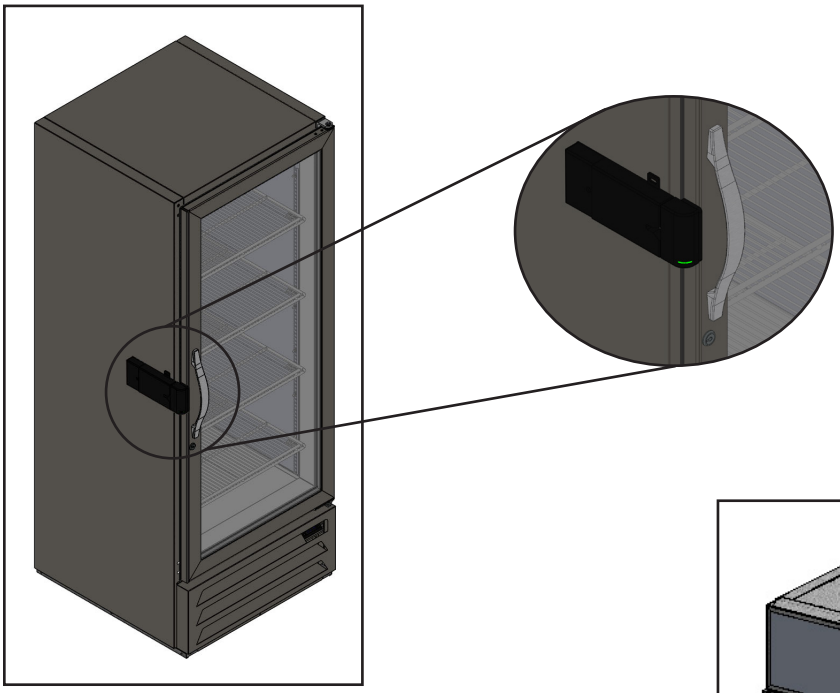

MMR44HC-IQ
MMR49HC-IQ

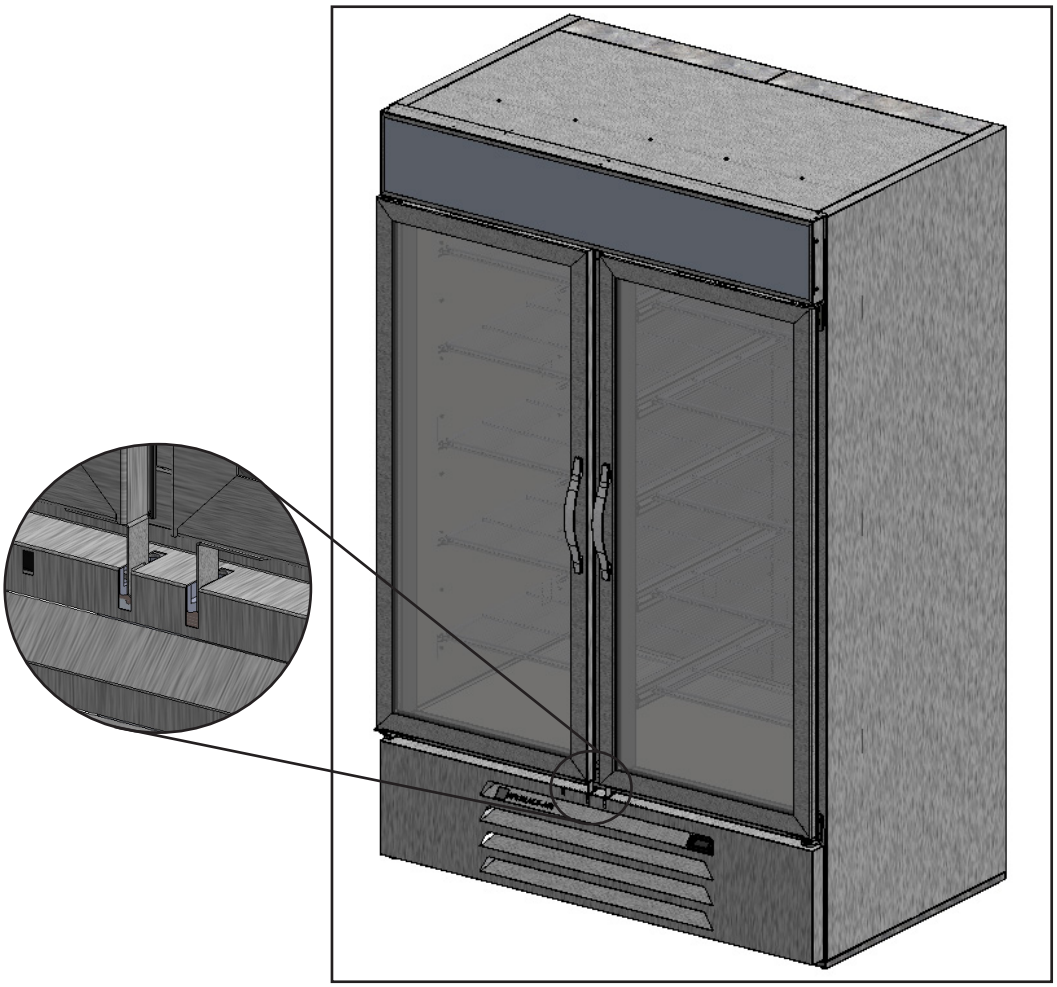

LIMITED WARRANTY

WARRANTY (Warranty valid in USA and Canada)

SEVEN (7) YEAR PARTS, LABOR AND COMPRESSOR WARRANTY:

Beverage-Air Corporation warrants to the original purchaser of Beverage-Air branded equipment, including all parts thereof, that such equipment is free from defects in material and workmanship, under normal use, with proper maintenance, and service as indicated by Beverage-Air installation and operation instructions, for a period of SEVEN (7) years from the date of installation, or eighty-eight (88) months from the date of shipment from the manufacturer, whichever is earlier (units shipped from July 1, 2024 are eligible for 7-year warranty). In addition, Beverage-Air warrants the hermetically/semi-hermetically sealed compressor (part only) for SEVEN (7) years; not to exceed eighty-eight (88) months from the date of shipment from Beverage-Air, provided upon receipt of the compressor, manufacturer examination shows the sealed compressor to be defective. This warranty does not cover freight for the replacement compressor or freight for the return of the failed compressor.

* Units shipped after 07/01/2024. Previous warranty applies to units shipped prior.

EXCEPTIONS:

- CT96 and CF3 models carry a ONE (1) year parts and labor warranty, limited to fifteen (15) months from date of shipment from Beverage-Air. These are excluded from additional compressor warranty.
- SR/SF (Slate) models carry a TWO (2) year parts and labor warranty, limited to twenty-seven (27) months from date of shipment from Beverage-Air.
- BZ, VM, CDR, DPCR, MT and Blast Chillers carry a THREE (3) year parts and labor warranty; additional TWO (2) years compressor part only.
- Units installed in Residential applications will be not covered under this warranty. Units are intended for Commercial use only.

Also, this compressor-part only warranty does NOT apply to any electrical controls, condenser, evaporator, fan motors, overload switch, starting relay, capacitors, temperature control, filter/drier, accumulator, refrigeration tubing, wiring harness, labor charges, or supplies which are covered by the warranty above.

Note: 3rd party extended warranties are not covered by this warranty statement.

Normal wear parts, as deemed by Beverage-Air, such as but not exclusive to, light bulbs/lamps and gaskets are not covered by this warranty. For the purpose of this warranty, the original purchaser shall be deemed to mean the individual or company for who the product was originally installed.

Units that utilize variable speed compressor technology can experience nuisance tripping on Class A GFCI outlets which have a trip limit of 4 mA to 6 mA. To avoid this issue in a location that requires GFCI circuit protection, Beverage-Air & Victory recommends using a HUBBELL Model Number GFRST83W 20A Heavy Duty Hospital Grade Self-Test GFCI Receptacle. Nuisance tripping not covered under warranty.

Our obligation under this warranty shall be limited to repairing or replacing, including labor, any part of such product, which proves thus defective. Beverage-Air reserves the right to examine any product claimed to be defective and request photos of the unit prior to dispatching service. Moisture or water damage is not covered under warranty. If service is deemed non-warranty, Beverage-Air reserves the right to bill the end user for service.

The labor warranty shall be for self-contained units only and for standard straight time, which is defined as normal service rate time, for service performed during normal working hours. All warranty labor will be covered at standard time. Any service requested outside of a servicer's normal working hours including weekends and any additional overtime will be at the responsibility of the equipment purchaser. Any part or accessory determined to be defective in the product should be returned to the company within thirty (30) days under the terms of this warranty and must be accompanied by a record of the cabinet model, serial number, and identified with a return material authorization number (RMA#) issued by the manufacturer.

Special installation/applications, including remote locations, are limited in coverage by this warranty. Any installation that requires extra work, and/or travel, to gain access to the unit for service is the sole responsibility of the equipment purchaser.

Improper operation resulting from factors, including but not limited to, improper or negligent cleaning and maintenance, improper installation, low voltage conditions, inadequate wiring, outdoor use (unless otherwise specified) and accidental damage are not manufacturing defects and are strictly the responsibility of the purchaser.

LIMITED WARRANTY (CONTINUED)

With the exception of Blast Chillers, the product is designed for maintaining temperature and not bringing food to a desired temperature and therefore cannot be held responsible for this function under warranty. Units must be in a conditioned environment or warranty will be void. Non-standard use of unit can also be subject to reduced or voided warranty.

Condensing coils must be cleaned at regular intervals as a part of preventative maintenance for optimal performance. Failure to do so is subject to a voided warranty. Although cleaning requirements vary in accordance with operation of various products, Beverage-Air recommends a minimum monthly cleaning.

NO CLAIMS CAN BE MADE AGAINST THIS WARRANTY FOR SPOILAGE OF FOOD, PRODUCTS, LOSS OF SALES OR CONSEQUENTIAL DAMAGES.

THE FOREGOING WARRANTIES ARE EXPRESSLY GIVEN IN LIEU OF ALL OTHER WARRANTIES, EXPRESS, IMPLIED, OR STATUTORY, INCLUDING THE IMPLIED WARRANTIES OF MERCHANTABILITY AND FITNESS FOR A PARTICULAR PURPOSE, WHICH ARE HERBY DISCLAIMED, ALL OTHER OBLIGATIONS OR LIABILITIES ON OUR PART, AND WE NEITHER ASSUME, NOR AUTHORIZE ANY OTHER PERSON TO ASSUME FOR US, ANY OBLIGATION OR LIABILITY IN CONNECTION WITH THE SALE OF SAID REFRIGERATION UNITS OR ANY PARTS THERE OF.

This warranty shall not be assignable and shall be honored only in so far as the original purchaser. This warranty does not apply outside the limits of the United States of America and Canada, nor does it apply to any part that has been subject to misuse, neglect, alteration, accident, or to any damage caused by transportation, flood, fire, acts of terrorism, or acts of God.

LIMITATION OF LIABILITY:

Beverage-Air Corporation or their affiliates shall not be liable for any indirect, incidental, special or consequential damages, or losses of a commercial nature arising out of malfunction equipment or its parts components thereof, as a result of defects in material or workmanship.

THE ORIGINAL OWNER'S SOLE AND EXCLUSIVE REMEDY AND BEVERAGE-AIR'S SOLE AND EXCLUSIVE LIABILITY SHALL BE LIMITED TO THE REPAIR OR REPLACEMENT OF PARTS OR COMPONENTS CONTAINED IN THE EQUIPMENT IDENTIFIED ABOVE WHICH UNDER NORMAL USE AND SERVICE MALFUNCTION AS A RESULT OF DEFECTS IN MATERIAL OR WORKMANSHIP, SUBJECT TO THE APPLICABLE PROVISIONS AND LIMITATIONS STATED ABOVE.

Note: Additional Terms and Conditions of sale may apply. Notice: Specifications are subject to change without notice. Contact Beverage-Air for specific model agency approval. All prices are ex-works Brookville, PA. July 1, 2024

Warranty Registration

Register your product online at **beverage-air.com/parts-service** or fill out and mail the form below.

Cabinet Model Number: _____ Date Of Installation: _____

Cabinet Serial Number: _____

Location Of Product

Business Name: _____

Business Street: _____

Business City: _____ State: _____ Postal Code:_____

Mail to: Beverage-Air, 3779 Champion Blvd, Winston-Salem, NC 27105

Rev. 03/26