CLEVELAND

Project _____
Item _____
Quantity _____
FCSI Section 11400 _____
Approved _____
Date _____

LEG TYPE, GAS-FIRED KETTLES

STATIONARY, 2/3 STEAM JACKETED "SPLASH PROOF SERIES"
40, 60, 80 or 100 GALLONS (150, 225, 300 or 337 LITERS)

Models

- KGL-40
- KGL-60
- KGL-80
- KGL-100



Short Form Specifications

Shall be CLEVELAND, Gas-fired Stationary Kettle, Model KGL-_____ ; _____ gallons. 2/3 Steam Jacketed, Power Burner Heating System, Insulated Heat Exchanger, 50 psi Steam Jacket Rating. Infinite Variable Temperature Control, L.E.D. indicators for Heat Cycle and Low Water Warning, spring-assisted Cover, 2″ Tangent Draw-off Valve with Drain Strainer, Automatic Ignition System. 316 Stainless Steel Interior.

Standard Features

- High efficiency Power Burner Heating System (62% to 65% efficiency)
- Fast Heat-up and Recovery Time, 140M BTU's on 40 gallon models, 190M BTU's on 60 gallon and larger
- Insulated Heat Exchanger
- Automatic Ignition System
- Steam jacket permanently filled with treated, distilled water. Venting and/or refilling not required
- Solid State Controls, for Temperature and Low Water Safety, in a plug-in Control Module
- Control Panel includes:
  - Precise, consistent temperature control: less than ± 1°C variance (ideal for simmering).
  - L.E.D. Indicators for Heat Cycle and Low Water
  - Warning.
  - Power "on/off" Switch
- Front mounted combination Pressure/Vacuum Gauge
- Type 316 Stainless Steel with #4 finish on kettle
- 2″ diameter Tangent Draw-Off Valve with Drain Strainer
- Support Legs with level adjustable feet, flanged for floor bolting
- Spring-assisted, hinged, rotatable, domed Stainless Steel Cover
- 50 PSI Steam Jacket Rating and Safety valve
- Standard voltage is 115 volts, 60 Hz, single-phase, supplied with cord and plug
- Standard for natural gas operation
- Faucet Mounting Bracket (FBK)
- Typical approvals include AGA, CSA, CE, NSF and ASME

Options & Accessories

- Hot and Cold Water Faucet with Swing Spout (DPK)
- Cooking Baskets and Tri-Basket Supports (BS and TBS)
- Drain Strainers (DS-)
- 3" diameter Tangent Draw-off Valve with Drain Strainer (TD3)
- Kettle Accessory Kit (KAK) includes:
  - Clean-up Brush (CB)
  - 36″ Kettle Paddle (KP)
  - 36″ Kettle Whip (KW)
  - 36″ Kettle Brush
  - Draw-Off Brush (DB)
  - 24 oz. Ladle (KL)
- Automatic Water Meter (GMF or LMF)
- Measuring Strip (MS)
- Option for Propane Gas operation
- Correctional Package
- Heat Deflector Shield (HS001)

KE004046-71

760 Beta Drive, Unit D
Mayfield Village, Ohio 44143

Tel 1.216.481.4900
Fax 1.216.481.3782
Email steam@clevelandrange.com

www.clevelandrange.com

WELBILT

CAPACITIES: (in 8 oz. servings, other sizes may be calculated)
40 Gallon / 150 liters . . . 640 servings
60 Gallon / 225 liters . . . 960 servings
80 Gallon / 300 liters . . . 1280 servings
100 Gallon / 375 liters . . . 1600 servings

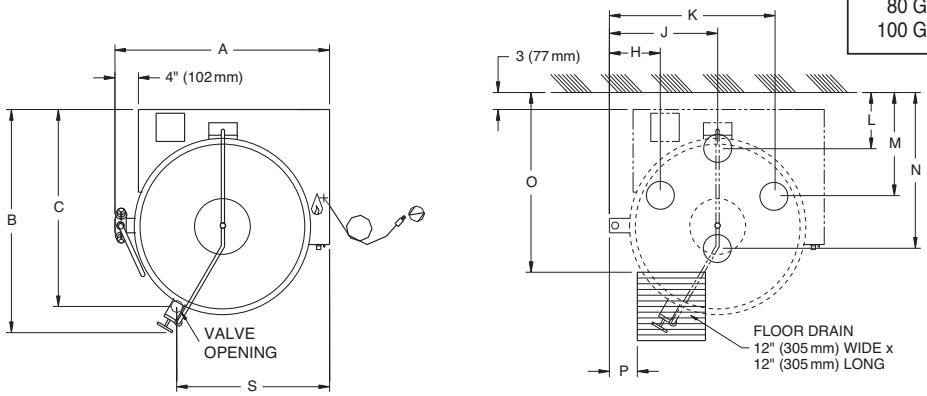

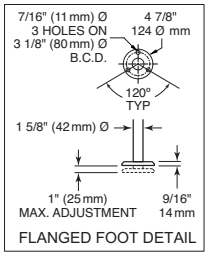

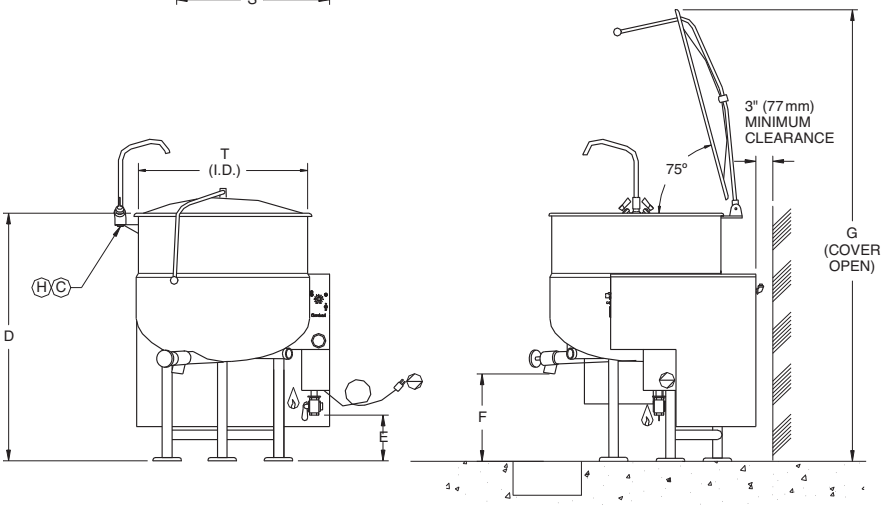

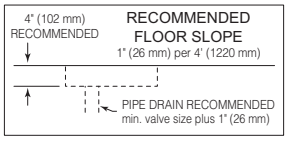

UNIT SHOWN WITH OPTIONAL 2" TANGENT DRAW-OFF VALVE, SPRING ASSIST COVER AND HOT & COLD WATER FAUCET.

DIMENSIONS

GALS./ LITERS		A	B	C	D	E	F	G	H	J	K	L	M	N	O	P	S	T I.D.
40	IN	35 1/8	37	32 1/4	40 1/2	9 1/4	16	71 1/2	9 9/16	17 3/4	25 15/16	10 3/8	18 5/8	26 7/8	28 1/2	4 5/8	24 1/2	26
150	mm	893	940	820	1029	235	407	1817	243	451	659	264	474	683	724	118	648	661
60	IN	38 1/4	39	34 1/4	43 1/2	8 3/4	14 1/4	75	8 15/16	19 1/8	29 5/16	10 3/8	18 5/8	27 7/8	30 1/4	5 1/4	27	29 1/2
225	mm	972	991	870	1105	223	362	1905	228	486	745	264	474	709	769	134	686	750
80	IN	41 5/8	42 3/8	35 1/2	45 1/2	8 3/4	15 1/2	79	9 1/4	20 3/4	32 1/4	10 3/8	18 5/8	29 5/8	31 1/2	6 5/8	29	33
300	mm	1058	1077	902	1156	223	394	2007	235	528	820	264	474	753	801	169	737	839
100	IN	44	43 1/2	36 1/2	47 1/2	8 3/4	15 1/2	83 1/2	9 1/8	21 7/8	34 5/8	10 3/8	18 5/8	31 1/4	32 1/2	7 1/2	30 1/2	35 1/2
375	mm	1118	1105	928	1207	22.3	394	2121	232	556	880	264	474	794	826	191	775	902

Shipping Weights & Dimensions

Model -
KGL-40 Weight - 454 lbs
Width - 44"
Depth - 44"
Height - 54"
KGL-40 Weight - 510 lbs
Width - 44"
Depth - 44"
Height - 54"
KGL-40 Weight - 597 lbs
Width - 56"
Depth - 55"
Height - 59"

GAS			ELECTRIC	WATER (H) (C)	CLEARANCE
NATURAL	PROPANE	B.T.U. RATING	120V-1 Phase, 60 Hz, 10 amps	(H) (C) ½" dia. Soft Copper Tubing (each) When ordered with optional faucet.	RIGHT = 3" LEFT = 3" REAR = 3" Allow 6" space minimum from rear and sides when located near combustible walls. 12" recommended on right side for service
Piping: ¾" N.P.T. Supply pressure: 4.00" W.C. minimum 14.00" W.C. maximum	Piping: ¾" N.P.T. Supply pressure: 4.00" W.C. minimum 14.00" W.C. maximum	40 gal. 140,000 60 gal. 80 gal. 190,000 100 gal.			
Manufacturer must be notified if unit will be operated above 2,000 ft. altitude.					

NOTES:
Cleveland Range reserves right of design improvement or modification, as warranted.
Many regional, state and local codes exist and it is the responsibility of the owner and installer to comply with the codes.
Cleveland Range equipment is built to comply with applicable standards for manufacturers. Included among those approval agencies are U.L/NSF#4 and CSA (AGA, CGA).

(NOT TO SCALE)

Gas Kettles