CLEVELAND

SHORT SERIES™ GAS-FIRED KETTLE

38″ RIM HEIGHT, FULL STEAM JACKETED Tilting,
"SPLASH PROOF SERIES" 40 Gallons (150 Liters)

Project _____
Item _____
Quantity _____
FCSI Section 11400 _____
Approved _____
Date _____

Gas Kettles

Models

- KGL-40-TSH



Shown with optional Spring Assisted Cover and 2" Tangent Draw-Off Valve

Short Form Specifications

Cleveland Gas-Fired Tilting Kettle, Model KGL-40-TSH, 37 1/2" rim height, Type 304 Stainless Steel and Supports, Fully Steam Jacketed, 50 psi Steam Jacket Rating, 140,000 BTU Double Pass Steam Generator, Power Burner System, Splash Proof Solid State Temperature Controls, Automatic Hot-Surface Ignition System.

Standard Features

- Support Legs with level adjustable feet, flanged for floor bolting.
- Type 304 Stainless Steel construction, with #4 finish on kettle and supports.
- Tilting Mechanism with permanently lubricated, Self-locking, Worm Drive of space saving design.
- 50 psi Steam Jacket Rating and Safety Valve.
- Standard for natural gas operation.
- Large pouring lip for easier, faster, pouring. Heavy-duty Rolled Rim design provides strong reinforcement, prevents damages from abuse.
- Standard voltage is 115 volts, 60 Hz, single phase, supplied with cord and plug.
- High efficiency Power Burner Heating System (62% to 65% efficiency).
- Fast Heat-up and Recovery Time, 140, 000 BTU firing rate.
- Automatic Hot-Surface Ignition System.
- Steam Jacket permanently filled with treated, distilled water. Venting and/or refilling not required.
- Splash-Proof Solid State Controls, for Temperature and Low Water Safety, in a plug-in Control Module.
- Control panel Includes:
  - Precise, consistent temperature control: less than ± 1°C variance (ideal for simmering).
  - L.E.D. Indicators for Heat Cycle and Low Water Warning.
  - Power "On/Off" Switch.
- Typical approvals include AGA, CSA, CE, NSF and ASME.

Options & Accessories

- 316 Stainless Steel Liner (316)
- 2" Tangent Draw-Off (TD2)
- Kettle Markings (KM)
- Spring Assist Cover (CHS)
- Lift Off Cover (CL)
- Basket Strainer (BS)
- Pan Carrier (PCK)
- Measuring Strip (MS)
- Food Strainer (FS)
- Steam Control Kit (SCK1)
- Hot and cold water faucet (DPK), or cold water (SPK). Requires faucet bracket (FBKT)
- 240 Volt, Single Phase Option
- Propane Gas Operation (LP)
- Correctional Packages
- Heat Deflector Shield (HS001)

KE004046-74 B

18301 St. Clair Street
Cleveland, OH 44110

Tel 1.216.481.4900
Fax 1.216.481.3782
Email steam@clevelandrange.com

www.clevelandrange.com

WELBILT

CLEVELAND

- CAPACITIES: (in 8 oz. servings, other sizes may be calculated)
  40 Gallon / 150 liters.....640

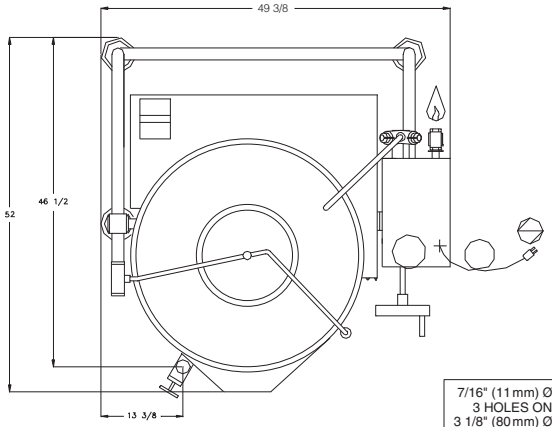

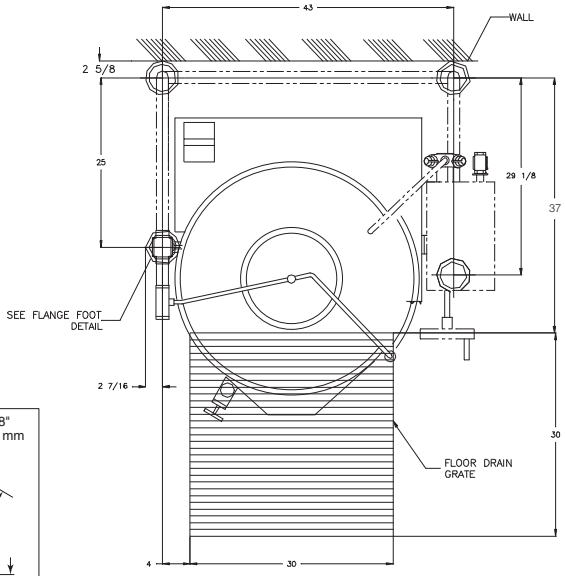

FOOT LOCATION & FLOOR DRAIN DETAIL

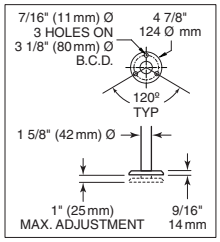

SEC. 'A–A'

FLANGED FOOT DETAIL

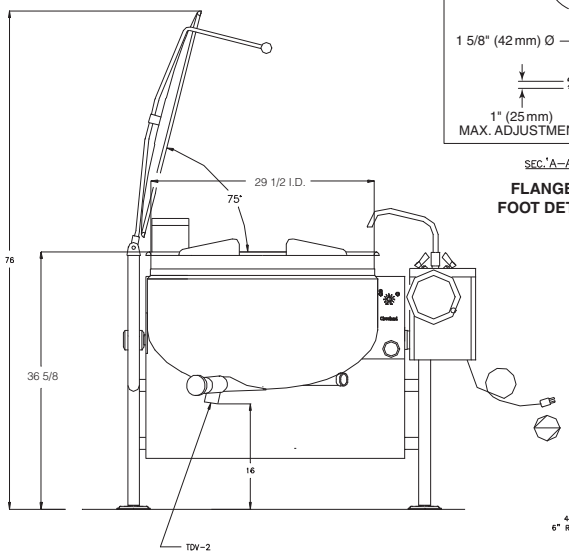

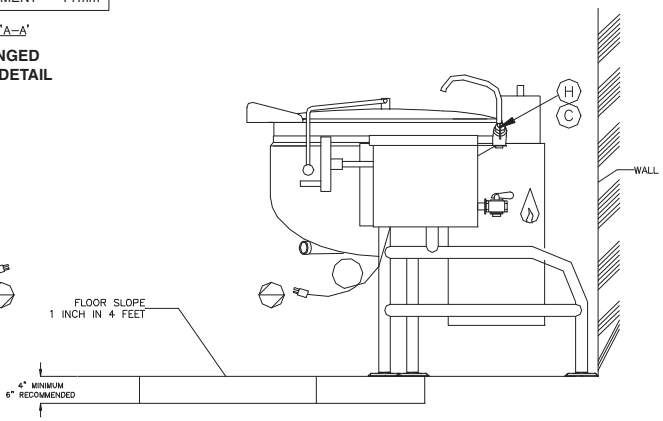

SPECIFICATIONS

MODEL	ELECTRICAL SUPPLY:				GAS SUPPLY: (PIPING 3/4 NPT)					APPROVALS				CLEARANCE:	SHIPPING WEIGHT
	VOLTS	PHASE	AMPS	FREQ	TYPE	BTU RATING	WATER COLUMN	BTU PER CU. FT.	SUPPLY PRESSURE	AGA	CGA	CE MARK	NSF		
KGL–40–TSH	120	1	10	60	NAT	140,000	3.5	1000	4" TO 14" W.C.	✓	✓		✓	RIGHT: 0 inches LEFT: 0 inches REAR: 3 inches	630 LBS.
	120	1	10	60	LP	140,000	3.5	2500	4" TO 14" W.C.	✓	✓		✓		
	220	1	5	50	NAT	140,000	3.5	1000	4" TO 14" W.C.			✓	✓	ALLOW 12" SPACE MINIMUM ON RIGHT SIDE FOR SERVICE	
	220	1	5	50	LP	140,000	3.5	2500	4" TO 14" W.C.			✓	✓		

NOTES

1. MANUFACTURER MUST BE NOTIFIED IF UNIT WILL BE OPERATING ABOVE 2,000 FOOT ALTITUDE.
2. CONSULT FACTORY FOR MANUFACTURED GAS.
3. ALL VERTICAL DIMENSIONS SHOWN ARE MINIMUM. FEET ARE ADJUSTABLE TO 1 INCH MAXIMUM.
4. UNIT COMES WITH 6' POWER CORD.

NOTES:
Cleveland Range reserves right of design improvement or modification, as warranted.
Many regional, state and local codes exist and it is the responsibility of the owner and installer to comply with the codes.
Cleveland Range equipment is built to comply with applicable standards for manufacturers. Included among those approval agencies are U.L/NSF#4 and CSA (AGA, CGA).

(NOT TO SCALE)

KE004046-74 B

Gas Kettles

18301 St. Clair Street
Cleveland, OH 44110

Tel 1.216.481.4900
Fax 1.216.481.3782
Email steam@clevelandrange.com

WELBILT