CLEVELAND

TRI-LEG, ELECTRIC KETTLES

STATIONARY, "SPLASH PROOF SERIES", SELF-CONTAINED, 2/3 STEAM JACKETED, 25, 40, 60, 80 OR 100 GALLONS (100, 150, 225, 300, OR 375 LITERS)

Project _____
Item _____
Quantity _____
FCSI Section 11400 _____
Approved _____
Date _____

Models

- KEL-25
- KEL-30
- KEL-40
- KEL-60
- KEL-80
- KEL-100



Short Form Specifications

Shall be CLEVELAND, Electric Kettle, Tri-leg mounted, self-contained, stationary, Model KEL - _____ gallons, 2/3 Steam Jacketed. Rated 50 psi with Safety Valve; Permanently filled Steam Jacket. Spring-assisted Domed Cover. (Provide 1.50″ Freeboard above batches of rated size.) Splash Proof Solid State Temperature (±1° C) and Safety Control System in plug-in Module including L.E.D. indicators. Base Mounted for Floor Bolting with three (3), tri-bolt flanges. 2″ diameter Tangent Draw-off Valve. 316 Stainless Steel Interior. IPX6 Water Rated.

Standard Features

- Self-contained, easily installed - needs only an electrical hook-up
- Steam jacket filled with treated water, venting and/or refilling is not required
- Accurate, consistant solid state temperature controls (mechanical thermostat not as accurate) - less than ±1°C variance (ideal for simmering). Operating temperature range from 145° - 260°F (63°C - 127°C)
  Control panel includes:
- LED indicator for heat cycle • LED indicator for low water
- Power ON/OFF switch • Adjustable temperature control dial
- Water resistant controls, splash-proof construction
- Large pouring lip for high capacity and chunky products
- Re-inforced rolled rim design prevents damage to kettle rim, eliminates "bar rim designs"
- Welded-in heating elements, (holds vacuum better, won't leak or lose water)
- Easily cleaned: kettle and all exterior surfaces are of type 304 stainless steel with an #4 finish
- Rear mounted easy access pressure gauge and pressure relief valve to prevent tampering. Color coded easy to read pressure gauge with "green" and "vent air zone"
- 50 psi steam jacket rating for higher cooking temperatures
- 50 psi safety valve
- Solid state water level control (no sight glass gauge to break or leak)
- Splash proof element cover with a double gasket seal
- Tilt mechanism of roller bearings and case hardened self-locking worm and segment gear
- 1 5/8″ O.D. tri-leg supports with level adjustable feet for floor bolting
- Standard voltage is 208-240 volts, 60 Hz, 3-phase, 3-wire
- Typical approvals include UL., CSA, CE, NSF and ASME
- 316 Stainless Steel Interior

Options & Accessories

- Spring-assisted, hinged, rotatable, domed Stainless Steel Cover (CHS)
- 2″ or 3" diameter Tangent Draw-Off Valve (TD2 or TD3*), *TD3 for 60 gallon only and will raise height of kettle by 5-5/8" (143mm)
- Hot and Cold Water Faucet with Swing Spout and Mounting Bracket (DPK and FBKT)
- Pan Carrier (PCK)
- Flow Diverter (FD)
- Food Strainers (FS)
- Cooking Baskets and Tri-Basket Supports (BS and TBS)
- Kettle Accessory Kit (KAK) includes:
  - Clean-up Brush (CB)
  - 36″ Kettle Paddle (KP)
  - 36″ Kettle Whip (KW)
  - 36″ Kettle Brush
  - Draw-Off Brush (DB)
  - 24 oz. Ladle (KL)
- Automatic Water Meter (GMF or LMF)
- Drain Strainers (DS-)
- Water Meter Stand (SWM)
- Lift-Off Covers (CL)
- Measuring Strip (MS)
- Gallon Markings (KM)
- Hot and cold or cold only Kettle Filler with 60″ Hose (DKF-K or SKF-K)
- Swing Funnels for drain (SW)
- High Wattage (HW) (see back page)
- Special Voltages (see back page)
- Heat Deflector Shield (HS001)
- Correctional Packages

KE004046-60

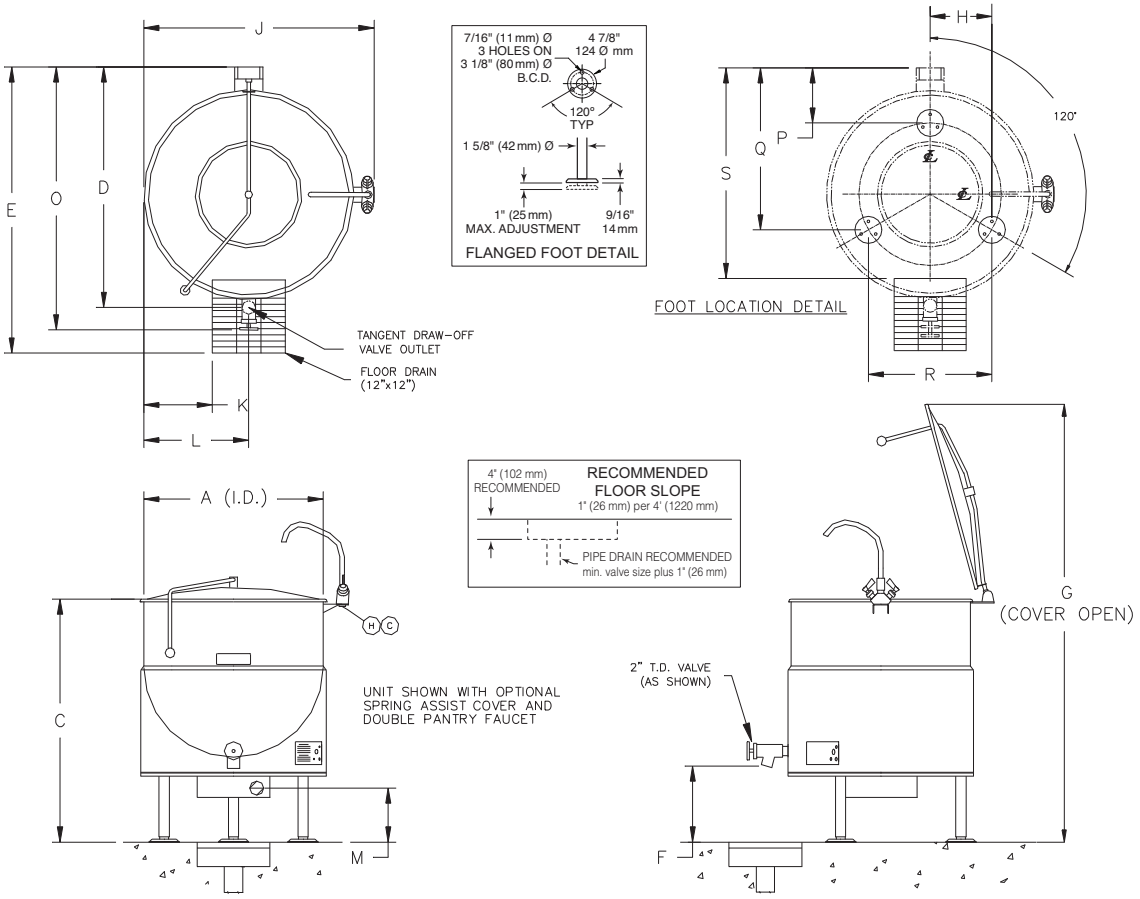

DIMENSIONS

GALS./ LITERS		A	C	D	E	F	G	H	J	K	L	M	N	O	P	Q	R	S
25/	IN	21	36 3/4	21 7/8	34	13 7/8	60 3/4	17 7/8	29 7/8	5 1/4	11 1/4	9 3/4	7 1/2	26 3/4	4 5/8	20	15 1/2	22 3/8
100	mm	534	934	556	864	353	1544	455	759	134	286	248	191	680	118	508	394	569
30/	IN	24	38	24 7/8	37	15 5/8	65 1/4	20 7/8	28 3/4	6 3/4	12 3/4	11 1/2	9 1/4	29 3/4	4 5/8	20 1/4	18 1/8	25 3/8
115	mm	610	966	632	940	397	1658	531	731	172	324	299	293	756	118	515	461	645
40/	IN	26	40	29 1/8	40	15 1/8	69 1/2	22 7/8	30 3/4	7 3/4	13 3/4	11	8 3/4	34	4 5/8	21 3/4	19 7/8	28 5/8
150	mm	661	1016	740	1016	385	1766	582	782	197	350	280	223	864	118	553	505	728
60/	IN	29 1/2	43	33	44	14 5/8	75 3/4	26 3/8	34 1/4	9 1/2	15 1/2	10 1/2	8 1/4	37 7/8	5 1/8	27 1/2	22 7/8	32 1/2
225	mm	750	1093	839	1118	372	1925	670	870	242	394	267	210	963	131	699	582	826
80/	IN	33	43 1/2	36 5/8	47	13	79 1/2	29 7/8	37 3/4	11 1/4	17 1/4	9	6 3/4	41 1/2	5 1/8	29 3/8	25 7/8	35 7/8
300	mm	839	1105	931	1194	331	2020	759	959	286	439	229	172	1055	131	747	658	912
100/	IN	35 1/2	45	39 1/4	50	12 1/2	83 3/8	32 3/8	40 1/4	12 1/2	18 1/2	8 1/2	6 1/4	44 1/8	5 1/8	5 1/8	28	38 3/8
375	mm	902	1144	997	1270	318	2118	823	1023	318	470	216	159	1121	131	131	712	975

STANDARD WATTAGE

		208V			240V			415V			480V		
			AMPS	AMPS		AMPS	AMPS		AMPS	AMPS		AMPS	AMPS
GALS.	LITERS	KW	1PH	3PH	KW	1PH	3PH	KW	1PH	3PH	KW	1 PH	3PH
25	100	9.8	47.2	27.2	13.1	54.4	31.4	12.1	29.0	16.7	13.1	27.2	15.7
30	115	12.3	59.0	34.1	16.3	68.1	39.3	15.1	36.2	20.9	16.3	34.0	19.6
40	150	14.7	70.8	40.9	19.6	81.7	47.1	18.1	43.5	25.1	19.6	40.8	23.6
60	225	14.7	70.8	40.9	19.6	81.7	47.1	18.1	43.5	25.1	19.6	40.8	23.6
80	300	14.7	70.8	40.9	19.6	81.7	47.1	18.1	43.5	25.1	19.6	40.8	23.6
100	375	14.7	70.8	40.9	19.6	81.7	47.1	18.1	43.5	25.1	19.6	40.8	23.6

HIGH WATTAGE

		208V			240V			415V			480V		
			AMPS	AMPS		AMPS	AMPS		AMPS	AMPS		AMPS	AMPS
GALS.	LITERS	KW	1PH	3PH	KW	1PH	3PH	KW	1PH	3PH	KW	1 PH	3PH
25	100	14.7	70.8	40.9	19.6	81.7	47.1	18.1	43.5	25.1	19.6	40.8	23.6
30	115	19.6	NA	54.5	26.1	NA	62.9	24.1	58.0	33.5	26.1	54.4	31.4
40	150	24.5	NA	68.1	32.7	NA	78.6	30.1	72.5	41.8	32.7	68.1	39.3
60	225	29.4	NA	81.7	39.2	NA	94.3	36.2	87.0	50.2	39.2	81.7	47.1
80	300	29.4	NA	81.7	39.2	NA	94.3	36.2	87.0	50.2	39.2	81.7	47.1
100	375	29.4	NA	81.7	39.2	NA	94.3	36.2	87.0	50.2	39.2	81.7	47.1

Consult factory for other voltages.

- CAPACITIES:
  (in 8 oz. servings, other sizes may be calculated)
  25 Gallon / 100 liters .....400 servings
  30 Gallon / 110 liters.....480 servings
  40 Gallon / 150 liters .....640 servings
  60 Gallon / 225 liters .....960 servings
  80 Gallon / 300 liters .....1280 servings
  100 Gallon / 375 liters .....1600 servings

WATER (H)(C)

⅜" O.D. copper tube or ½" N.P.T. pipe.

When ordered with optional faucet.

CLEARANCE

RIGHT = 0
LEFT = 0
REAR = 0

Allow 12" minimum on right side for servicing.

Shipping Weights & Dimensions

Model -
KEL-25 Weight - 240 lbs
Width - 38"
Depth - 38"
Height - 54"
KEL-30 Weight - 283 lbs
KEL-40 Weight - 296 lbs
Width - 38"
Depth - 38"
Height - 55"
KEL-60 Weight - 280 lbs
Width - 44"
Depth - 44"
Height - 54"
KEL-80 Weight - 411 lbs
KEL-100 Weight - 461 lbs

NOTES:
Cleveland Range reserves right of design improvement or modification, as warranted.
Many regional, state and local codes exist and it is the responsibility of the owner and installer to comply with the codes.
Cleveland Range equipment is built to comply with applicable standards for manufacturers. Included among those approval agencies are U.L/NSF#4 and CSA (AGA, CGA).

(NOT TO SCALE)

Electric Kettles