Kolpak/RDI Refrigeration System Installation & Operation Manual



Welbilt
2915 Tennessee Avenue North
Parsons, TN 38363
Phone: 800-225-9916
www.welbilt.com

550001058-10
April 2017

Table of Contents

Safety Information 3
Receiving Inspection 4
Locating and Mounting Condensing Units 4-6
Locating and Mounting Evaporator Coils 6-7
Wiring 8
Piping 8-13
Leak Test 14-15
Evacuation 15-16
Refrigerant Charging 16
Suction/Liquid Line Sizing Chart 17
Operational Start-Up 18-20
Compressor Superheat 21
Evaporator Superheat 22-23
Thermostat 24-28
Electric Defrost Timer 29
Maintenance 30
Troubleshooting Charts 31-33
ArcticFox Local Area Dashboard & Alarms (LDA): 34
ArcticFox LDA Kit 34
ArcticFox LDA Back Label 35
ArcticFox LDA Side View 35
ModBus Configuration 36-38
Installing The ArcticFox LDA: Option 1 39
Installing The ArcticFox LDA: Option 2 39
Installing The ArcticFox LDA: Option 3 40
Using the ArcticFox Flash Drive For Data Logging The ArcticFox LDA 40
Accessing The Local Dashboard 41-58
Evaporator Troubleshooting 59
Condensing Unit Troubleshooting 60-61
Wiring Diagrams 62-76
- Condensing Unit 208-230/1/60 62
- Condensing Unit 208-230/3/60 63
- Condensing Unit 460/3/60 64
- Condensing Unit Medium Temp (MZ) Scroll 208-230/1/60 65
- Condensing Unit Medium Temp (MZ) Scroll 208-230/3/60 66
- Condensing Unit Low Temp (LZ) Scroll 208-230/1/60 67
- Refrigeration System Low Temp (LZ) Scroll 208-230/1/60 68
- Condensing Unit Low Temp (LZ) Scroll 208-230/3/60 69
- Refrigeration System Low Temp (LZ) Scroll 208-230/3/60 70
- Air Defrost Evaporator 115/1/ 71
- Air Defrost Evaporator 208-230/60/1 72
- Air Defrost with 2 Evaporators 115/1/60 73
- Air Defrost with 2 Evaporators 208-230/60/1 74
- Electric Defrost Evaporator 208-230/1/60 75
- Electric Defrost with 2 Evaporators 208-230/1/60 76

System Start-Up Data Sheet 77-80
Warranty Information 81

General Safety Information

Read this manual carefully before beginning the installation and operation of the refrigeration system. Special attention is required to all sections identified with the following warning and caution notices provided in both English and French languages:

⚠ WARNING

Text in a Warning box alerts you to a potential personal injury situation. Read each Warning statement before proceeding and work carefully.

⚠ AVERTISSEMENT

Le texte qui figure dans les encadrés d'avertissement vous alerte d'une situation pouvant potentiellement causer des blessures. Lire chaque déclaration d'avertissement avant de procéder et travailler prudemment.

⚠ CAUTION

Text in a Caution box alerts you to a situation in which you could damage the refrigeration system. Read each Caution statement before proceeding and work carefully.

⚠ MISE EN GARDE

Le texte qui figure dans les encadrés de mise en garde vous alerte d'une situation dans laquelle le système de réfrigération pourrait subir des dommages. Lire chaque déclaration de mise en garde avant de procéder et travailler prudemment.

Disregarding these special notices may result in personal injury and/or damage to the refrigeration system.

Safety Notices:

- Installation and maintenance/servicing are to be performed only by trained and qualified personnel familiar with commercial refrigeration systems.
- Ensure that all field wiring conforms to the equipment requirements and all applicable local and national codes.
- Disconnect all power sources before servicing the refrigeration equipment.
- Sheet metal and coil surfaces have sharp edges. Use appropriate protective gloves to prevent injury.
- Use appropriate eye protection during installation and servicing.

Receiving Inspection

Check the shipment carefully and compare to the bill of lading. Account for all items listed and inspect each container for damage. Carefully inspect for any concealed damage. Report any shortages or damages to the carrier, note on the bill of lading, and file a freight claim.

Damaged material cannot be returned to the manufacturer without prior approval. A Return Material Authorization (RMA) must be obtained. Contact a sales representative at 800-826-7036.

Locating and Mounting Condensing Unit

General Guidelines:

- Check the selected installation location to ensure that racks, braces, flooring, foundations, etc. are adequate to support the condensing unit weight.
- The installation location is clean, dry, and level.
- Locate away from corrosive and noise sensitive atmospheres.
- Use the condensing unit skid and base when moving the unit. Do not remove unit from skid until the unit is moved to the mounting location.
- Mount the condensing unit base to pads or structural rails using properly sized bolts through the unit base. Center of condensing unit needs to be properly supported.

General Guidelines - Condensing Unit Locating and Mounting (continued):



Correct



Incorrect

⚠ WARNING

Do not lift the condensing unit by the refrigerant tubing or components. These features will not support the condensing unit weight. Injury and unit damage may occur!

⚠ AVERTISSEMENT

Ne pas soulever le groupe compresseur-condenseur par les tubes ou les composants du réfrigérant. Ces éléments ne supporteront pas le poids du groupe compresseur-condenseur. Cela pourrait entraîner des blessures et des dommages à l'appareil!

Clearance Requirements:

- Locate where there is a sufficient and unrestricted supply of clean ambient air.
- Locate where this is adequate space for the removal of the heated discharged air from the condensing unit area.
- Do not position multiple units so that discharge air from one unit is blowing into the condenser inlet air of the other unit.
- All sides of the unit should be positioned a minimum distance equal to the total width of the condensing unit away from any other unit, wall, or obstruction.

Clearance Requirements (continued):

Example of Multiple Units with Horizontal Airflow

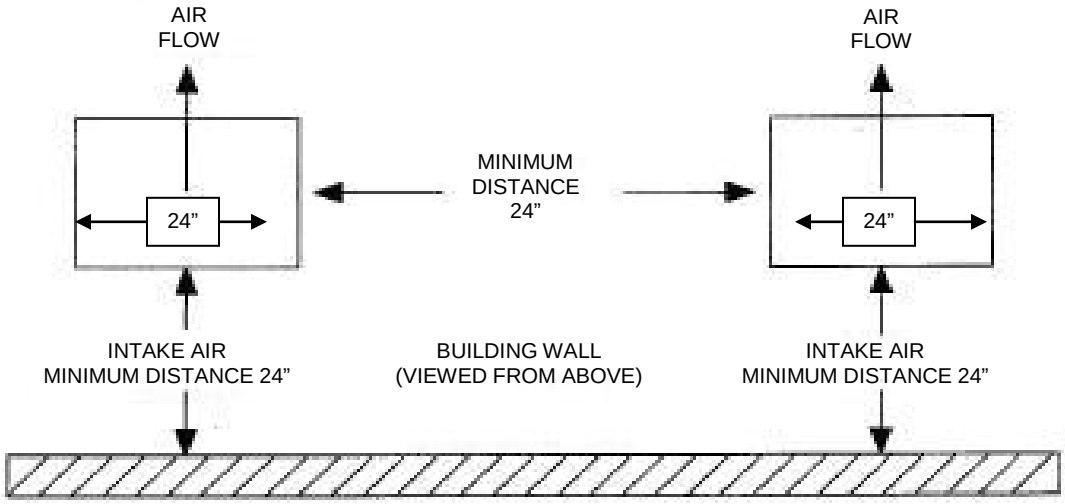

⚠CAUTION

Failure to observe clearance and air flow requirements will result in poor system performance and premature equipment failure!

⚠MISE EN GARDE

Le non-respect des exigences de dégagement et de circulation d’air aura pour résultat un rendement médiocre du système et une défaillance prématurée de l’équipement!

Locating and Mounting Evaporator Coil

General Guidelines:

- Do not place the evaporator above or close to door openings. This will help prevent potential icing problems.
- Allow a minimum clearance equal to or greater than the coil height on all sides of the coil for proper air flow and service access.
- Use the evaporator coil for a template to locate and drill the mounting holes (1/2” diameter).
- Place a 1” and a 1-5/8” washer on each nylon bolt and insert through the drilled mounting holes in the ceiling from the exterior of the walk-in ceiling panel.

General Guidelines - Locating and Mounting Evaporator Coil (continued):

NOTE: Nylon bolts are supplied to prevent thermal transfer between the exterior of the walk-in and the interior of the walk-in. Do not use metal bolts.

- Lift the evaporator coil until the nylon bolts extend through the mounting brackets.
- Install washers and secure with nuts. Tighten until the coil is firm against the ceiling. The evaporator coil must be level.
- Additional information is available in the installation manual supplied with the evaporator.

⚠CAUTION

Failure to observe clearance and air flow requirements will result in poor system performance and premature equipment failure!

⚠MISE EN GARDE

Le non-respect des exigences de dégagement et de circulation d'air aura pour résultat un rendement médiocre du système et une défaillance prématurée de l'équipement!

Evaporator Coil Mounting Diagram

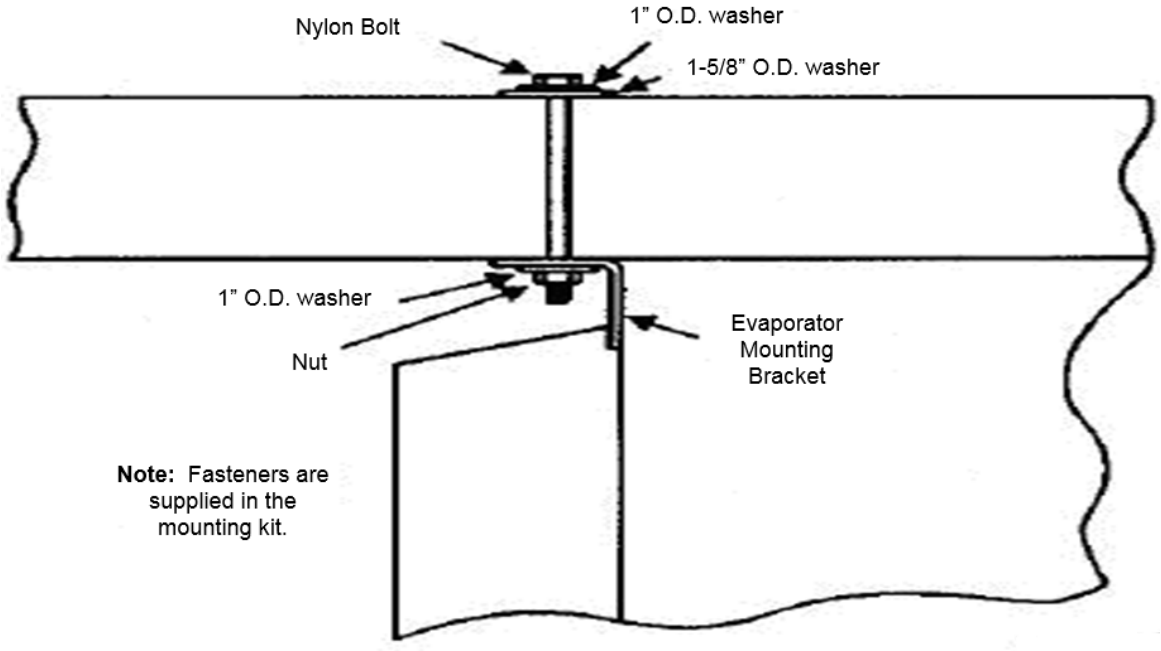

Wiring

All electrical connections and routing must comply with local and national codes. Do not modify the factory installed wiring without written factory approval. The field wiring must enter through the knockouts provided. Refer to the nameplate on the condensing or evaporator coil to determine the proper electrical power supply. Wire type should be of copper conductor only and properly sized to handle the electrical load. The unit and coil must be properly grounded. Condensing unit wiring diagrams are located inside this installation manual and attached inside the electrical box cover. Evaporator coil wiring diagrams are located inside this installation manual and inside the evaporator cover.

⚠ WARNING

All wiring must comply with local and national codes. Wiring must be performed only by a refrigeration technician or certified electrician. Failure to follow these guidelines may result in injury!

⚠ AVERTISSEMENT

Tout le câblage doit être conforme aux codes locaux et nationaux. Le câblage ne doit être effectué que par un technicien en réfrigération ou un électricien agréé. Le non-respect de ces consignes peut entraîner des blessures!

⚠ CAUTION

Check all wiring connections, including factory terminals, before operation. Connections can become loose during shipment and installation.

⚠ MISE EN GARDE

Vérifier toutes les connexions de câblage, y compris les bornes installées en usine, avant de faire fonctionner l'appareil. Les connexions peuvent devenir lâches pendant l'expédition et l'installation.

Piping

General Requirements:

All refrigeration piping and components are to be installed in accordance with applicable local and national codes and in conformance with industry refrigeration guidelines to ensure proper operation of the refrigeration system. Only refrigeration grade copper tubing should be used. Long radius elbows should be used. Short radius elbows have points of excessive stress concentration and are subject to breaking at these points, do not use short radius elbows. Suction lines must be insulated with a minimum ¾" thick insulation tubing to reduce heat pick-up.

Cleanliness:

Condensing units and evaporator coils are cleaned and dehydrated at the factory. The condensing unit must remain closed and pressurized until the piping is complete and final connections are ready to be made.

⚠CAUTION

The maximum air exposure for dehydrated condensing units is 15 minutes. Systems exposed longer than 15 minutes must have the compressor oil and drier filter replaced. Leaving a system exposed to the atmosphere for more than 15 minutes can result in premature system failure.

⚠MISE EN GARDE

L'exposition maximale à l'air des groupes compresseurs-condenseurs déshydratés est de 15 minutes. L'huile du compresseur et le filtre du dessiccateur doivent être remplacés sur les systèmes qui ont été exposés à l'air pendant plus de 15 minutes. L'exposition d'un système à l'atmosphère pendant plus de 15 minutes peut avoir pour résultat une défaillance prématurée du système.

Do not remove base mount valve covers until work is ready to be performed. Ensure that all refrigeration tubing is clean and dry prior to installation. Use only tubing cutters when trimming tubing to the proper length. Do not use saws to cut tubing.

⚠CAUTION

The use of saws to cut tubing can contaminate the system with copper chips causing premature system failure.

⚠MISE EN GARDE

L'utilisation de scies pour couper le tubage peut contaminer le système par des copeaux de cuivre et causer une défaillance prématurée du système.

Brazing joints require a dry inert gas, typically nitrogen, be passed through the lines at a low pressure to prevent scaling and oxidation. Use only silver solder brazing alloys. Minimize the amount of flux to prevent internal contamination. Flux only the male portion of the joint. Thoroughly clean fluxed joints after brazing.

⚠CAUTION

Dry inert gas must be passed through the system while brazing to prevent scaling and oxidation. Scaling and oxides can clog refrigeration components resulting in system failure.

⚠MISE EN GARDE

Le gaz sec inerte doit passer par le système pendant le brasage afin de prévenir l'entartrage et l'oxydation. Le tartre et les oxydes peuvent bloquer les éléments de réfrigération et causer une défaillance du système.

Pipe Supports:

All tubing should be supported in a least two locations (near the end of each tubing run). Long runs will require additional support. As a guide, support 3/8" to 7/8" pipe every five feet, 1-1/8" to 1-3/8" every seven feet, and 1-5/8" to 2-1/8" every ten feet. Do not leave a corner unsupported when changing directions. Place supports within 2 feet of each direction change. Piping that is attached to a vibrating object (such as a compressor or compressor base) must be supported in a manner that will not restrict the movement of the vibrating object. Rigid mounting will fatigue the tubing causing refrigerant leaks.

Oil Traps:

To ensure proper oil return to the compressor, a P-type oil trap should be installed at the base of each suction riser of four feet or more. The suction trap must be the same size as the suction line. Additional traps are necessary for long vertical risers. Add a trap for each length of pipe (approximately 20 feet) to insure proper oil return. Suction lines must slope ¼" per 10 feet toward the compressor. Install a suction line trap at the evaporator outlet if the suction line rises to a point higher than the connection on the evaporator.

⚠CAUTION

Failure to properly install oil traps can prevent sufficient oil return to the compressor resulting in premature compressor failure.

⚠MISE EN GARDE

L'installation incorrecte des siphons d'huile peut empêcher un retour d'huile suffisant au compresseur, entraînant une défaillance prématurée du compresseur.

Pressure Regulating-Relief Valves:

⚠ WARNING

Do not defeat, cap, add piping to the outlet of the valve, or, attempt to change the relief setting.

⚠ AVERTISSEMENT

Ne pas annuler, mettre un capuchon, ajouter de la tuyauterie à la prise de la valve ou tenter de modifier le réglage de décharge.

Drain Lines:

Evaporator coil drain lines should be pitched a minimum of 1/2" per foot to allow proper drainage and exit the walk-in as quickly as possible. Insulate and seal the drain line where it passes through the wall. Copper drain line is required. Freezer compartment drain lines must have heat tape wrapped around the copper drain line and must have ¾" thick insulation tubing. Do not locate drain line P-traps within the freezer space. Do not reduce the drain line size. Locate a drain line P-trap outside of the cooler space. Any outdoor P-traps exposed to low ambient temperatures should be wrapped with a drain line heater (provide 20 watts of heat per foot of drain line at 0°F, 30 watts per foot at -20°F. Freezer/cooler combo boxes can have one common drain line. However, there must be a P-trap located between the freezer evaporator and the cooler evaporator located inside the cooler compartment. The cooler compartment P-trap should be located between the cooler evaporator and the external drain location.

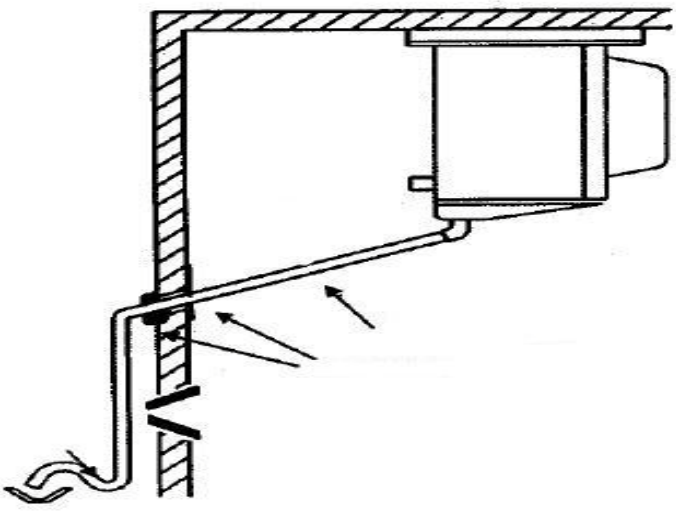

Pre-Charged lines and Quick Connects:

Route the suction and liquid line sets between the condensing unit and evaporator coil following the piping guidelines identified in this manual. Remove the dust caps from the quick connect fittings and verify that the o-rings are intact. Wipe the coupling seals and threaded surfaces with a clean cloth to prevent contamination. Lubricate the threads and o-rings with Polyol Ester oil. Thread the coupling halves together by hand to ensure proper thread mating. Tighten with a wrench until the coupling bodies "bottom" or until there is definite resistance. Tighten an additional ¼ turn to ensure proper brass-to-brass seating. Once the system is opened and pressurized, check each fitting for refrigerant leaks. If a leak is detected, tighten until the leak stops.

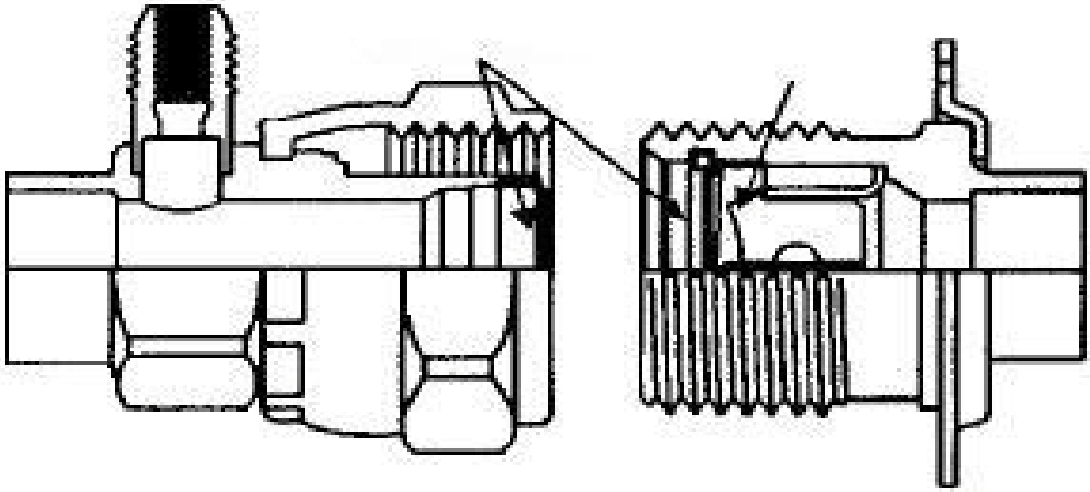



INCORRECT CORRECT

⚠ WARNING

Do not loosen and disconnect the quick connect fittings before reclaiming the refrigerant and depressurizing the system. Disconnecting a pressurized system can result in injury!

Pre-Charged lines and Quick Connects (continued):

⚠ AVERTISSEMENT

Ne pas desserrer et désaccoupler les raccords rapides avant de récupérer le réfrigérant et de dépressuriser le système. La déconnexion d'un système sous pression peut entraîner des blessures!

⚠ CAUTION

Quick connects are for one time use only. Once disconnected, the coupling cannot be re-used. Refrigerant leaks will occur if the couplings are re-used resulting in poor system performance.

⚠ MISE EN GARDE

Les raccords rapides ne sont prévus que pour un seul usage. Une fois désaccouplés, ils ne peuvent plus être utilisés de nouveau. Des pertes de réfrigérant se produiront si les raccords sont réutilisés, ayant pour résultat un rendement médiocre du système.

Excess line set length should never be allowed to coil in the vertical position. Excess line length should be laid flat on its side.



INCORRECT



CORRECT

Leak Testing

After all connections are complete the refrigeration system must be tested for leaks. Failure to perform a leak test can result in unsatisfactory system performance, additional servicing and service costs, and possible system failure. Leak test should be performed using an electronic leak detector. All joints and components, both factory and field installed, should be thoroughly inspected for leaks. The system installation must be leak free!

Leak Testing "PR" model systems:

- Open both the liquid and suction service valves.
- Ensure the solenoid valve is energized and open.
- Add 50 psi refrigerant, then pressurize with dry nitrogen to the low side test pressure identified on the unit rating label.
- Allow thirty minutes for refrigerant to reach all parts of the system.
- Check all joints and components with an electronic leak detector.

Leak Testing "PC" model systems:

- Leave the service valves closed, the condensing unit is charged with refrigerant.
- Ensure the solenoid valve is energized and open.
- Add 50 psi refrigerant, then pressurize with dry nitrogen to the low side test pressure identified on the unit rating label.
- Allow thirty minutes for refrigerant to reach all parts of the system.
- Check all joints and components with an electronic leak detector.

Leak Testing "PCL" model systems:

- Open both the liquid and suction service valves.
- Ensure the solenoid valve is energized and open.
- Allow thirty minutes for refrigerant to reach all parts of the system.
- Check all joints and components with an electronic leak detector.

If a leak is detected, relieve the pressure and/or reclaim the refrigerant and repair the leak. If additional brazing is required, pass a dry inert gas (nitrogen) through the system to prevent contamination. Reference page 12 of this manual for leaks located at quick connects couplings. Retest the system as outlined above until no leaks are detected.

NOTE: R448 refrigerant is a blend and when leaks occur, it is unknown which refrigerant blend or how much of it has escaped. If R448 refrigerant is simply "topped off", the new blend mixture may affect proper performance of the system.

⚠CAUTION

If a braze joint is detected leaking, dry inert gas must be passed through the system while repairing the joint to prevent scaling and oxidation. Scaling and oxides can clog refrigeration components resulting in system failure.

⚠MISE EN GARDE

Si une fuite d'un joint de brasage a été détectée, le gaz inerte doit passer par le système lors de la réparation du joint afin de prévenir l'entartrage et l'oxydation du système. Le tartre et les oxydes peuvent bloquer les éléments de réfrigération et causer une défaillance du système.

⚠CAUTION

Always use the system specified refrigerant when pressuring to perform a leak test.

⚠MISE EN GARDE

Utiliser toujours le réfrigérant du système précisé lors de la mise sous pression dans le but de réaliser un essai de fuite.

System Evacuation

Evacuation of the refrigeration system is necessary to remove all air and moisture from the system. A reliable rotary vacuum pump with an accurate deep vacuum gauge is recommended. Do not use the system compressor as a vacuum pump and do not operate the compressor while the system is under vacuum.

Evacuation of "PR" model systems:

- Open both the liquid and suction service valves.
- Ensure the solenoid valve is energized and open.
- Connect vacuum pump to the liquid and suction service valves located on the condensing unit.
- Evacuate the system to 250 microns and maintain for a minimum of 4 hours.
- Perform a vacuum decay test for a minimum of ten minutes to ensure the system is leak free and dry.

Evacuation of "PC" model systems:

- Leave the service valves closed, the condensing unit has been evacuated and is charged with refrigerant.
- Ensure the solenoid valve is energized and open.
- Connect vacuum pump to the liquid and suction service valves. located on the condensing unit.
- Evacuate the system to 250 microns and maintain for a minimum of 4 hours.
- Perform a vacuum decay test for a minimum of ten minutes to ensure the system is leak free and dry.

Evacuation of "PCL" model systems:

- "PCL" systems do not require evacuation.

⚠CAUTION

Do not use the system compressor to evacuate the system. Do not start the compressor while the system is under vacuum. This may damage to the compressor and cause premature system failure.

⚠MISE EN GARDE

Ne pas utiliser le compresseur du système pour vidanger celui-ci Ne pas démarrer le compresseur pendant que le système est sous vide. Cela peut endommager le compresseur et causer une défaillance prématurée du système.

Refrigerant Charging

- The refrigerant charge should be added to the system through the liquid line service valve located on the condensing unit. Do not charge liquid refrigerant into the suction service valve! The initial charge should be determined by weight and sight glass indication. Start the system. If the condensing temperature is 105° F or greater, charge the system until the sight glass clears. If the condensing unit temperature is below 105° F, reduce the condenser face surface area to raise the discharge pressures above 105° F and to charge to a clear sight glass. Return to a full condenser face area when charging is complete.

NOTE: PC & PCL refrigerant charge amounts are based on average ambient operating temperatures across the United States. Any refrigerant amount added or removed based on ambient operating temperatures is considered part of normal maintenance and is not covered under warranty.

⚠CAUTION

Do not charge liquid refrigerant into the suction service valve located on the condensing unit. Do not overcharge the system. These conditions can permit liquid refrigerant to enter the compressor and cause damage to internal components resulting in premature system failure.

⚠MISE EN GARDE

Ne pas charger le réfrigérant liquide dans le robinet d'aspiration de service. Ne pas surcharger le système. Ces conditions peuvent permettre au réfrigérant d'entrer dans le compresseur et de causer des dommages aux composants internes, entraînant une défaillance prématurée du système.

Capacity BTUH	Suction Line Size																						Liquid Line Size			
	Suction Temperature																						Receiver to Expansion Valve Equivalent Lengths			
	+20°F Equivalent Lengths				+10°F Equivalent Lengths				-10°F Equivalent Lengths				-20°F Equivalent Lengths				-30°F Equivalent Lengths				-40°F Equivalent Lengths							
	25'	50'	100'	150'	25'	50'	100'	150'	25'	50'	100'	150'	25'	50'	100'	150'	25'	50'	100'	150'	25'	50'	100'	150'	25'	50'	100'	150'
1,000	3/8	3/8	3/8	3/8	3/8	3/8	3/8	3/8	3/8	3/8	1/2	1/2	3/8	3/8	1/2	1/2	3/8	3/8	1/2	1/2	3/8	1/2	1/2	5/8	3/8	3/8	3/8	3/8
3,000	3/8	3/8	1/2	1/2	3/8	1/2	1/2	5/8	1/2	1/2	5/8	5/8	1/2	1/2	5/8	7/8	1/2	1/2	5/8	7/8	1/2	1/2	5/8	7/8	3/8	3/8	3/8	3/8
4,000	3/8	1/2	1/2	5/8	1/2	1/2	5/8	5/8	1/2	5/8	5/8	7/8	1/2	5/8	7/8	7/8	5/8	5/8	7/8	7/8	1/2	5/8	7/8	7/8	3/8	3/8	3/8	3/8
6,000	1/2	1/2	5/8	7/8	1/2	1/2	5/8	7/8	1/2	5/8	7/8	7/8	5/8	5/8	7/8	7/8	5/8	5/8	7/8	7/8	5/8	5/8	7/8	7/8	3/8	3/8	3/8	3/8
9,000	5/8	5/8	7/8	7/8	5/8	5/8	7/8	7/8	5/8	7/8	7/8	7/8	5/8	7/8	7/8	1-1/8	5/8	7/8	7/8	1-1/8	5/8	7/8	7/8	1-1/8	3/8	3/8	3/8	3/8
12,000	5/8	7/8	7/8	7/8	5/8	7/8	7/8	7/8	7/8	7/8	7/8	1-1/8	7/8	7/8	1-1/8	1-1/8	7/8	7/8	1-1/8	1-1/8	7/8	7/8	1-1/8	1-1/8	3/8	3/8	3/8	3/8
15,000	5/8	7/8	7/8	7/8	7/8	7/8	7/8	1-1/8	7/8	7/8	1-1/8	1-1/8	7/8	7/8	1-1/8	1-1/8	7/8	7/8	1-1/8	1-1/8	7/8	7/8	1-1/8	1-1/8	3/8	3/8	3/8	1/2
18,000	7/8	7/8	7/8	1-1/8	7/8	7/8	1-1/8	1-1/8	7/8	7/8	1-1/8	1-1/8	7/8	1-1/8	1-1/8	1-3/8	7/8	1-1/8	1-1/8	1-3/8	7/8	1-1/8	1-1/8	1-3/8	3/8	3/8	1/2	1/2
24,000	7/8	7/8	1-1/8	1-1/8	7/8	1-1/8	1-1/8	1-1/8	7/8	1-1/8	1-1/8	1-3/8	1-1/8	1-1/8	1-3/8	1-3/8	1-1/8	1-1/8	1-3/8	1-3/8	1-1/8	1-1/8	1-3/8	1-3/8	3/8	3/8	1/2	1/2
30,000	7/8	7/8	1-1/8	1-1/8	7/8	1-1/8	1-1/8	1-3/8	1-1/8	1-1/8	1-3/8	1-3/8	1-1/8	1-1/8	1-3/8	1-3/8	1-1/8	1-1/8	1-3/8	1-3/8	1-1/8	1-1/8	1-3/8	1-3/8	3/8	1/2	1/2	1/2
36,000	7/8	1-1/8	1-1/8	1-3/8	1-1/8	1-1/8	1-3/8	1-3/8	1-1/8	1-1/8	1-3/8	1-3/8	1-1/8	1-1/8	1-3/8	1-3/8	1-1/8	1-3/8	1-3/8	1-3/8	1-1/8	1-3/8	1-3/8	1-5/8	1/2	1/2	1/2	1/2
42,000	1-1/8	1-1/8	1-3/8	1-3/8	1-1/8	1-1/8	1-3/8	1-3/8	1-1/8	1-3/8	1-3/8	1-5/8	1-1/8	1-3/8	1-5/8	1-5/8	1-1/8	1-3/8	1-3/8	1-5/8	1-1/8	1-3/8	1-3/8	1-5/8	1/2	1/2	1/2	5/8
48,000	1-1/8	1-1/8	1-3/8	1-3/8	1-1/8	1-1/8	1-3/8	1-5/8	1-1/8	1-3/8	1-3/8	1-5/8	1-1/8	1-3/8	1-5/8	1-5/8	1-1/8	1-3/8	1-3/8	1-5/8	1-1/8	1-3/8	1-3/8	1-5/8	1/2	1/2	5/8	5/8
54,000	1-1/8	1-1/8	1-3/8	1-3/8	1-1/8	1-3/8	1-3/8	1-5/8	1-3/8	1-3/8	1-5/8	1-5/8	1-3/8	1-3/8	1-5/8	1-5/8	1-3/8	1-3/8	1-5/8	1-5/8	1-3/8	1-3/8	1-5/8	1-5/8	1/2	1/2	5/8	5/8
60,000	1-1/8	1-1/8	1-3/8	1-5/8	1-1/8	1-3/8	1-5/8	1-5/8	1-3/8	1-3/8	1-5/8	1-5/8	1-3/8	1-3/8	1-5/8	1-5/8	1-3/8	1-3/8	1-5/8	1-5/8	1-3/8	1-3/8	1-5/8	1-5/8	1/2	1/2	5/8	5/8
66,000	1-1/8	1-3/8	1-3/8	1-5/8	1-1/8	1-3/8	1-5/8	1-5/8	1-3/8	1-5/8	1-5/8	1-5/8	1-3/8	1-5/8	1-5/8	1-5/8	1-3/8	1-5/8	1-5/8	1-5/8	1-3/8	1-5/8	1-5/8	1-5/8	1/2	1/2	5/8	5/8
72,000	1-1/8	1-3/8	1-5/8	1-5/8	1-1/8	1-3/8	1-5/8	1-5/8	1-3/8	1-5/8	1-5/8	1-5/8	1-3/8	1-5/8	1-5/8	1-5/8	1-3/8	1-5/8	1-5/8	1-5/8	1-3/8	1-5/8	1-5/8	1-5/8	1/2	5/8	5/8	5/8
78,000	1-1/8	1-3/8	1-5/8	1-5/8	1-3/8	1-3/8	1-5/8	1-5/8	1-3/8	1-5/8	1-5/8	1-5/8	1-5/8	1-5/8	1-5/8	2-1/8	1-5/8	1-5/8	1-5/8	2-1/8	1-5/8	1-5/8	1-5/8	2-1/8	5/8	5/8	5/8	5/8
84,000	1-1/8	1-3/8	1-5/8	1-5/8	1-3/8	1-3/8	1-5/8	2-1/8	1-3/8	1-5/8	1-5/8	2-1/8	1-5/8	1-5/8	2-1/8	2-1/8	1-5/8	1-5/8	2-1/8	2-1/8	1-5/8	1-5/8	2-1/8	2-1/8	5/8	5/8	5/8	7/8
90,000	1-3/8	1-3/8	1-5/8	2-1/8	1-3/8	1-5/8	1-5/8	2-1/8	1-5/8	1-5/8	2-1/8	2-1/8	1-5/8	1-5/8	2-1/8	2-1/8	1-5/8	2-1/8	2-1/8	2-1/8	1-5/8	1-5/8	2-1/8	2-1/8	5/8	5/8	7/8	7/8
120,000	1-3/8	1-5/8	2-1/8	2-1/8	1-3/8	1-5/8	2-1/8	2-1/8	1-5/8	2-1/8	2-1/8	2-5/8	1-5/8	2-1/8	2-1/8	2-5/8	1-5/8	2-1/8	2-1/8	2-5/8	1-5/8	2-1/8	2-1/8	2-5/8	5/8	5/8	7/8	7/8
150,000	1-5/8	1-5/8	2-1/8	2-1/8	1-5/8	2-1/8	2-1/8	2-1/8	2-1/8	2-1/8	2-5/8	2-5/8	2-1/8	2-1/8	2-5/8	2-5/8	2-1/8	2-1/8	2-5/8	2-5/8	2-1/8	2-1/8	2-5/8	2-5/8	5/8	7/8	7/8	7/8
180,000	1-5/8	2-1/8	2-1/8	2-1/8	1-5/8	2-1/8	2-1/8	2-5/8	2-1/8	2-1/8	2-5/8	2-5/8	2-1/8	2-1/8	2-5/8	2-5/8	2-1/8	2-1/8	2-5/8	2-5/8	2-1/8	2-1/8	2-5/8	2-5/8	7/8	7/8	7/8	1-1/8
210,000	1-5/8	2-1/8	2-1/8	2-5/8	2-1/8	2-1/8	2-5/8	2-5/8	2-1/8	2-1/8	2-5/8	3-1/8	2-1/8	2-5/8	2-5/8	3-1/8	2-1/8	2-5/8	2-5/8	3-1/8	2-1/8	2-5/8	2-5/8	3-1/8	7/8	7/8	1-1/8	1-1/8
240,000	1-5/8	2-1/8	2-1/8	2-5/8	2-1/8	2-1/8	2-5/8	2-5/8	2-1/8	2-5/8	2-5/8	3-1/8	2-1/8	2-5/8	2-5/8	3-1/8	2-5/8	2-5/8	3-1/8	3-1/8	2-5/8	2-5/8	3-1/8	3-1/8	7/8	7/8	1-1/8	1-1/8
300,000	2-1/8	2-1/8	2-5/8	2-5/8	2-1/8	2-5/8	2-5/8	3-1/8	2-5/8	2-5/8	3-1/8	3-1/8	2-5/8	2-5/8	3-1/8	3-5/8	2-5/8	2-5/8	3-1/8	3-5/8	2-5/8	2-5/8	3-5/8	3-5/8	7/8	1-1/8	1-1/8	1-3/8
360,000	2-1/8	2-1/8	2-5/8	3-1/8	2-1/8	2-5/8	2-5/8	3-1/8	2-5/8	2-5/8	3-1/8	3-5/8	2-5/8	2-5/8	3-5/8	3-5/8	2-5/8	3-1/8	3-5/8	3-5/8	2-5/8	3-1/8	3-5/8	4-1/8	1-1/8	1-1/8	1-3/8	1-3/8
480,000	2-1/8	2-5/8	3-1/8	3-1/8	2-5/8	2-5/8	2-5/8	3-5/8	2-5/8	3-1/8	3-5/8	3-5/8	2-5/8	3-1/8	3-5/8	3-5/8	3-1/8	3-5/8	4-1/8	4-1/8	3-1/8	3-5/8	4-1/8	4-1/8	1-1/8	1-1/8	1-3/8	1-5/8
600,000	2-5/8	2-5/8	3-1/8	3-5/8	2-5/8	2-5/8	3-1/8	3-5/8	3-1/8	3-1/8	3-5/8	4-1/8	3-1/8	3-1/8	3-5/8	3-5/8	3-1/8	3-5/8	4-1/8	4-1/8	3-1/8	3-5/8	4-1/8	4-1/8	1-1/8	1-3/8	1-5/8	1-5/8

* **NOTES:**

1. Sizes that are highlighted indicate maximum suction line sizes that should be used for risers. Riser size should not exceed horizontal size. Properly placed suction traps must also be used for adequate oil return. All sizes shown are for O.D. Type L copper tubing.
2. Suction line sizes selected at pressure drop equivalent to 2°F. Reduce estimate of system capacity accordingly.
3. Recommended liquid line size may increase with reverse cycle hot gas systems.
4. If system load drops below 40% of design, consideration to installing double suction risers should be made.

Operational Start-Up

The first 2 – 4 hours of operation after initial start-up is a critical time. Do not just start the system and leave. Pressure values, compressor and evaporator superheat, and inspecting for excessive vibrations and loose connections are some of checks that must be performed prior to leaving the system.

Pre-Start Checks:

- Verify that all service valves are fully open.
- Ensure that all refrigerant and electrical connections are tight.
- Verify that the wiring and piping is properly routed and secured.
- The compressor mounting bolts are properly adjusted (see compressor mounts on page 18).
- All fan motors and mounting brackets are tight.
- The condensing unit base and evaporator coil are properly secured.

Compressor Mounts:

Hermetic Compressors – hermetic compressor springs are mounted internally; check the compressor mounting bolts to ensure the nuts have not become loose during shipment.

Semi-Hermetic Compressors – most semi-hermetic compressors have external spring mounts and are factory assembled. The following actions are required once the condensing unit is installed and before system start-up:

- Loosen the upper mounting nuts.
- Remove the spring steel clips from the mounting springs.
- Retighten the upper mounting nuts until the compressor can float on the springs approximately 1/16” between the mounting nut and rubber grommet.

Compressor Mounts (continued):

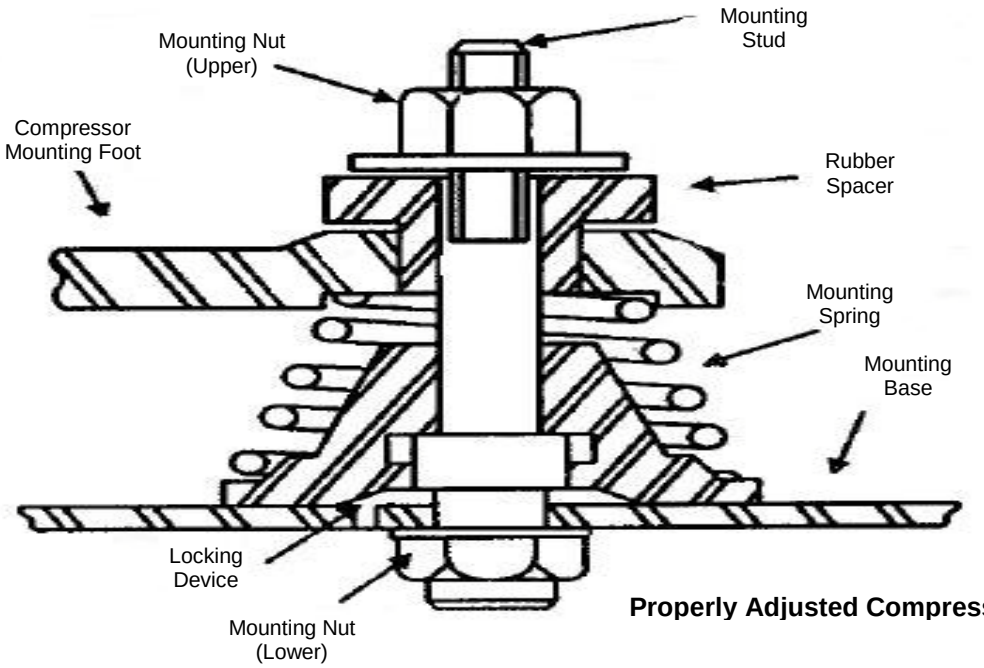

Properly Adjusted Compressor Mount

⚠CAUTION

Failure to ensure the compressor mounts are properly tightened can result in fatigue to the system piping causing leaks and poor system performance.

⚠MISE EN GARDE

Des fixations de montage du compresseur qui ne sont pas serrées adéquatement peuvent entraîner une fatigue de la tuyauterie du système se traduisant par des fuites et un rendement médiocre.

Start-Up Procedure:

⚠CAUTION

Do not start the system while in a vacuum. Do not leave the system unattended until normal operating conditions are achieved.

⚠MISE EN GARDE

Ne pas démarrer le système lorsqu'il est sous vide. Ne pas laisser le système sans surveillance jusqu'à ce que des conditions normales de fonctionnement aient été atteintes.

Start-Up Procedure (continued):

Operate the system for a minimum of two hours and perform checks of the following:

- Check the compressor discharge and suction pressures to ensure they are in the normal operating range.
- Check the liquid line sight glass for proper refrigerant charge (based off of 105ºF condenser coil).

Monitor the compressor oil level (semi-hermetic compressors), add oil as necessary to keep the level at ¾ sight glass when idle and ½ sight glass when running.

- Check the voltage and amperage at the compressor terminals. Voltage must be within +10% or -5% of the rating indicted on the condensing unit name plate. On three phase compressors, verify there is a balanced load.
- Check all fans on the evaporator coil and condensing unit to be sure they are operational and turning in the correct direction.
- Check the piping and electrical connections for vibration. Add supports and strapping if needed.
- Check the crankcase heater operation (if equipped).
- Set the defrost control time and verify the defrost initiation settings. See pages 28-30 for additional details.
- Set temperature control to desired temperature range.
- Check the compressor and evaporator superheat (reference pages 21-23).

After all system checks have been checked, properly adjusted, and verified, replace all Schrader caps, service valve caps, electrical box covers, housings, etc. File a copy of this manual for future reference.

⚠CAUTION

Failure to check and properly adjust compressor superheat can result in premature system failure.

⚠MISE EN GARDE

La vérification et le réglage inadéquats de la surchauffe du compresseur peut entraîner une défaillance prématurée du système.

Compressor Superheat:

Compressor superheat is a critical value that must be checked. Check the compressor superheat as follows:

1. Determine the suction pressure at the suction service valve of the compressor.
2. Determine the saturation temperature at the observed suction pressure using refrigeration pressure temperature tables.
3. Measure the suction line temperature 6 -10 inches away from the compressor.
4. Subtract the saturation temperature (step 2) from the measured temperature (step 3). The difference is the superheat of suction gas.

A low suction superheat can cause liquid to return to the compressor. This will cause dilution of the oil and eventual failure of the bearings, rings and valves. A high suction superheat will cause excessive discharge temperatures, which cause a breakdown of the oil. This causes piston ring wear, and piston and cylinder wall damage. System capacity decreases as the suction superheat increases. For maximum system capacity, keep the suction superheat as low as practical. Copeland requires a minimum compressor superheat of 20°F; however, to improve compressor life, 25°F to 40°F is preferred. Adjust the expansion valve at the evaporator when adjustments to the suction superheat are necessary. Refer to “Evaporator Superheat” on the next 2 pages for more information.

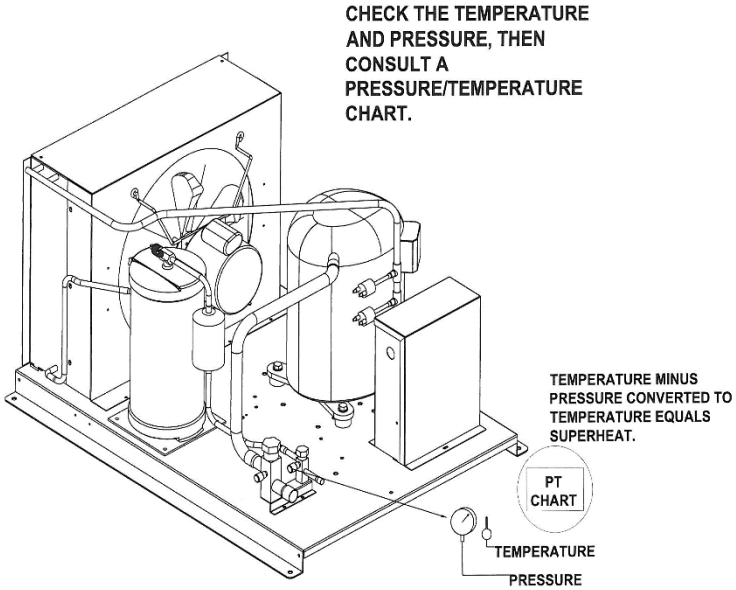

DETERMINING COMPRESSOR SUPERHEAT

Evaporator Superheat:

Check the evaporator superheat once the walk-in has reached the desired temperature. Generally, systems with a design temperature drop of 10°F should have an evaporator superheat value of 6°-10°F on freezers and 8°-12°F on coolers for maximum efficiency.

To determine the evaporator superheat:

1. Measure the suction pressure at the evaporator outlet.
2. Convert the pressure to saturation temperature referencing a temperature-pressure chart.
3. Measure the temperature of the suction line at the expansion valve bulb. Ensure the bulb is mounted at the correct location on the suction tube.
4. Subtract the saturation temperature reading (step 2) from the measured temperature (step 3). The difference is the evaporator superheat.

Determining Evaporator Superheat

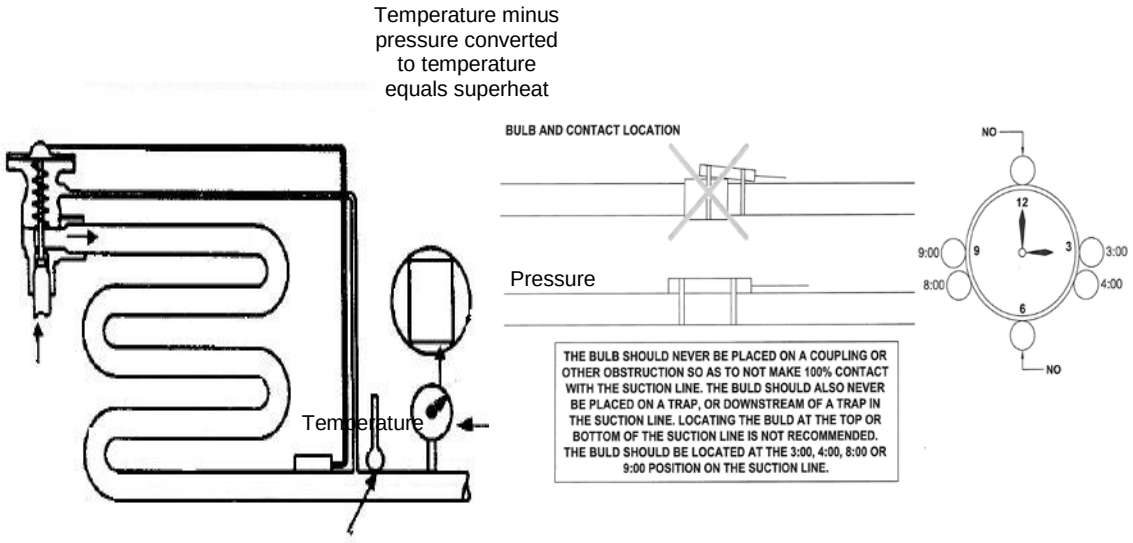

⚠CAUTION

Minimum compressor superheat of 20°F may override these recommendations on systems with short line runs.

⚠MISE EN GARDE

Une surchauffe minimale de 20 °F peut écraser ces recommandations sur les systèmes ayant de courtes conduites.

⚠CAUTION

The condensing unit must have the discharge pressure above the equivalent 105°F condensing pressure (reference refrigerant charging on page 16).

Evaporator Superheat (continued):

⚠MISE EN GARDE

La pression de décharge du groupe compresseur-condenseur doit être supérieure à la pression de condensation équivalente de 105 °F (40,5 °C) (faire référence au chargement du réfrigérant à la page 16).

⚠CAUTION

Correct location and full contact of the expansion valve bulb is extremely important for proper system performance.

⚠MISE EN GARDE

L'emplacement correct et le plein contact du bulbe du détendeur sont extrêmement importants pour assurer un bon rendement du système.

Thermostats

P/N 550005663

Air Defrost Evaporators



P/N 550005664

Electric Defrost Evaporators



P/N 550005663 is used on all Air Defrost model evaporators and features a built in Air Defrost time clock. The default defrost settings are every 6 hours for 30 minutes. See pages 27-28 for default and custom defrost setting instructions.

P/N 550005664 is used on all Electric defrost model evaporators. See page 29 for Electric Defroster Timer setting instructions.

NOTE: The 550005664 display will be blank during the electric defrost cycle.

Thermostats (continued)

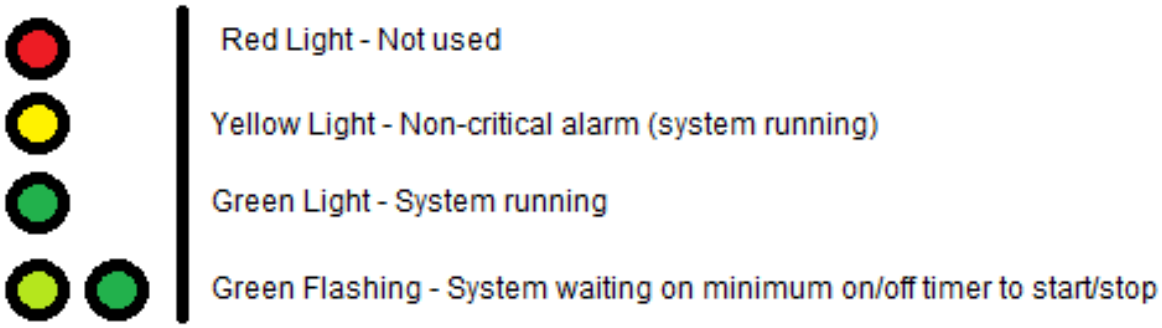

- Access Setpoint mode by pressing and holding the ENTER button until ts (Temperature setpoint) displays on the screen
- Use the ▲ up and ▼ down arrows to scroll through the available setpoints
- Press ENTER to view the current setting
- Use the ▲ up and ▼ down arrows to change the setpoint
- Press and hold the ENTER button to confirm each setpoint change
- Press the BACK button to escape

Thermostats (continued)

Setpoints

tS = Temperature setpoint

diF = Differential

CSH = Maximum compressor starts/stops

dPd = Defrost per day

tod = time of day (only used when custom defrost is selected)

dFt = Defrost time

HAO = High Alarm Offset

LAO = Low Alarm Offset

tAd =Temperature Alarm Delay

Adr = Mod Bus Address

Unt = Ynits for temperature display (FAH or CEL)

Basic Setpoints

Setpoint	Description	Minimum	550005663 Default	550005664 Default	Maximum
tS	Temperature Setpoint	-50°F (-45°C)	35°F	10°F	100°F (38°C)
diF	Differential	1°F	3.5°F	3.5°F	30°F
CSH	Maximum Compressor Starts/Hour	5 (Off)*	0 (off)	0 (off)	10
dPd	Defrost Per Day	0	4	0	12, CUS**
dFt	Defrost Time	0 min	30 min	0 min	720 min
HAO	High Alarm Offset	1°F	10°F	10°F	10°F
LAO	Low Alarm Offset	1°F	5°F	5°F	10°F
tAd	Temp Alarm Delay	1 min	60 min	60 min	180 min
Adr	Mod Bus Address	1	1	1	247
Unt	Units for Temp Display	FAH	FAH	FAH	CEL

*Selecting fewer than 5 compressor starts per hour results in the starts per hour feature being turned off. The compressor will then function on temperature only.
** Selecting CUS (custom) unlocks 12 tod (time of day) defrost setpoints.

Thermostats (continued)

Custom tod (Time of Day) Defrost Setpoints

Setpoint	Description	Minimum	Default	Maximum
tod	Time of Day	0.0	12.0	23.5
d1	Start time of day #1	0.0	dis (disabled)	23,dis (disabled)
d2	Start time of day #2	0.0	dis	23,dis
d3	Start time of day #3	0.0	dis	23,dis
d4	Start time of day #4	0.0	dis	23,dis
d5	Start time of day #5	0.0	dis	23,dis
d6	Start time of day #6	0.0	dis	23,dis
d7	Start time of day #7	0.0	dis	23,dis
d8	Start time of day #8	0.0	dis	23,dis
d9	Start time of day #9	0.0	dis	23,dis
d10	Start time of day #10	0.0	dis	23,dis
d11	Start time of day #11	0.0	dis	23,dis
d12	Start time of day #12	0.0	dis	23,dis

Note: The time of day defrost setting use military time. The first 2 digits are the hour and the 1 digit after the decimal is the minutes.

Thermostats (continued)

Custom Defrost Setup

Custom Defrost Setup
The following steps will guide you through the setup of the custom defrost feature.

Abbreviations:
CUS = custom
d1 = custom defrost 1
diS = disabled
dpd = defrosts per day
ts = temperature setpoint
tod = time of day



STEP 1
Press and hold the ENTER button, **tS** is displayed on the LEDs



STEP 2
Press the ▲ up arrow until **dPd** is displayed,



then press ENTER, 6 (default) will be displayed.



STEP 3
Press the ▲ up arrow until **CUS** is displayed.



Press and hold the ENTER button for 3 seconds until the **dPd** is displayed.



STEP 4
Press the ▲ up arrow until **tod** (time of day) is displayed,



then press ENTER

Use the ▲ up arrow and ▼ down arrow to set the time.

Note: The time is displayed in military time (24-hr clock) The 1st 2 digits are the hour. The minutes are after the decimal. Since there are only 3 digits, the time will be set to the nearest 10 minutes. See examples below.

Examples:
8:10 am would be 8.1 on the controller's display



4:32 pm would be 16.3 on the controller's display.



After the time is set, press and hold the ENTER button for 3 seconds, until **tod** is displayed



STEP 5
Press the ▲ up arrow to display Defrost 1 (**d1**).



To set the first defrost, press ENTER button.

diS (disabled) will be displayed.



Use the ▼ down arrow to set the defrost time.

Note: Defrost times may only be set on the hour.

Example:
2:00 am would be 2



Once the correct time is displayed, press and hold the ENTER button until **d1** is displayed.



STEP 6
Repeat steps as necessary for **d2** to **d12.**





STEP 7
Press the BACK button to save settings, and return to the main screen (room temp will be displayed).

Electric Defrost Timer:

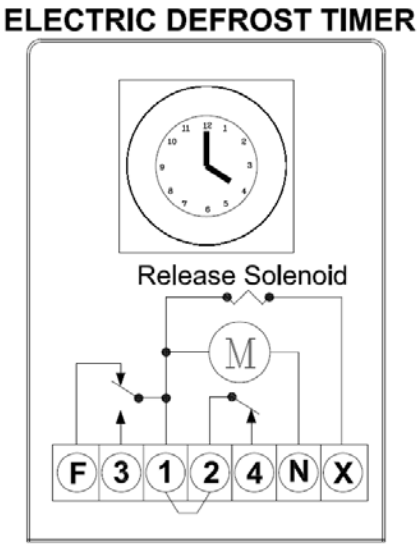

Electric Defrost Time Clock Instructions:

Instructions for setting the timer is located on the inside cover of the time clock. The defrost timer clock must be set to the correct time at initial start-up and after any power interruptions. Set the clock by rotating the clock face until the correct time is at the arrow on the face of the timer. The switch is programmed by pushing the captive trippers to the inner ring for the entire period the load is to be turned "ON". When a tripper is pushed to the outside, the switch is in the "DEFROST" position. Each defrost tripper represents 15 minutes of defrost time. The timer is factory set for four defrost cycles daily: 4:00AM, 10:00AM, 4:00PM, and 10:00PM. Each defrost cycle is programmed for 45 minutes duration. The defrost times may be changed to initiate at periods of low activity (trippers pushed out will close contacts to terminals 1 & 3).

Note: If the defrost termination thermostat fails to close, the fail safe setting on the timer will terminate the defrost cycle. The timer starts the defrost cycle automatically at the predetermined times. A setting of two to four defrost cycles per day is typical. For heavier frost loads, additional cycles may be required.

When the defrost cycle begins:

1. Switch 2 to 4 opens in the time clock, breaking the circuit to the room thermostat, liquid line solenoid, and evaporator fan motors. This allows the compressor to pump down and shut off. Simultaneously, switch 1 to 3 closes in the timer, energizing the defrost heaters.
2. The heaters increase the coil temperatures above 32°F, melting the frost off the coil.
3. When the coil warms to approximately 55°F, the defrost termination thermostat closes and energizes the switching solenoid in the timer. At this time, switch 1 to 3 in the timer opens, terminating the defrost heaters. Simultaneously, switch 2 to 4 closes in the time clock, energizing the temperature control circuit.
4. Suction pressure rises, the low pressure control closes, and the compressor starts.
5. The fan relay closes when the coil temperature reaches approximately 30°F. This energizes the fan motors.
6. The system operates in the refrigeration cycle until another defrost cycle is initiated by the timer.

Maintenance

Maintenance Chart

Area	Task	Frequency
Evaporator	Check for proper defrosting	Monthly
	Clean the coil and drain pan	Every 6 months
	Check for proper drainage	
Condenser	Inspect /clean the coil if the air supply is near polluting sources (such as cooking appliances)	Monthly
	Clean the coil surface	Every 3 months
General	Check/tighten all electrical connections	Every 6 months
	Check all wiring and insulators	
	Check contactor for proper operation and contact point deterioration	
	Check all fan motors	
	Tighten fan set screws, and motor mount nuts and bolts	
	For semi-hermetics, check the oil level in the system	
	Check the operation of the control system	
	Make certain all safety controls are operating properly	
	Check operation of the drain line heater and examine for cuts and abrasions	
	Check/tighten all mechanical/flare connections	

⚠CAUTION

Failure to keep the condenser coil clean will result in reduced airflow through the condenser, resulting in poor system performance and premature compressor failure.

⚠MISE EN GARDE

Le manquement à maintenir la propreté du serpentin réfrigérant aura pour résultat une réduction de la circulation d'air dans le condenseur, entraînant un rendement médiocre du système et une défaillance prématurée du compresseur.

Polyol Ester (POE) Lubricants:

Polyol Ester (POE) lubricants quickly absorb moisture from the ambient surroundings. POE lubricants absorb moisture more rapidly and in greater quantity than conventional mineral oils. Because moisture levels greater than 100 PPM will result in system corrosion and component failure, it is essential that system exposure to ambient conditions be kept to a minimum.

If a system is left open to the atmosphere for more than 15 minutes, the liquid line drier and compressor oil must be replaced. Drain at least 95% of the oil from the compressor suction port. Measure the amount of removed oil, and replace it with exactly the same amount of new POE oil. Mobil EAL™ ARCTIC 22 CC is the preferred Polyol Ester

Polyol Ester (POE) Lubricants (continued):

lubricant because of its particular additives. ICI Emkarate RL 32S is an acceptable alternative when the Mobil is not available. These POE lubricants must be used with HFC refrigerants. Lubricants are packaged in specially designed, sealed containers. Once opened, use the lubricant immediately. Properly dispose of any unused lubricant.

Troubleshooting Charts

Evaporator Troubleshooting Chart:

Problem	Possible Cause	Corrective Action
Fan(s) will not operate.	Main switch open	Close switch
	Blown fuse(s)	Replace fuse(s). Check for short circuits or overload conditions.
	Defective motor	Replace motor.
	Defective timer or defrost thermostat	Replace defective component.
	Unit in defrost cycle	Wait for completion of cycle.
Walk-in temperature too high.	Thermostat set too high	Adjust thermostat.
	Superheat too high	Adjust thermal expansion valve.
	System low on refrigerant	Locate and repair leak, recover, evacuate and recharge.
	Coil iced up	Manually defrost coil. Check defrost controls.
Ice accumulating on ceiling around evaporator and/or on fan guards, venturi, or blades.	Defrost duration is too long	Adjust defrost termination thermostat (if adjustable).
	Fan delay not delaying fans after defrost period	Replace defective defrost thermostat.
	Defective defrost thermostat or timer	Replace defective component.
	Too many defrost cycles per day	Reduce number of defrost cycles per day.
Frost on coil after defrost cycle.	Coil temperature not getting above freezing point during defrost	Check heater operation
	Not enough defrost cycles per day	Adjust timer for more defrost cycles per day
	Defrost cycle too short	Adjust timer for longer cycle, check defrost thermostat mounting
	Defective timer or defrost thermostat	Replace defective component.
Ice accumulating in drain pan.	Defective heater	Replace heater.
	Unit not pitched properly	Check and adjust.
	Drain line plugged	Clean drain line.
	Defective drain line heater	Replace heater.
	Defective timer or thermostat	Replace defective component.

Condensing Unit Troubleshooting Chart:

Problem	Possible Cause	Corrective Action
Compressor will not run.	Main switch open	Close switch
	Fuse blown	Check electrical circuits and motor winding for shorts or grounds. Investigate for possible overloading. Replace fuse after fault is corrected.
	Thermal overloads tripped	Overloads are automatically reset. Check unit closely when unit comes back on line.
	Defective contactor or coil	Repair or replace
	System shut down by safety devices	Determine type and cause of shutdown and correct
	No cooling required	None. Wait until cooling is required.
	Liquid line solenoid will not open.	Repair or replace coil.
	Low pressure switch will not close.	Replace switch
	Motor electrical trouble	Check motor for open windings or short circuit.
	Loose wiring	Check all wire junctions. Tighten all terminal screws.
Compressor noisy or vibrating	Flooding of refrigerant into crankcase	Check superheat setting of expansion valve
	Improper pipe support	Relocate or add hangers
	Worn compressor	Replace compressor
High discharge pressure	Non-condensable in system	Recover, evacuate and charge
	System overcharged with refrigerant	Remove excess charge
	Discharge shut-off valve partially closed	Open valve
	Fan not running	Check electrical circuit or replace defective fan motor
	Insufficient condenser air supply	Check for cause and correct
	Dirty condenser coil	Clean coil
Low discharge pressure	Faulty head pressure control	Check head pressure control operation.
	Suction shut-off valve partially closed	Open valve
	Insufficient refrigerant in system	Locate and repair leak, recover, evacuate and recharge
	Low suction pressure	Check for proper refrigerant charge

Condensing Unit Troubleshooting Chart (continued):

Problem	Possible Cause	Corrective Action
High suction pressure	Excessive load	Reduce load or add additional equipment
	Expansion valve overfeeding	Secure and insulate TXV bulb or if required adjust superheat.
Low suction pressure	Lack of refrigerant	Locate and repair leak, recover, evacuate and charge.
	Evaporator dirty or iced	Clean
	Clogged liquid line or suction line filter-drier	Replace filter-drier
	Expansion valve malfunctioning	Check and reset for proper superheat
	Condensing temperature too low	Check head pressure control
	Improper TXV	Check for proper sizing
Compressor loses oil	Lack of refrigerant	Locate and repair leak, recover, evacuate and recharge
	Excessive compression ring blow-by	Replace compressor
	Refrigerant flood back	Maintain proper superheat at compressor
	Improper piping or traps	Correct piping
Compressor thermal protector switch open	Operating beyond design	Add facilities so that operating conditions are within allowable limits
	Discharge valve partially shut	Open valve
	Dirty condenser coil	Clean coil
	Overcharged system	Correct charge

Notes:

ArcticFox Local Area Dashboard & Alarms (LDA):

1. When the LDA is connected to the same network as ArcticFox controllers, it immediately and automatically scans and finds all ArcticFox controllers – Ethernet or Serial-ModBus.

    - Serve as a Permanent WiFi Service Tool
    - Display a Local Area Dashboard showing controllers connected to the customer's network
    - Connect controllers to ArcticFox SmartAccess customer portal without requiring controller upgrades
    - Send Email Alarms to multiple email recipients
    - View Serial devices in a webpage, make changes to setpoints, and receive alerts via email or text message
    - 366-day datalogging when used with the ArcticFox Flash Drive
    - Wirelessly tether to the local network (Wirelessly connect a controller to existing WiFi.)

2. The LDA allows customers to locally view all of their controllers in a single view, without a recurring fee. And, additionally, enables customers to access their controllers over the Internet, by functioning as a conduit to ArcticFox SmartAccess (available for a nominal monthly charge.)

ArcticFox LDA Kit includes the LDA & Accessories:



LDA Back Label:

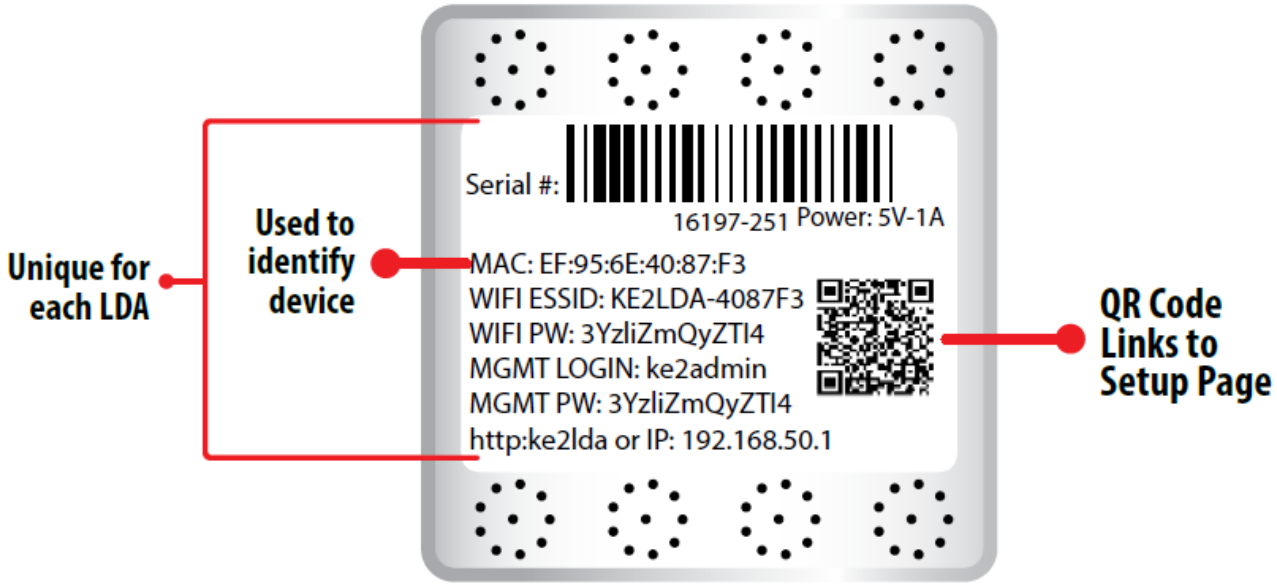

LDA Side View:

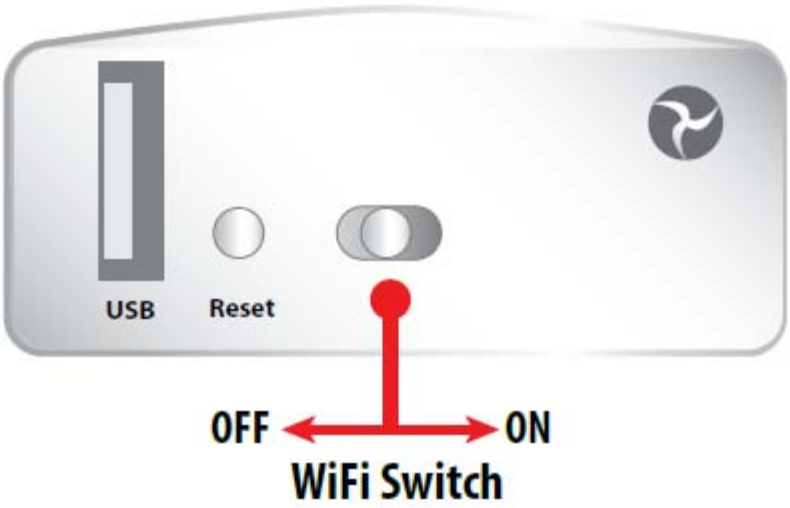

ModBus Configuration – First Installation Of ModBus Devices On LDA.

Step 1 – Daisy chain connections on controllers.

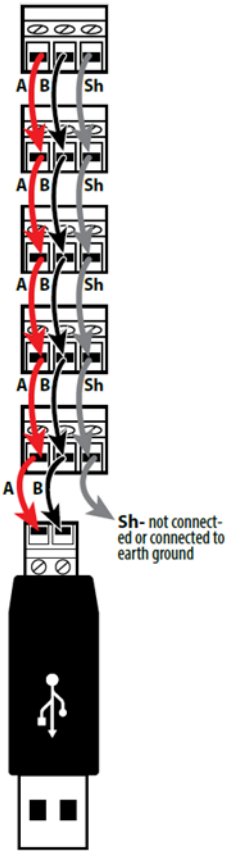

Step 2 – Finish wiring connection at USB adapter.

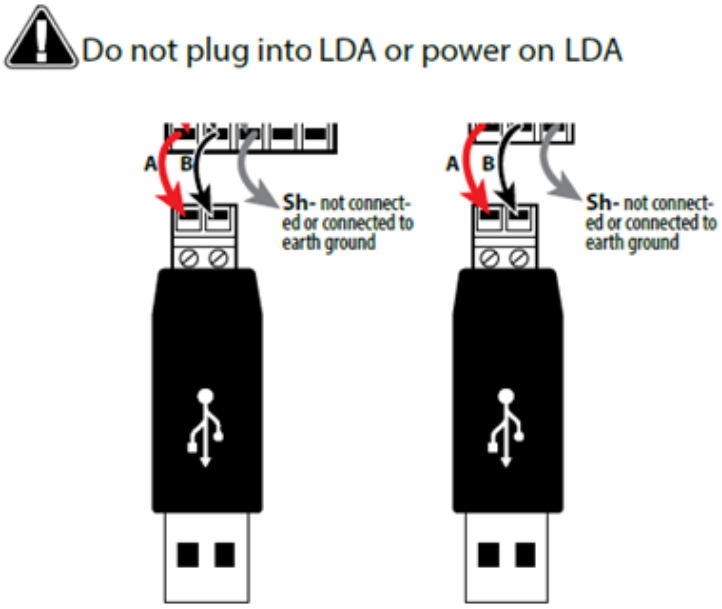

Step 3 – Power on controllers.

Step 4 – Change ModBus address on each controller.

> Each controller's ModBus address must be unique. Available addresses are 2-247.

Press and hold the ENTER button to access the Setpoints menu.

tS is displayed.



Then use the ▼ arrow until you see **Adr** (Address).



Press ENTER and the current address is displayed (default =1)

Change the address by pressing the ▲ or ▼ arrow to change the value. Use the ENTER button to move to the next digit. Available addresses are 2-247.

When address is set to the preferred value (ex. 123), press and hold ENTER for 3 seconds to save the address.



Example

The controller will return to the Adr screen when the setting is saved.



The setting change can be verified by pressing the ENTER button.

To exit, press the BACK button several times.

Step 5 – Plug the USB adapter into the LDA.



Step 6 – Power the LDA.

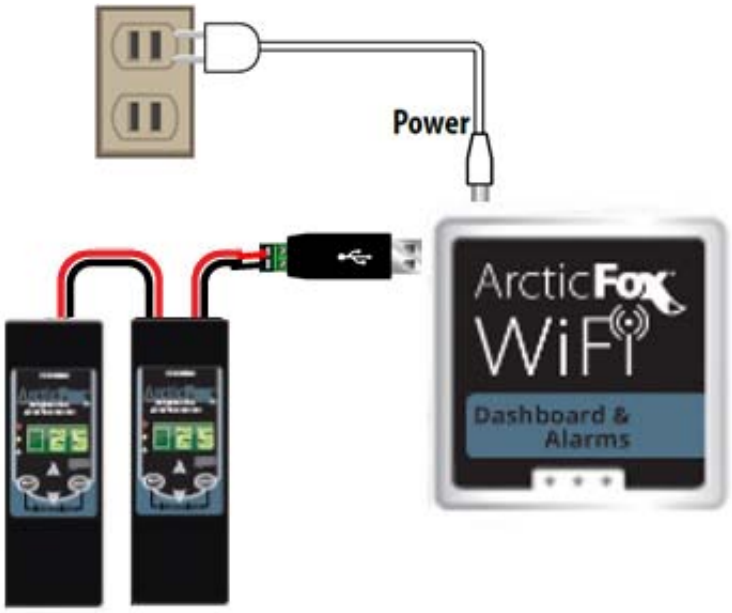

Installing the LDA: Option 1 – Connecting using the LDA as a permanent WiFi service tool.

Note: Each device must have a separate/unique Modbus address.

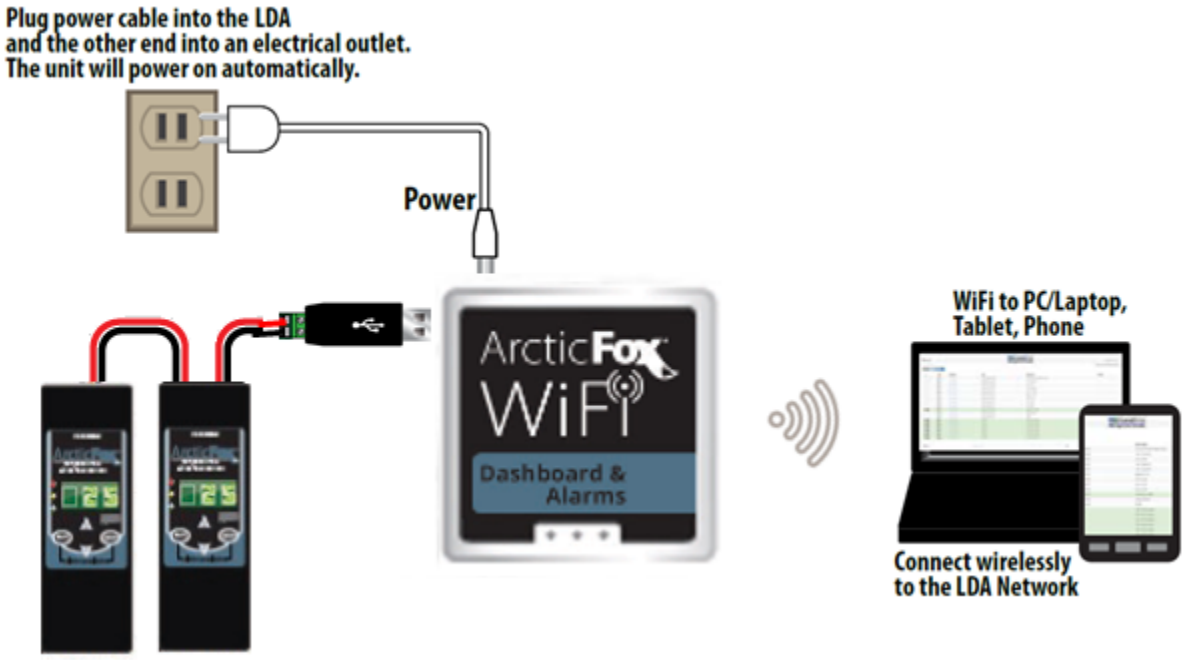

Installing the LDA: Option 2 – Connection direct to PC via cable or WiFi.

Note: Each device must have a separate/unique Modbus address.

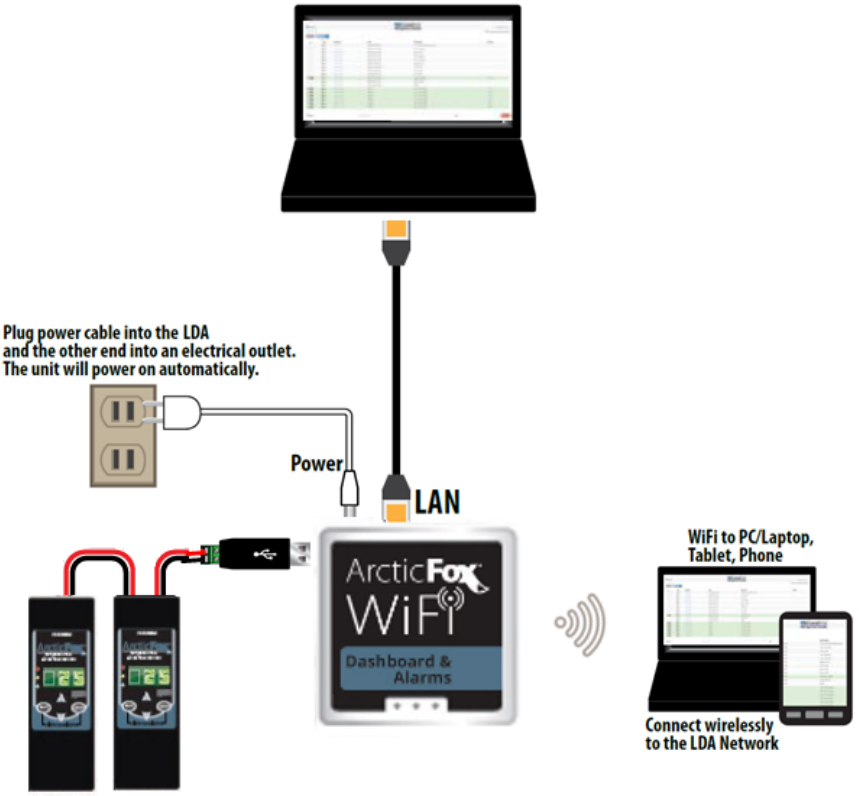

Installing the LDA: Option 3 – Connection direct to PC via cable without WiFi.
Note: Each device must have a separate/unique Modbus address.

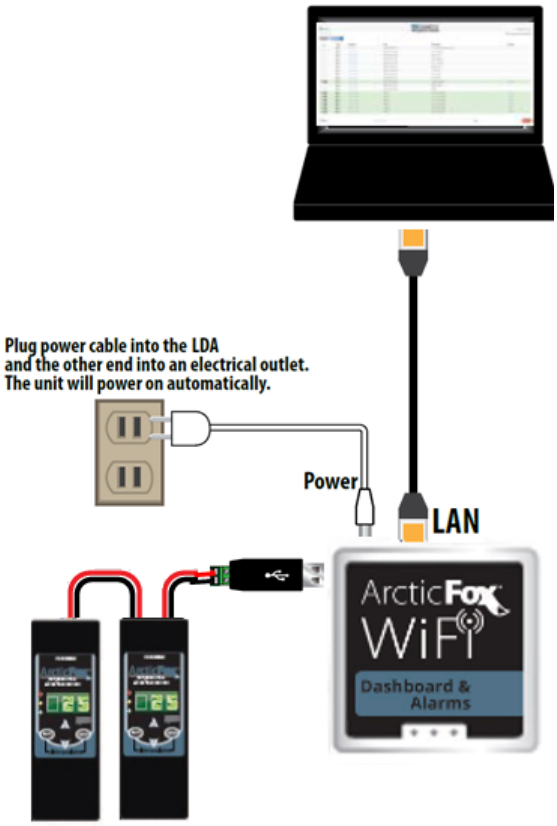

Using the Flash Drive for data logging the LDA.

1. Regardless of how the LDA is connected to the network, if the Flash Drive is used for data logging, the USB Hub is connected first. Then the Flash Drive, and the daisy-chained Serial-Modbus controllers, are connected to the ports in the USB Hub.



Accessing the local dashboard.

1. To access the LDA, connect to the same network as the device. Since it is an Ethernet device, speaking TCP/ IP, users can connect to it by simply launching their preferred web browser, and typing in the address bar: **https://aflda**



2. This brings the user to their local dashboard. Once connected to the dashboard, the user will immediately see up to 10 displayed controllers. For controllers on the network, simply click on the IP address of the controller, to immediately connect to that controller's home page.

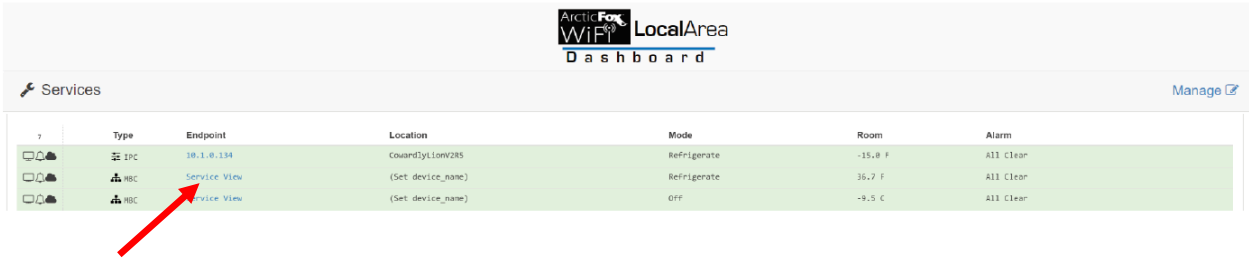

3. The user's web browser will launch a new tab, and open the controllers MasterView, giving immediate access to view the controller, as well as make changes.



Connecting the LDA to the internet:

You have 2 options when connecting the LDA to the internet – either hardwire the WAN port to the customer switch/router, or tethering to WiFi.

When in the manage page, click on the “Advanced” tab.

Clicking anywhere in the **Wi-Fi** box forces a scan for available wireless networks. Kolpak recommends connecting to the LDA via the LAN port. As the warning states you could be disconnected from Wi-Fi during the scan.

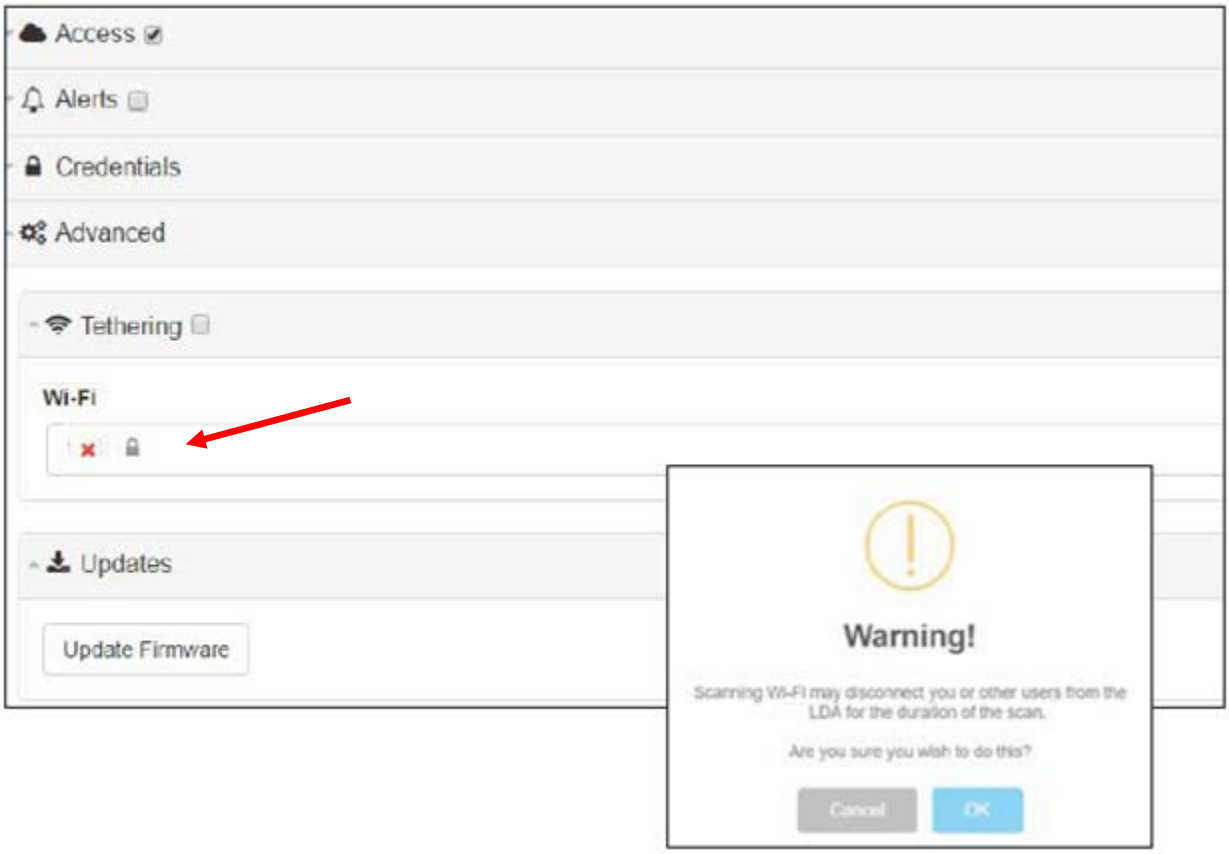

Pick the appropriate WiFi profile to connect.

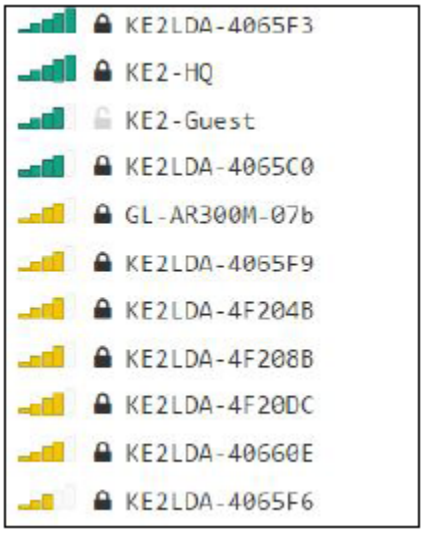

Enter the password, then check the Tethering box.



Allowing Kolpak to Remote Access:
It is often beneficial to allow Kolpak Technical Support to remotely access the portal to help assist with any problems.

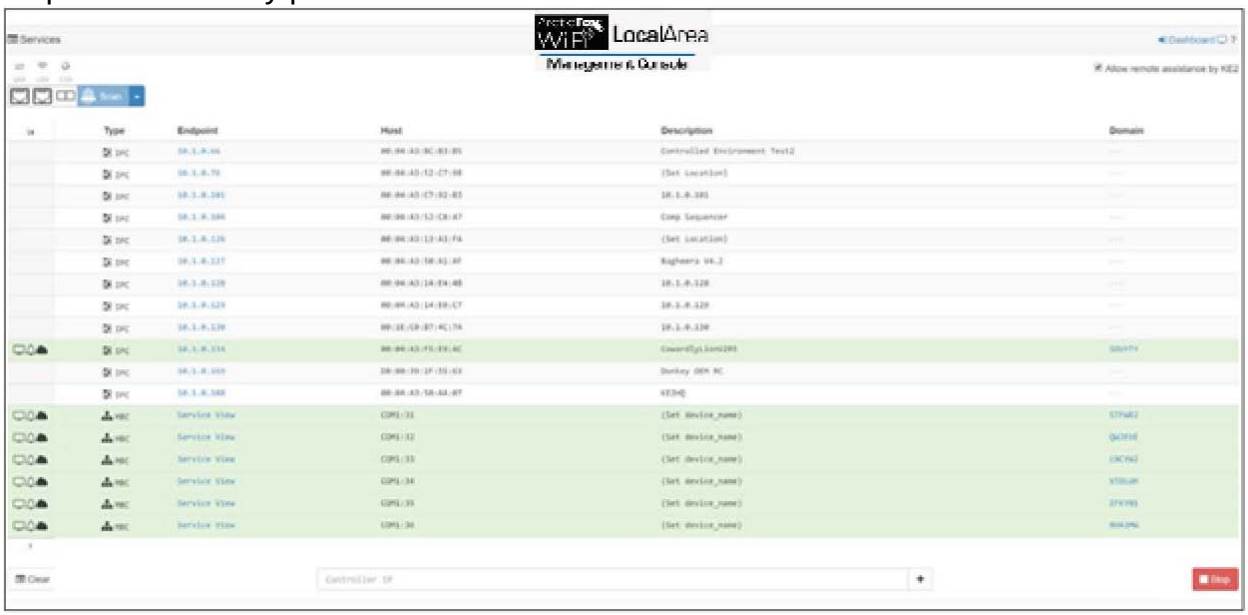

Manage Email Alerts - Designed to simplify email notifications, the LDA provides:

- Single-point to enter email information, up to 10 controllers.
- Manage the email addresses receiving alerts.
- Set who the email is from.
- Elect to either use ArcticFox email server, or a customer provided server.

Navigate to the Management screen.



The Alerts section is at the bottom of the listed options. To enable the functionality, click the box next to the alerts.

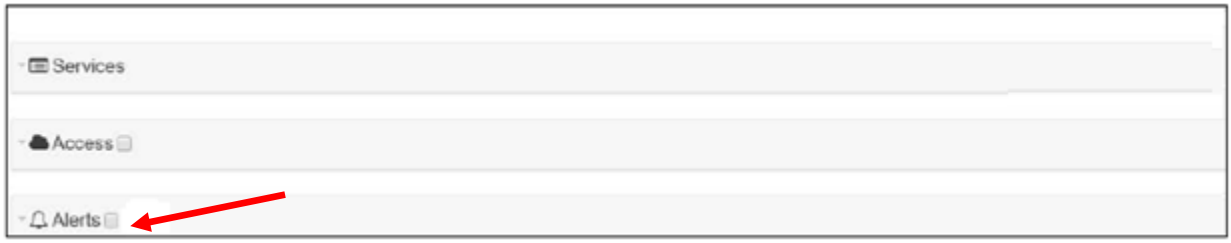

For questions pertaining to the Alerts, click on the ? near the top right on the screen.



A description on the Alerts feature is displayed.

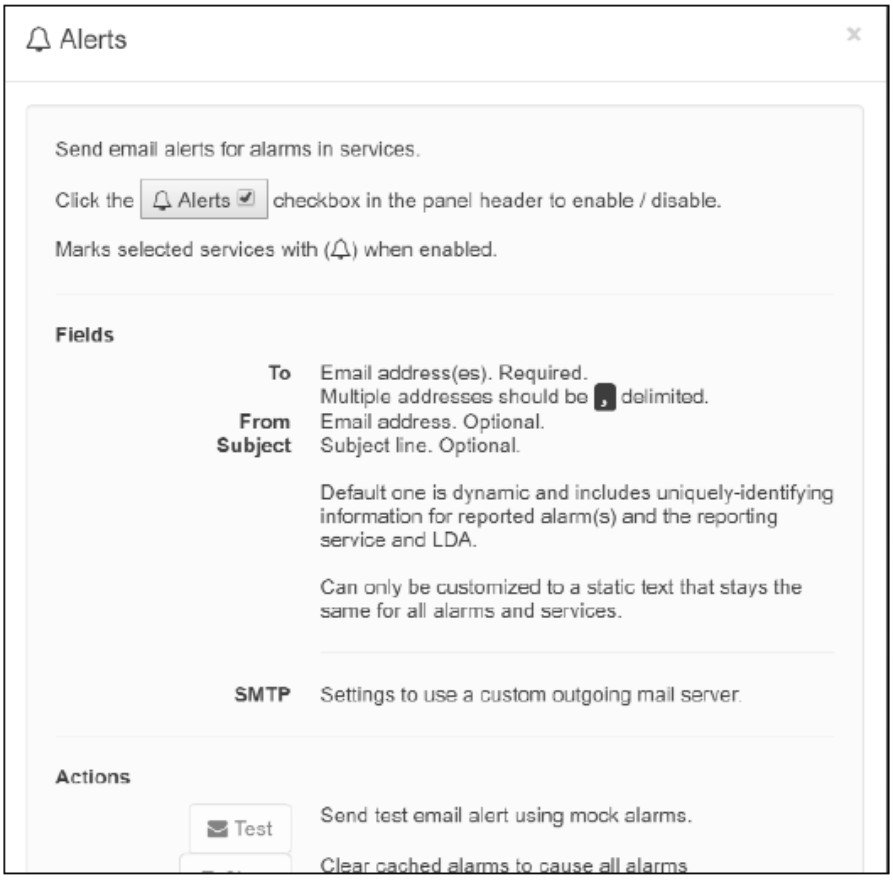

The field expands to enter an email address as well as define the From email and Subject line if desired.

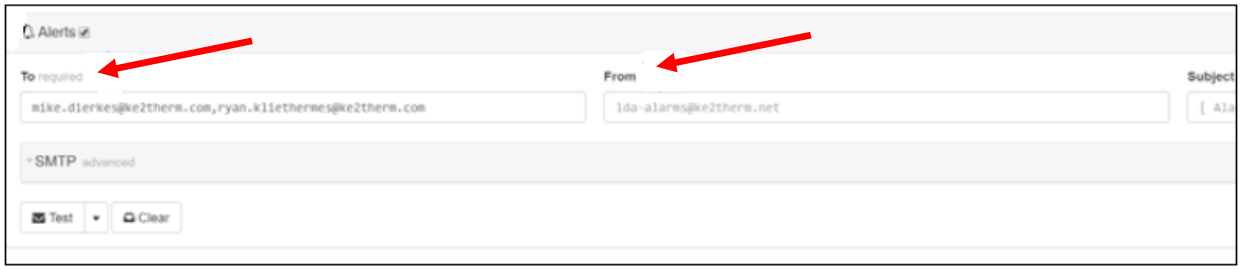

To:
The email addresses receiving the email alerts should be entered into this field. Multiple addresses should be separated with a comma as shown.

From:
If the default sender creates confusion for the party (parties) receiving the emails it can be changed to reflect the desired information.

When customers choose to use their own email server as the email relay, the SMTP section should be expanded. It can be expanded by clicking anywhere on the gray bar.

Once expanded, the appropriate information should be entered from the customer supplied email server.

Sample screenshot when accessing via cell phone.



When customers choose to use their own email server as the email relay, the **SMTP** section should be expanded. It can be expanded by clicking anywhere on the gray bar. Once expanded, the appropriate information should be entered from the customer supplied Email server.

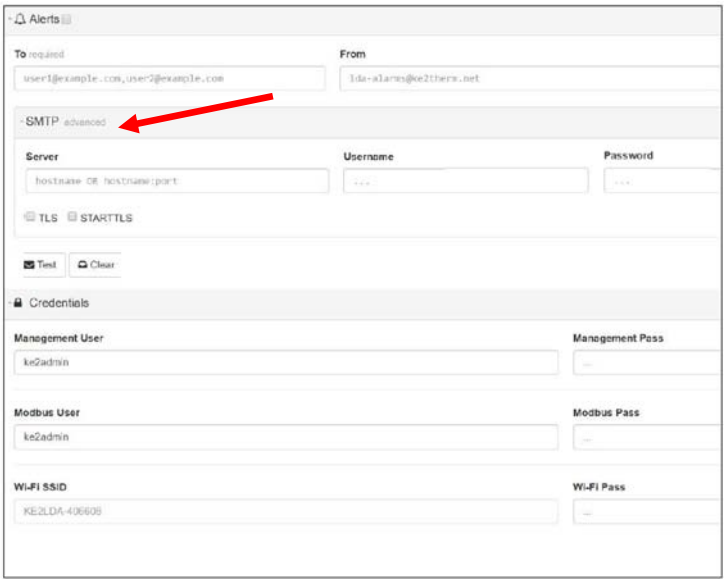

Server: hostname or hostname:port - The Host is the address of the email server being used to relay the email alarm. The Port defines the specific port used by the email server when routing mail. This is TCP25 by default.

Username: Enter the username for the account being used for authentication to the email server.

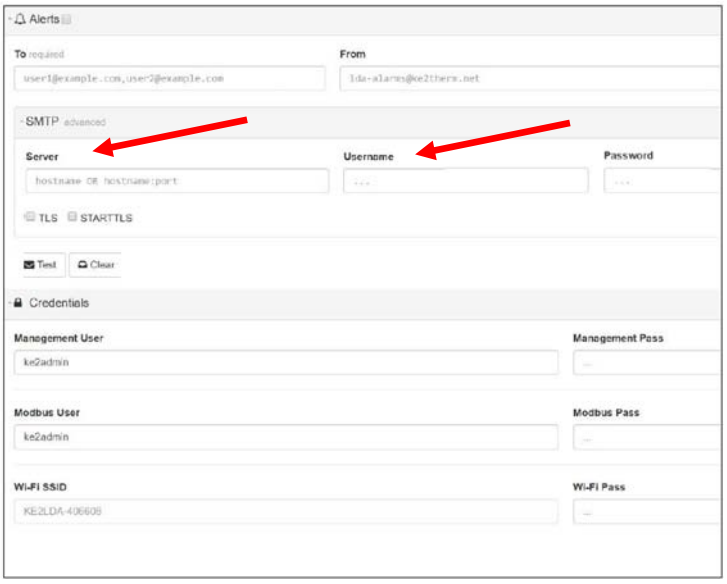

Password: The credentials for the Username being used for authentication.

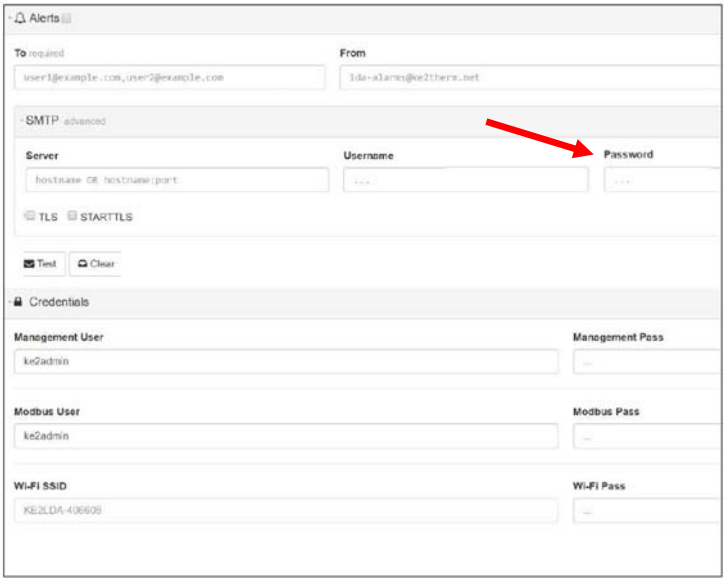

TLS: This option is selected when using secure email.

STARTTLS: This option will upgrade insecure connections to SSL/TLS.

When the proper information has been entered, the email service can be tested using the Test button. The Clear button clears alarms on published controllers. Will resend emails for controllers in alarm.



Credentials: Changing User Names & Passwords. Credentials are also changed on the Management Console.

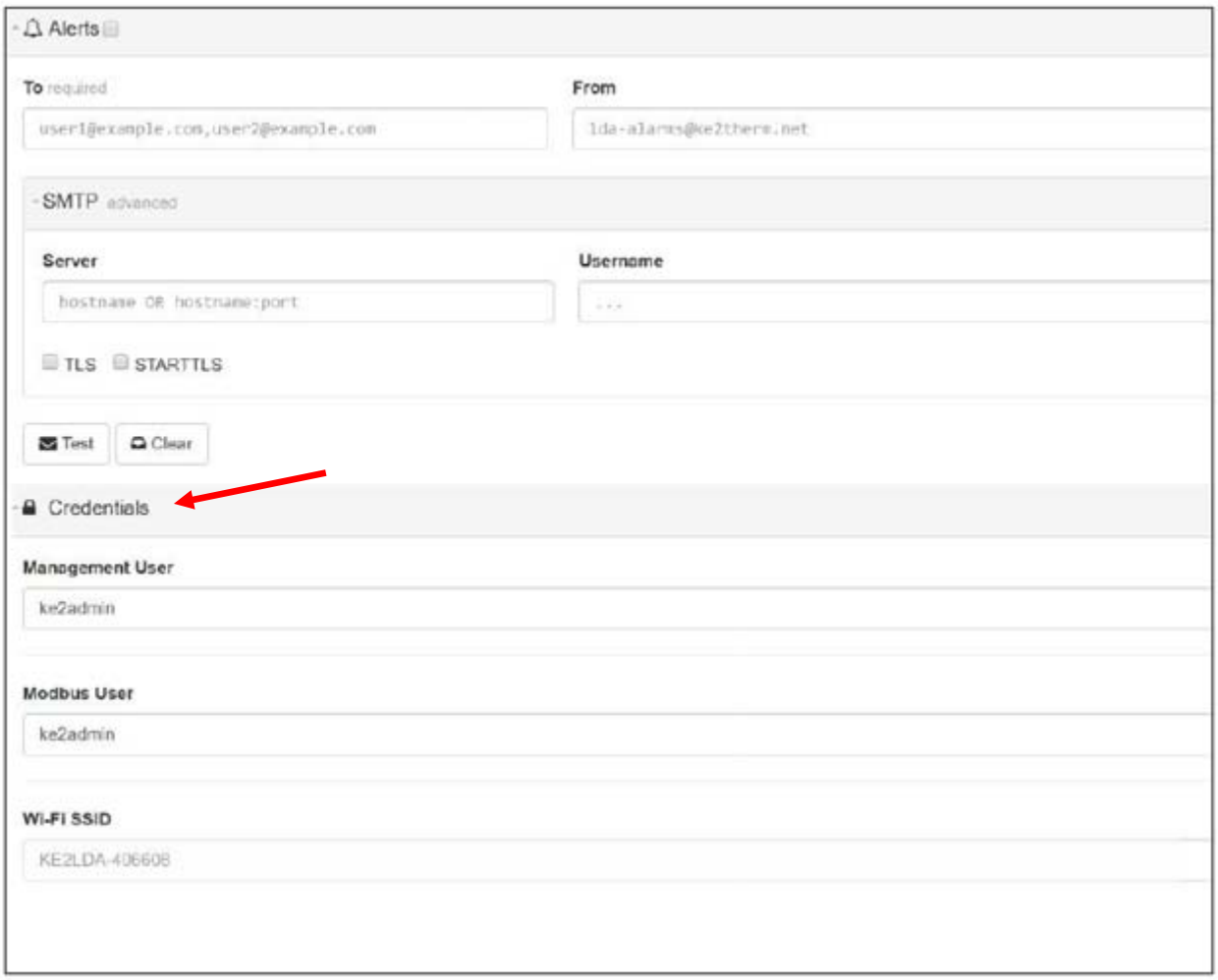

In the **Credentials** section, for user security purposes, the **Management User** name and **Management Password**, **Modbus User** name and **Modbus Password**, as well as the **Wi-Fi Password** for the LDA, can all be changed.

When changing the **Management User Credentials**, **Management User**, or **Management Password**, the changes are made independent of each other. You must re-authenticate, with the new credentials, after each change. You will be prompted to confirm, then redirected to the Login page.

NOTE: If login credentials are misplaced, the only option is to hold the reset button, and reset the LDA to factory settings, i.e. afadmin for all User and Passwords. This will also reset the wireless credentials, to those listed on the back label of the LDA.

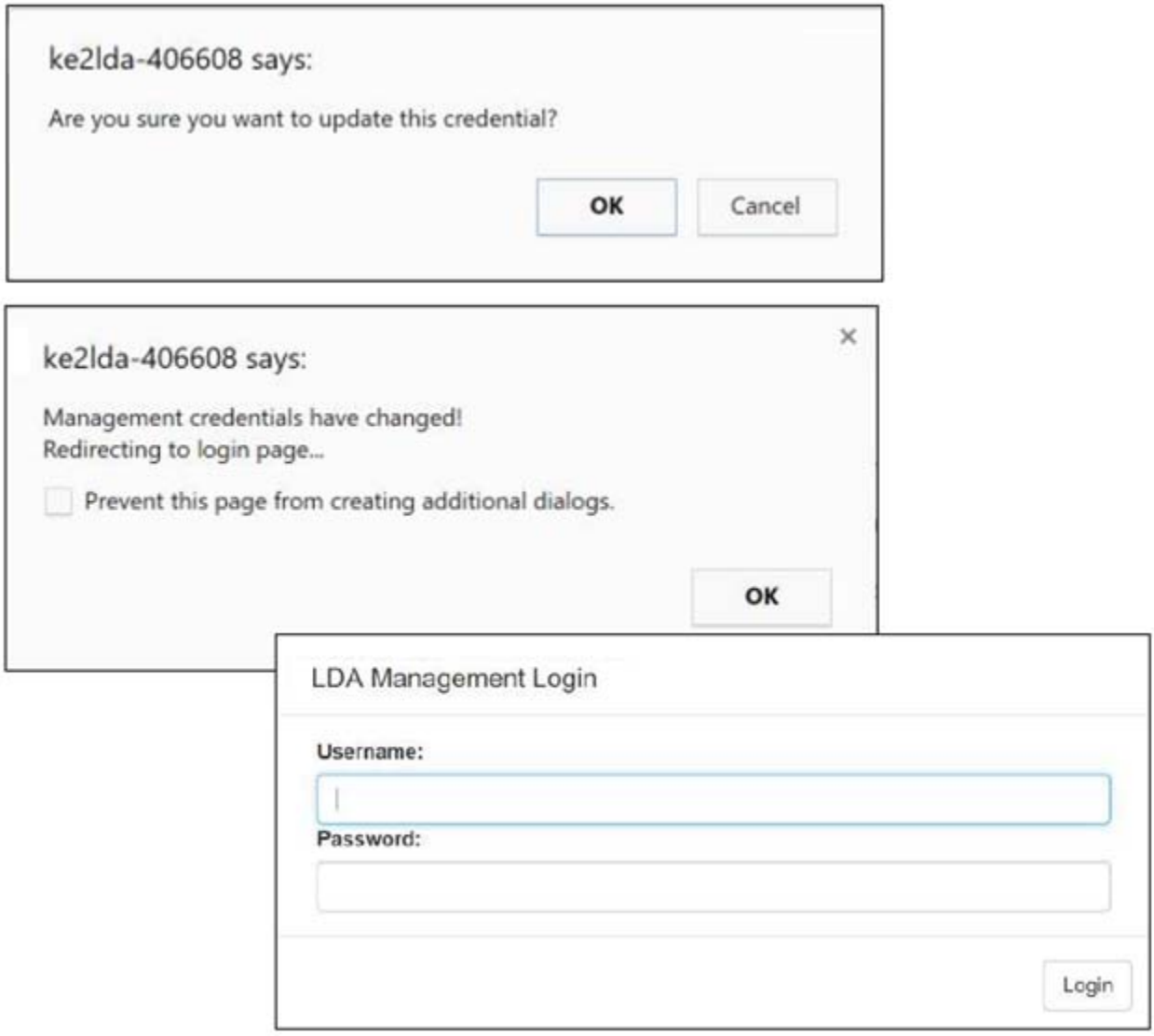

Modbus (Serial) Access:
For the ModBus (serial) devices you can access the web page for the controller by clicking on the **Services** view from either the **Management Console** or the **Dashboard** for published devices.

When you open the **Services** view you will see the web page in either Simple or Advanced View.

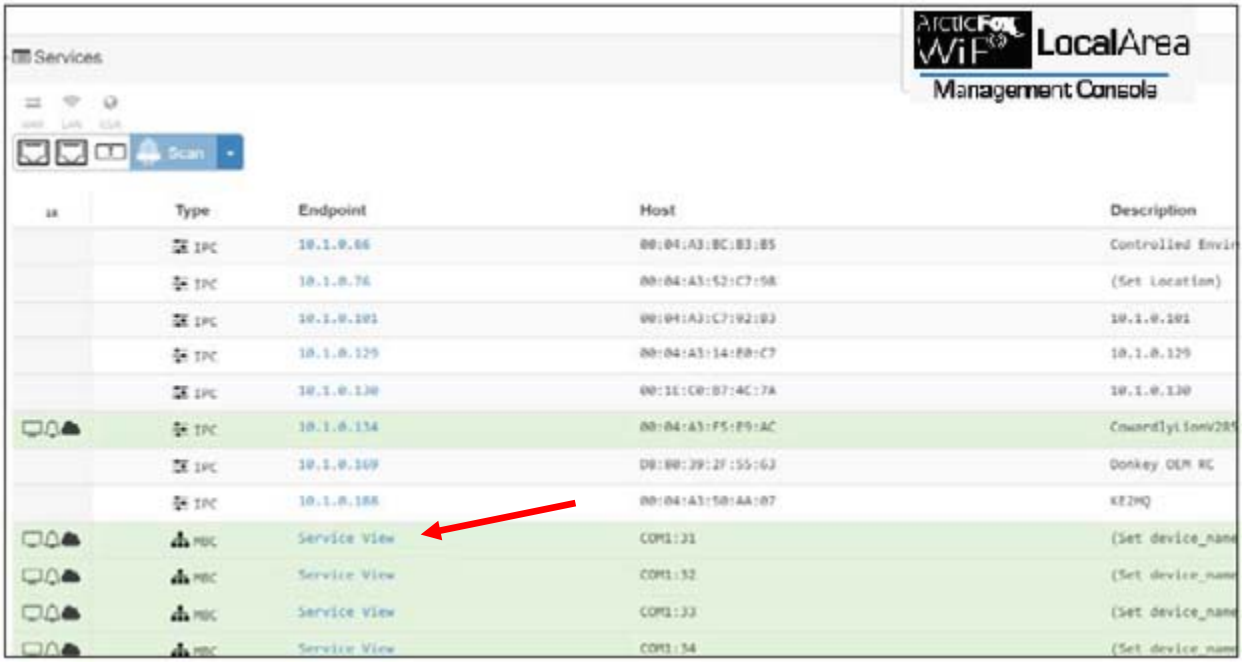

Simple View:
In Simple View you will see the System State as individual icons. This is the current state of the device.

To access Advanced View click on the **Show Advanced View**



Advanced View:
Click on the **?** in any of the setpoint areas to show the limits for those setpoints. For example the **Room Temperature**.



Click within the grey area to make changes to a setpoint.

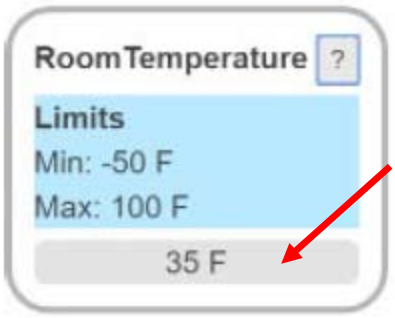

Setting a setpoint outside of the limits…will return a **"Validation failed"** message.

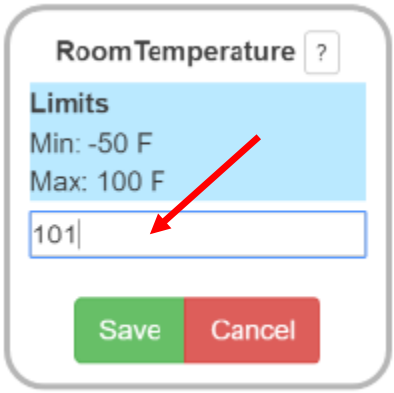

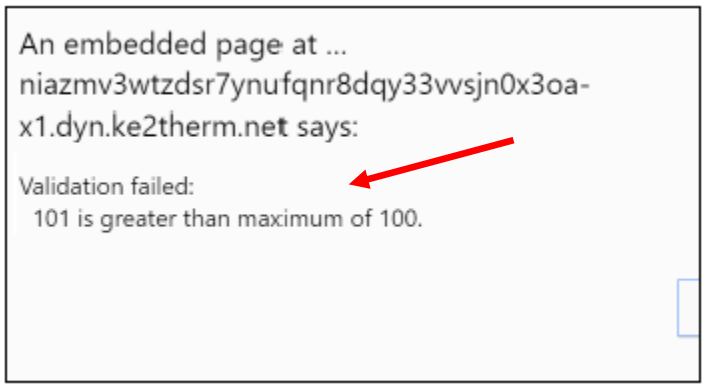

For any changes to Modbus setpoints or device_name changes you will be prompted for the Modbus Device Login. The defaults are **afadmin** and **afadmin**, unless they were changed on the authentication screen.

NOTE: This will be a one time login for your active session. The first setpoint that's changed will prompt you for the password. Additional setpoint changes on that controller, or other Modbus controller's, will not prompt for the password.



Sample screenshot when accessing via cell phone.



For security purposes, **Logout** when finished making all ModBus changes. The **Success** image will display to verify that you have successfully logged out.

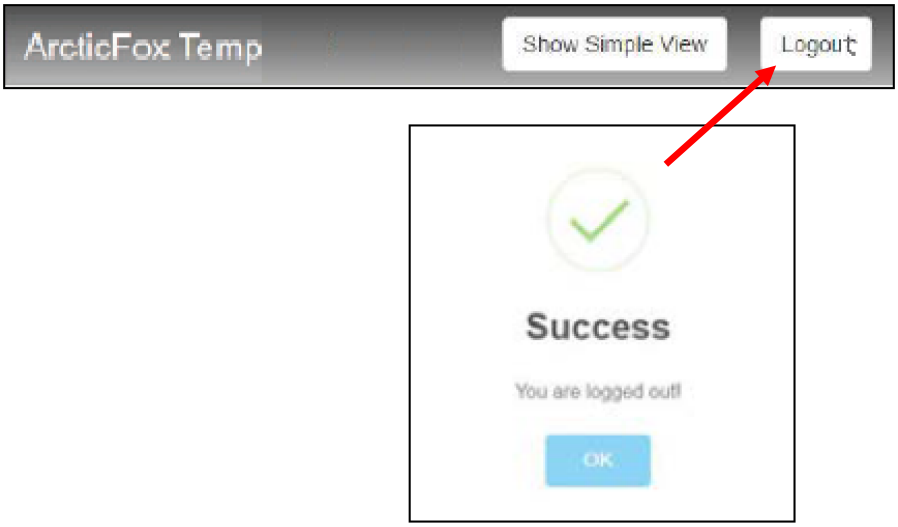

Remote Access Setup:
ArcticFox LDA provides the user with simple remote access to Smart Access portal, which provides quick and easy, real time access to your refrigeration systems 24/7. No port forwarding. No VPN. All the LDA needs is a physical connection to the network router with a cat 5 cable. Smart Access automatically connects to your personal web portal, providing a dashboard of the controllers you publish with the LDA. For questions pertaining to the Access feature, click on the **?** near the top right of the screen. A description of the Access page features is displayed.

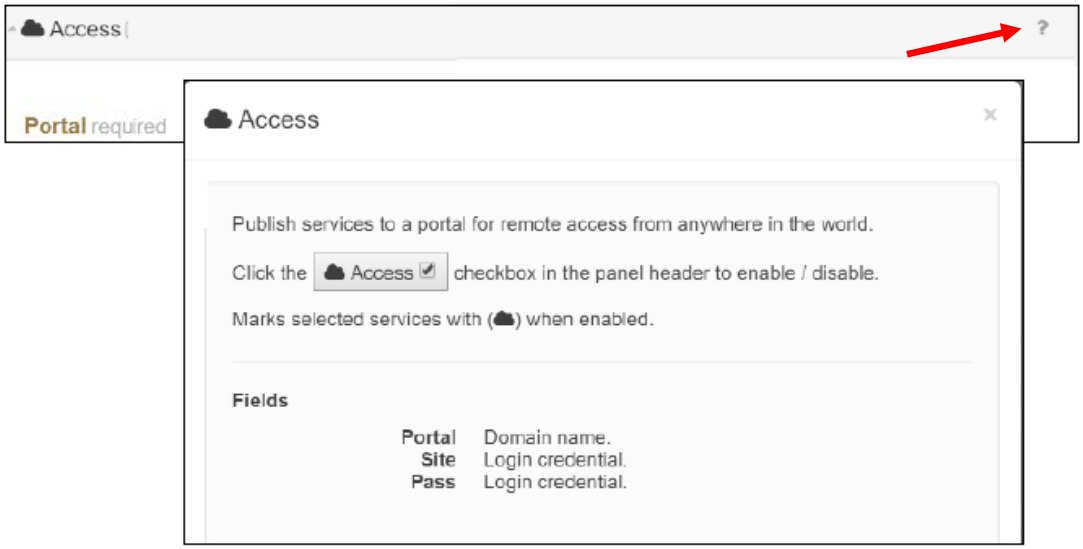

Portal: The portal is the internet address used to access the controllers remotely. This should NEVER be changed without directions from Kolpak. Changing it may result in loss of remote access.

Site: The default Site for all LDA devices **AFLDA-*and the last 6 digits of MAC Address.*** Kolpak recommends changing this to something easily remembered by the person who will be accessing the controllers remotely.

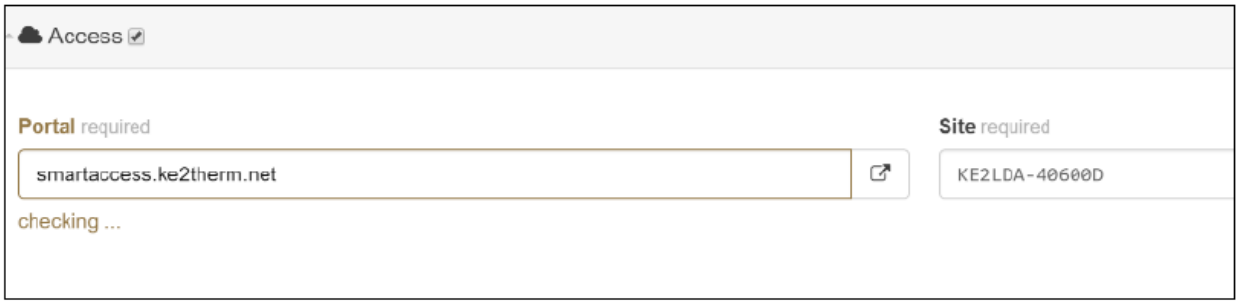

Pass: The default Pass for the LDA is the Mac Address, separated by dashes, rather than colons. For example if the LDA's Mac Address is E4:95:6E:60:0D the Password is E4-95-6E-60-0D.

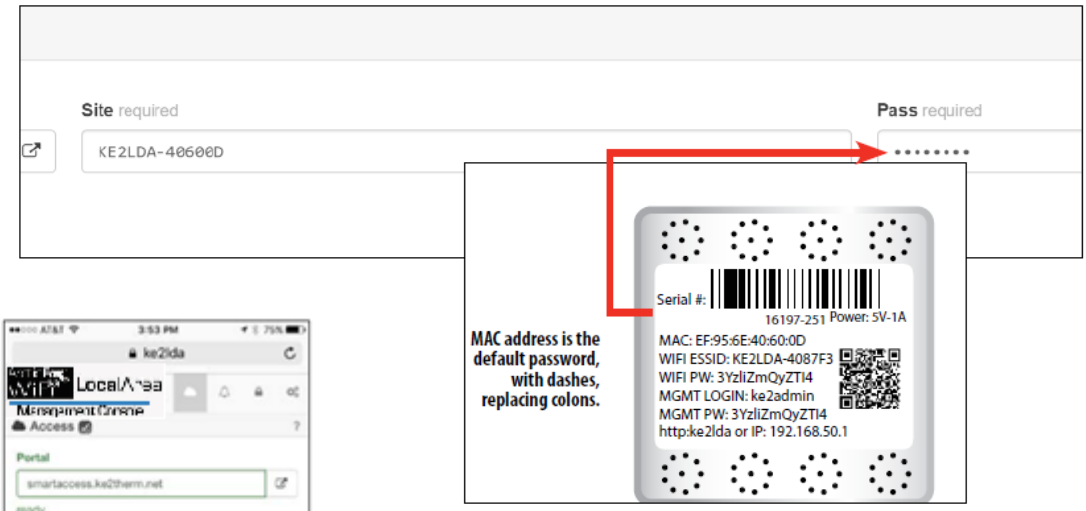



Sample screenshot when accessing via cell phone.

By clicking on the arrow next to your portal name (or entering https://afwifi.net in your web browser) will take you to the site.

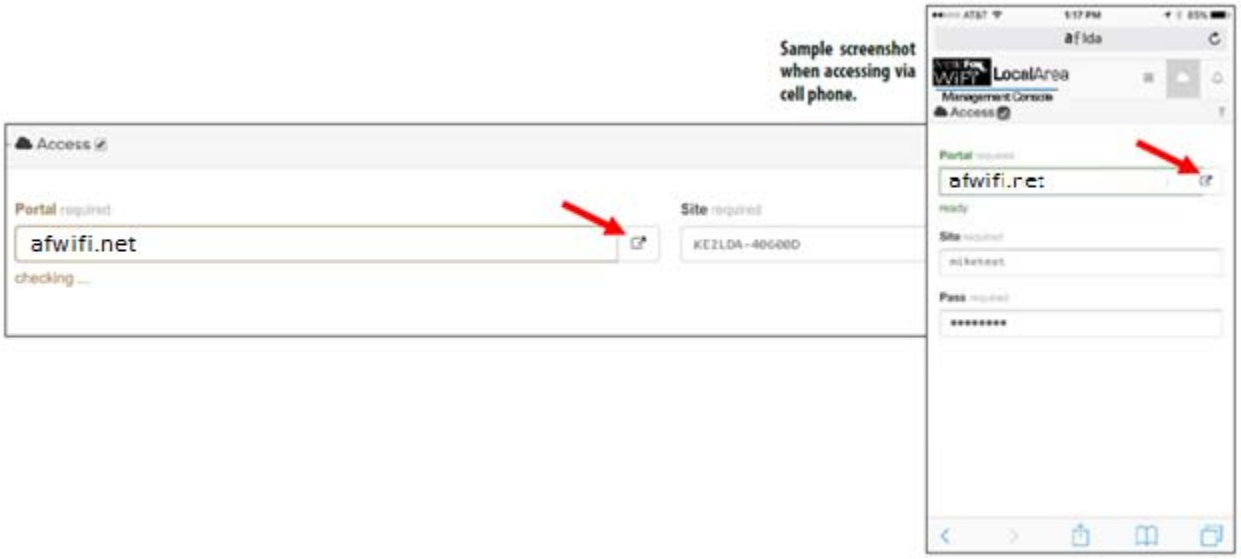

Use the site name and credentials you setup on the previous page to access your site.

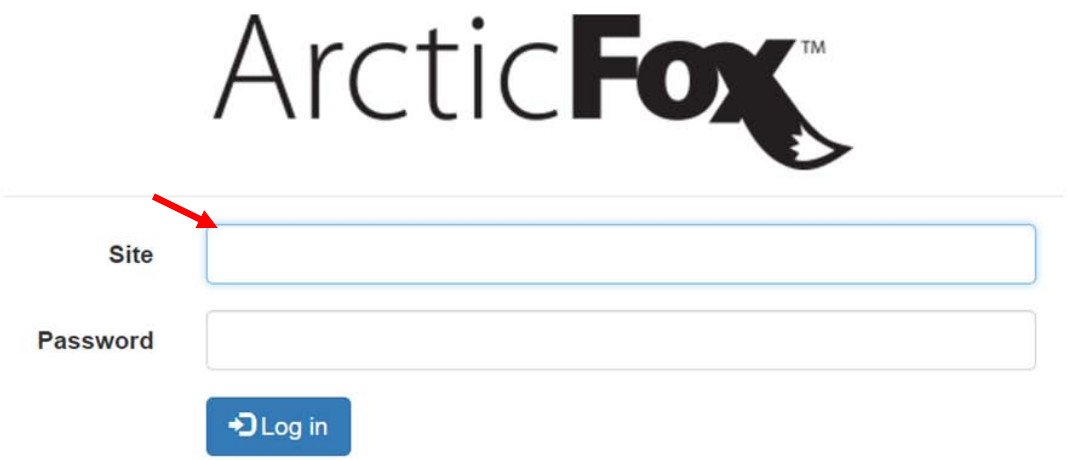

Upon sign in, your site will look like this. Select the **Fields** drop down to customize the dashboard.

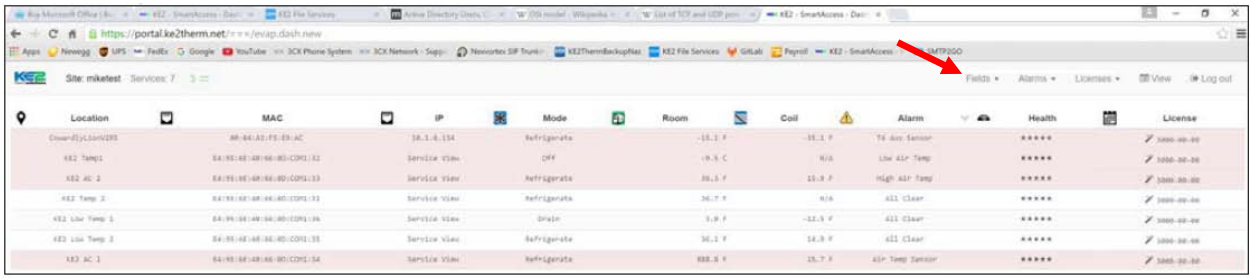

Show only the fields that are important to you, by clicking on the field name, and checking or unchecking the boxes.

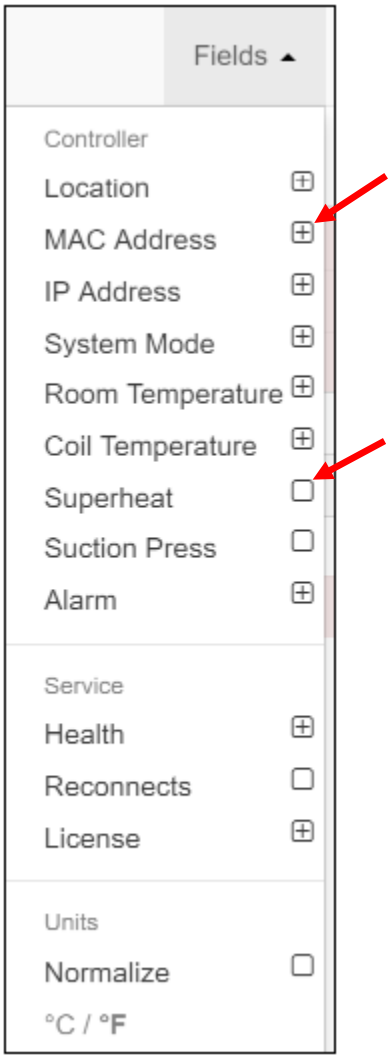

To setup Alarms notifications select the **Alarms** drop down and enter the email addresses.

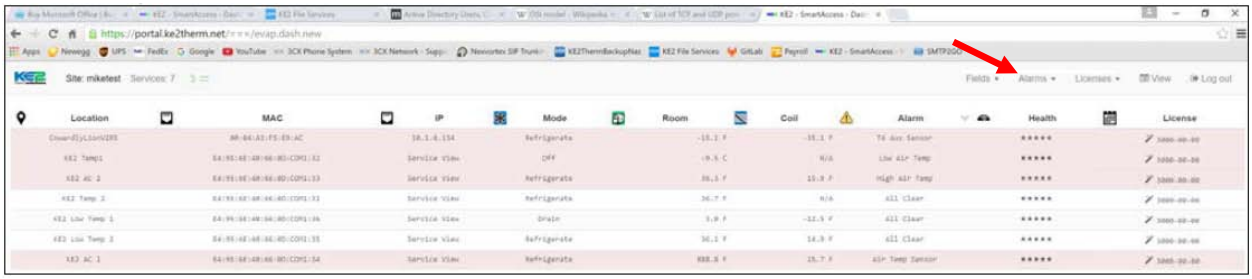

When a controller goes into alarm, an email notification is sent to everyone in the list.

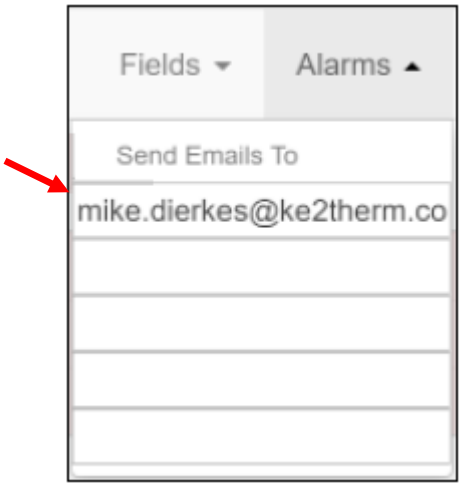

NOTE: This is not required if Alarm notifications were already setup on the LDA.

Click the **Licenses** drop down to easily purchase Smart Access.

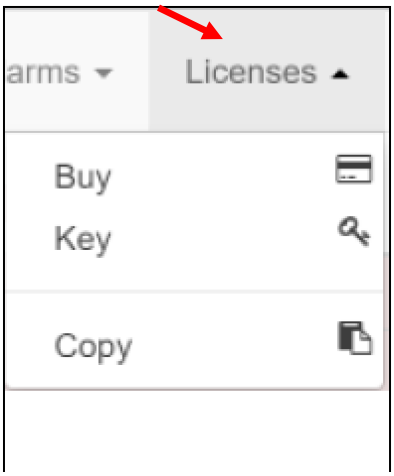

Evaporator Troubleshooting Chart:

Problem	Possible Cause	Corrective Action
Fan(s) will not operate.	Main switch open	Close switch
	Blown fuse(s)	Replace fuse(s). Check for short circuits or overload conditions.
	Defective motor	Replace motor.
	Defective timer or defrost thermostat	Replace defective component.
	Unit in defrost cycle	Wait for completion of cycle.
Walk-in temperature too high.	Thermostat set too high	Adjust thermostat.
	Superheat too high	Adjust thermal expansion valve.
	System low on refrigerant	Locate and repair leak, recover, evacuate and recharge.
	Coil iced up	Manually defrost coil. Check defrost controls.
Ice accumulating on ceiling around evaporator and/or on fan guards, venturi, or blades.	Defrost duration is too long	Adjust defrost termination thermostat (if adjustable).
	Fan delay not delaying fans after defrost period	Replace defective defrost thermostat.
	Defective defrost thermostat or timer	Replace defective component.
	Too many defrost cycles per day	Reduce number of defrost cycles per day.
Frost on coil after defrost cycle.	Coil temperature not getting above freezing point during defrost	Check heater operation
	Not enough defrost cycles per day	Adjust timer for more defrost cycles per day
	Defrost cycle too short	Adjust timer for longer cycle, check defrost thermostat mounting
	Defective timer or defrost thermostat	Replace defective component.
Ice accumulating in drain pan.	Defective heater	Replace heater.
	Unit not pitched properly	Check and adjust.
	Drain line plugged	Clean drain line.
	Defective drain line heater	Replace heater.
	Defective timer or thermostat	Replace defective component.

Condensing Unit Troubleshooting Chart:

Problem	Possible Cause	Corrective Action
Compressor will not run.	Main switch open	Close switch
	Fuse blown	Check electrical circuits and motor winding for shorts or grounds. Investigate for possible overloading. Replace fuse after fault is corrected.
	Thermal overloads tripped	Overloads are automatically reset. Check unit closely when unit comes back on line.
	Defective contactor or coil	Repair or replace
	System shut down by safety devices	Determine type and cause of shutdown and correct
	No cooling required	None. Wait until cooling is required.
	Liquid line solenoid will not open.	Repair or replace coil.
	Low pressure switch will not close.	Replace switch
	Motor electrical trouble	Check motor for open windings or short circuit.
	Loose wiring	Check all wire junctions. Tighten all terminal screws.
Compressor noisy or vibrating	Flooding of refrigerant into crankcase	Check superheat setting of expansion valve
	Improper pipe support	Relocate or add hangers
	Worn compressor	Replace compressor
High discharge pressure	Non-condensable in system	Recover, evacuate and charge
	System overcharged with refrigerant	Remove excess charge
	Discharge shut-off valve partially closed	Open valve
	Fan not running	Check electrical circuit or replace defective fan motor
	Insufficient condenser air supply	Check for cause and correct
	Dirty condenser coil	Clean coil
Low discharge pressure	Faulty head pressure control	Check head pressure control operation.
	Suction shut-off valve partially closed	Open valve
	Insufficient refrigerant in system	Locate and repair leak, recover, evacuate and recharge
	Low suction pressure	Check for proper refrigerant charge

Condensing Unit Troubleshooting Chart (continued):

Problem	Possible Cause	Corrective Action
High suction pressure	Excessive load	Reduce load or add additional equipment
	Expansion valve overfeeding	Secure and insulate TXV bulb or if required adjust superheat.
Low suction pressure	Lack of refrigerant	Locate and repair leak, recover, evacuate and charge.
	Evaporator dirty or iced	Clean
	Clogged liquid line or suction line filter-drier	Replace filter-drier
	Expansion valve malfunctioning	Check and reset for proper superheat
	Condensing temperature too low	Check head pressure control
	Improper TXV	Check for proper sizing
Compressor loses oil	Lack of refrigerant	Locate and repair leak, recover, evacuate and recharge
	Excessive compression ring blow-by	Replace compressor
	Refrigerant flood back	Maintain proper superheat at compressor
	Improper piping or traps	Correct piping
Compressor thermal protector switch open	Operating beyond design	Add facilities so that operating conditions are within allowable limits
	Discharge valve partially shut	Open valve
	Dirty condenser coil	Clean coil
	Overcharged system	Correct charge

Notes:

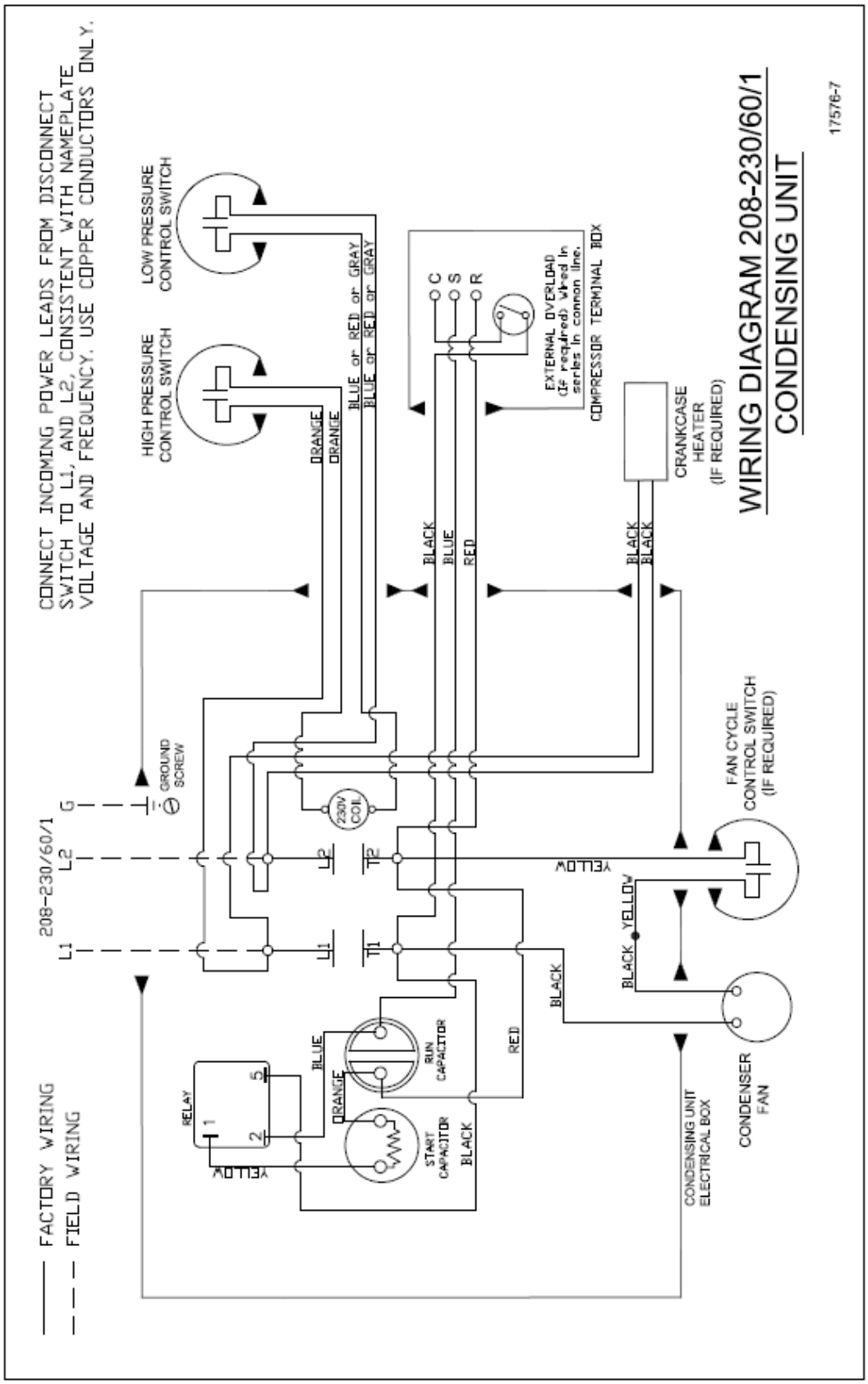
CONNECT INCOMING POWER LEADS FROM DISCONNECT SWITCH TO L1, AND L2, CONSISTENT WITH NAMEPLATE VOLTAGE AND FREQUENCY. USE COPPER CONDUCTORS ONLY.
WIRING DIAGRAM 208-230/60/1
CONDENSING UNIT
17576-7
FACTORY WIRING
FIELD WIRING
208-230/60/1
L1
L2
G
GROUND SCREW
HIGH PRESSURE CONTROL SWITCH
LOW PRESSURE CONTROL SWITCH
ORANGE
BLUE or RED or GRAY
C
S
R
EXTERNAL OVERLOAD (If required) Wired in series in common line.
COMPRESSOR TERMINAL BOX
CRANKCASE HEATER (IF REQUIRED)
BLACK
BLUE
RED
230V COIL
L2
T2
L1
T1
YELLOW
FAN CYCLE CONTROL SWITCH (IF REQUIRED)
RELAY
RUN CAPACITOR
START CAPACITOR
CONDENSER FAN
CONDENSING UNIT ELECTRICAL BOX

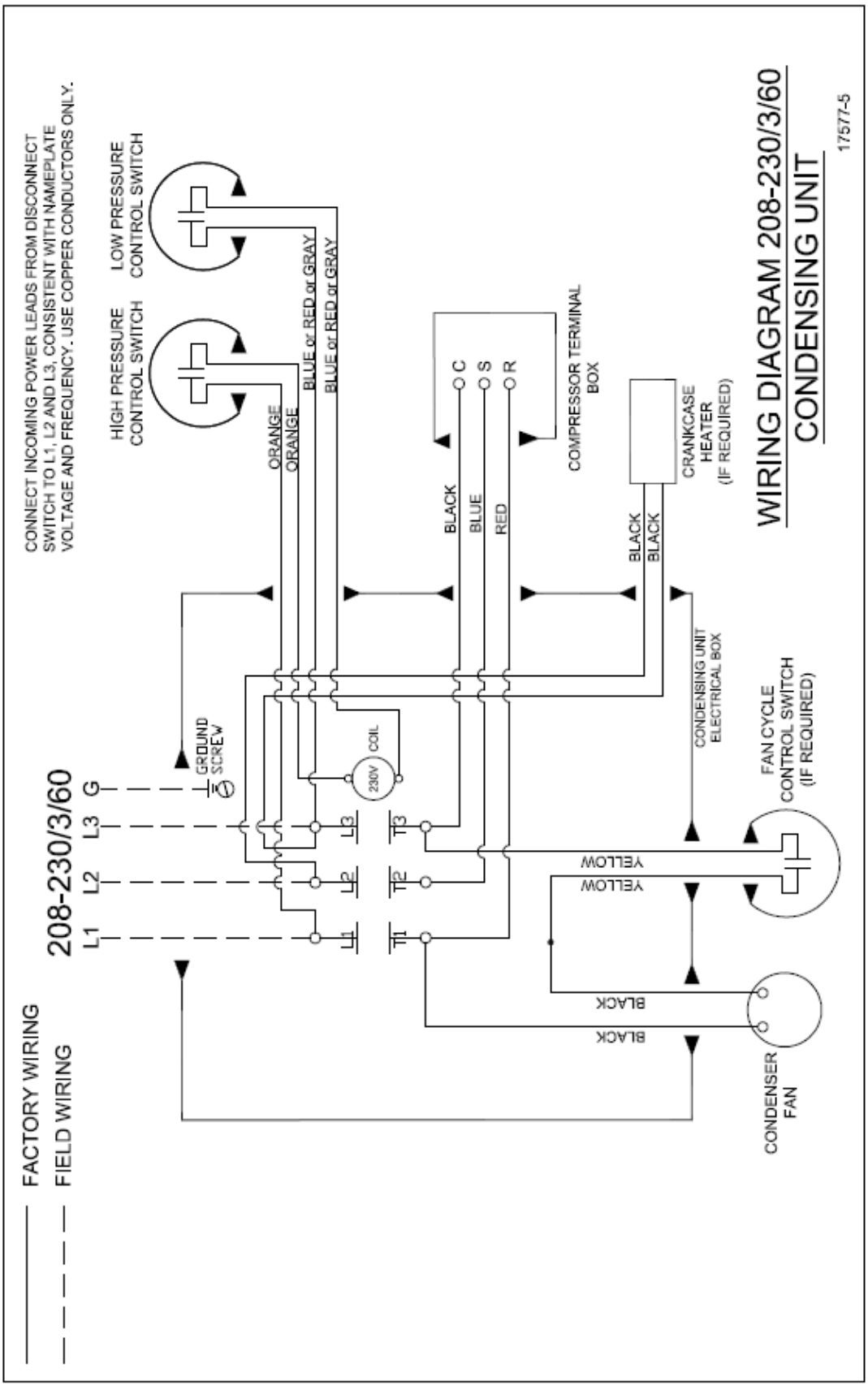
WIRING DIAGRAM 208-230/3/60
CONDENSING UNIT
17577-5
208-230/3/60
L1 L2 L3 G
FACTORY WIRING
FIELD WIRING
CONNECT INCOMING POWER LEADS FROM DISCONNECT SWITCH TO L1, L2 AND L3, CONSISTENT WITH NAMEPLATE VOLTAGE AND FREQUENCY. USE COPPER CONDUCTORS ONLY.
HIGH PRESSURE CONTROL SWITCH
LOW PRESSURE CONTROL SWITCH
ORANGE
ORANGE
BLUE or RED or GRAY
BLUE or RED or GRAY
GROUND SCREW
COIL
230V
L1
L2
L3
T1
T2
T3
C
S
R
BLACK
BLUE
RED
COMPRESSOR TERMINAL BOX
BLACK
BLACK
CRANKCASE HEATER (IF REQUIRED)
CONDENSING UNIT ELECTRICAL BOX
FAN CYCLE CONTROL SWITCH (IF REQUIRED)
YELLOW
YELLOW
BLACK
BLACK
CONDENSER FAN

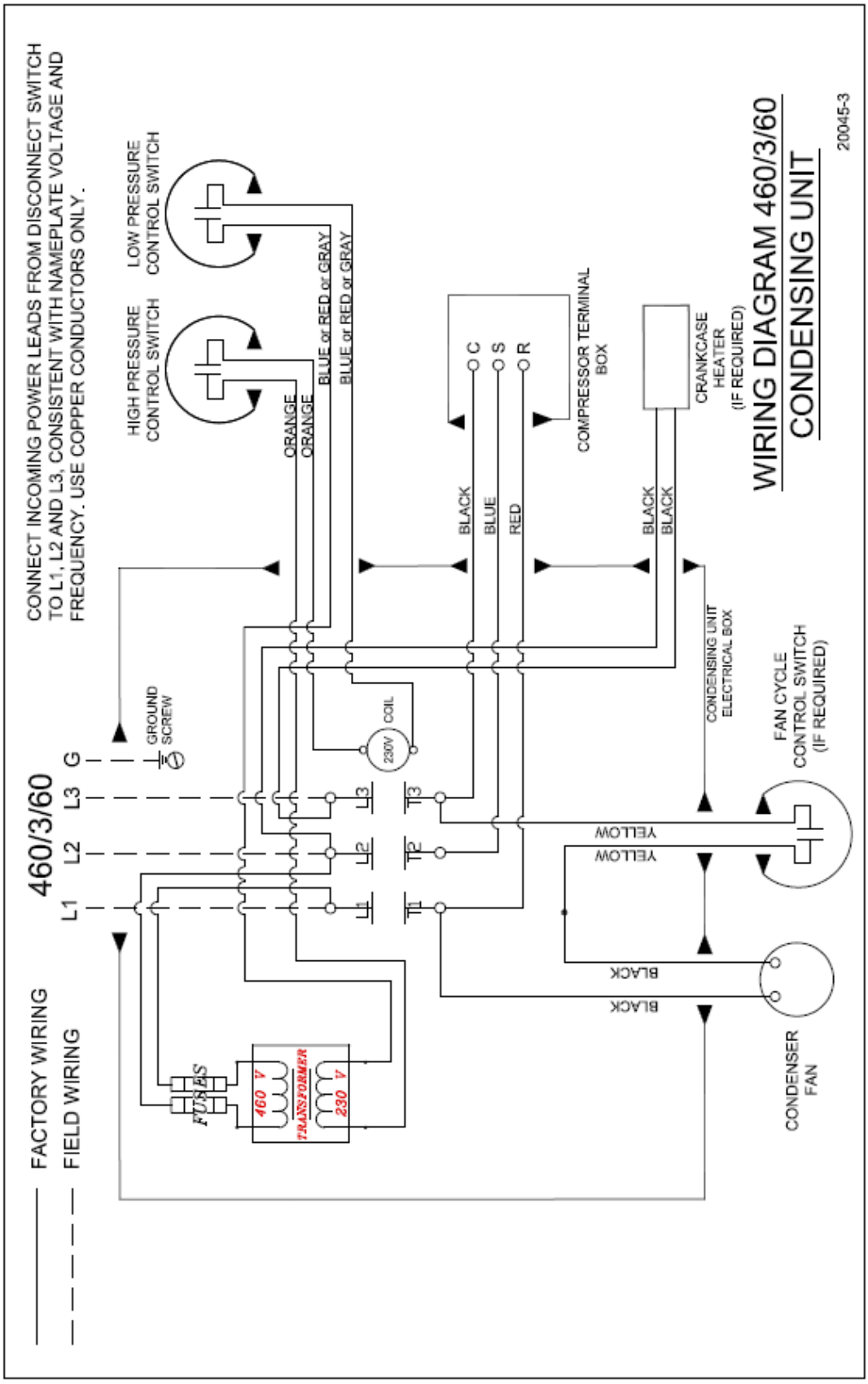
WIRING DIAGRAM 460/3/60
CONDENSING UNIT
20045-3
CONNECT INCOMING POWER LEADS FROM DISCONNECT SWITCH TO L1, L2 AND L3, CONSISTENT WITH NAMEPLATE VOLTAGE AND FREQUENCY. USE COPPER CONDUCTORS ONLY.
FACTORY WIRING
FIELD WIRING
460/3/60
L1
L2
L3
G
GROUND SCREW
HIGH PRESSURE CONTROL SWITCH
LOW PRESSURE CONTROL SWITCH
ORANGE
ORANGE
BLUE or RED or GRAY
BLUE or RED or GRAY
COIL
230V
C
S
R
COMPRESSOR TERMINAL BOX
BLACK
BLUE
RED
CRANKCASE HEATER (IF REQUIRED)
BLACK
BLACK
CONDENSING UNIT ELECTRICAL BOX
FAN CYCLE CONTROL SWITCH (IF REQUIRED)
YELLOW
YELLOW
BLACK
BLACK
CONDENSER FAN
FUSES
460 V
TRANSFORMER
230 V

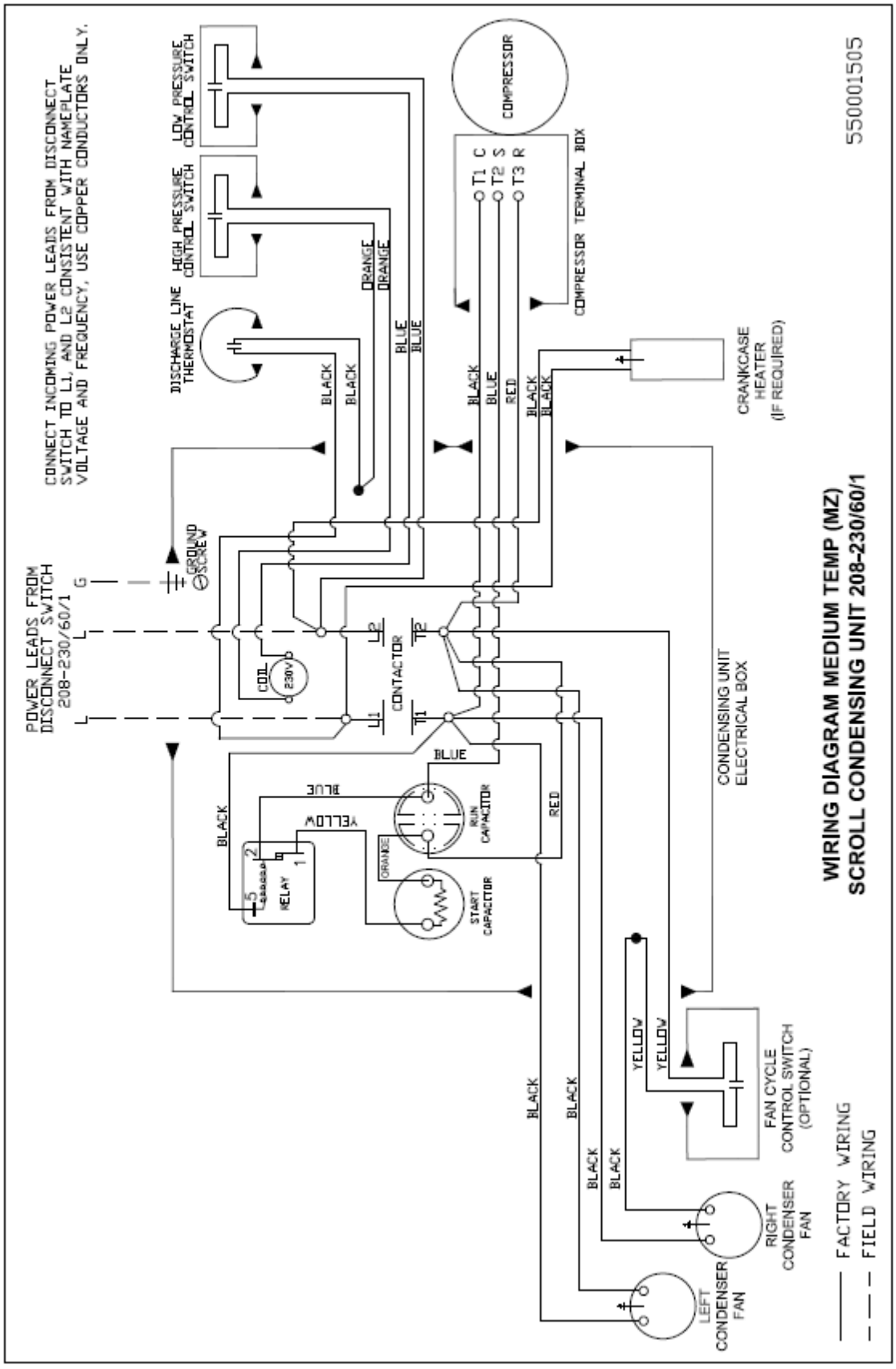
WIRING DIAGRAM MEDIUM TEMP (MZ)
SCROLL CONDENSING UNIT 208-230/60/1
550001505
CONNECT INCOMING POWER LEADS FROM DISCONNECT SWITCH TO L1, AND L2 CONSISTENT WITH NAMEPLATE VOLTAGE AND FREQUENCY, USE COPPER CONDUCTORS ONLY.
POWER LEADS FROM DISCONNECT SWITCH 208-230/60/1
L
G
GROUND SCREW
COMPRESSOR
T1 C
T2 S
T3 R
COMPRESSOR TERMINAL BOX
LOW PRESSURE CONTROL SWITCH
HIGH PRESSURE CONTROL SWITCH
DISCHARGE LINE THERMOSTAT
CRANKCASE HEATER (IF REQUIRED)
CONTACTOR
COIL
230V
L2
T2
L1
T1
RUN CAPACITOR
START CAPACITOR
RELAY
CONDENSING UNIT ELECTRICAL BOX
FAN CYCLE CONTROL SWITCH (OPTIONAL)
LEFT CONDENSER FAN
RIGHT CONDENSER FAN
BLACK
BLUE
RED
YELLOW
ORANGE
FACTORY WIRING
FIELD WIRING

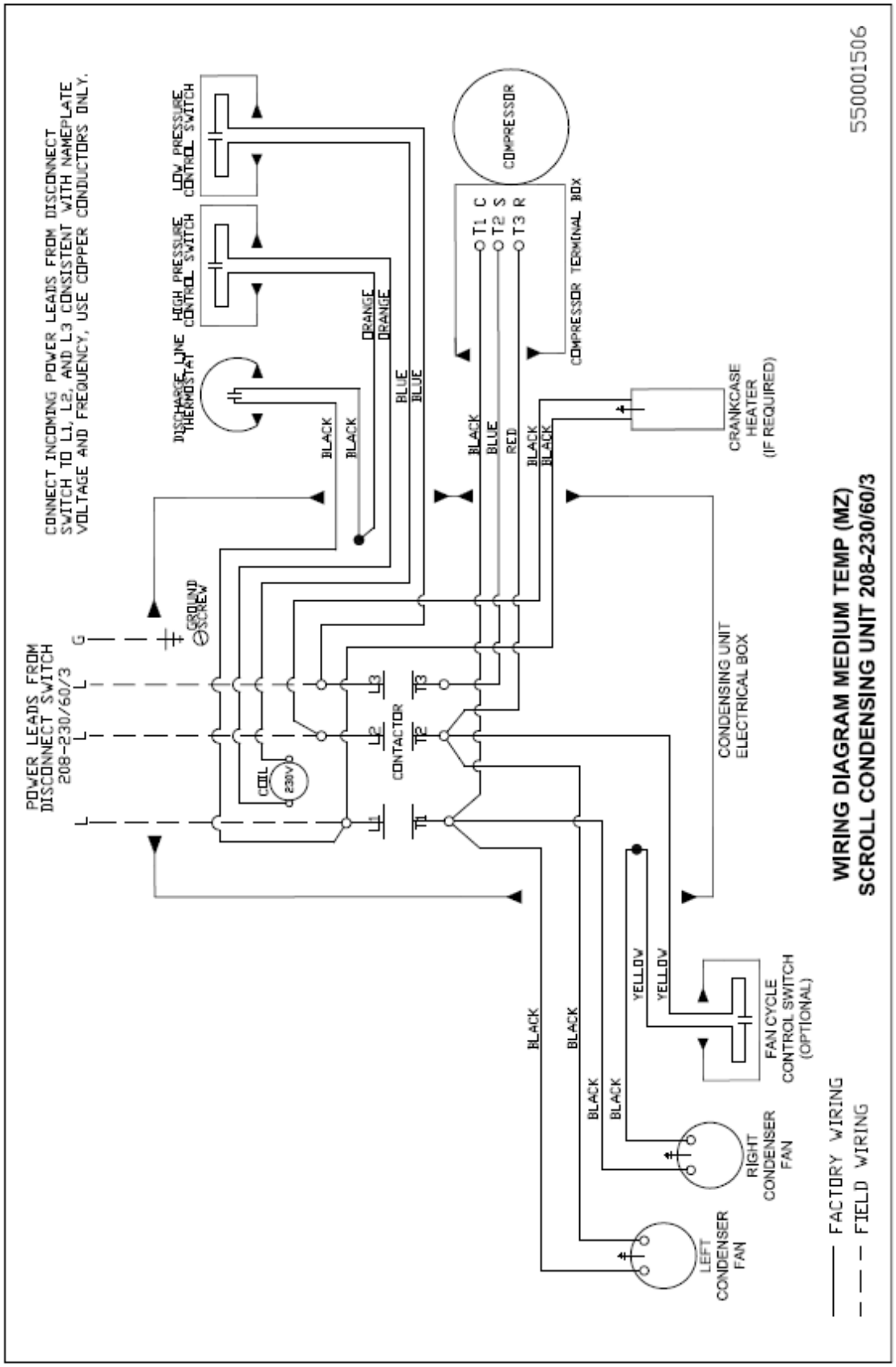
WIRING DIAGRAM MEDIUM TEMP (MZ)
SCROLL CONDENSING UNIT 208-230/60/3
550001506
CONNECT INCOMING POWER LEADS FROM DISCONNECT SWITCH TO L1, L2, AND L3 CONSISTENT WITH NAMEPLATE VOLTAGE AND FREQUENCY, USE COPPER CONDUCTORS ONLY.
POWER LEADS FROM DISCONNECT SWITCH 208-230/60/3
G
L
L
L
GROUND SCREW
COIL
230V
CONTACTOR
L1
L2
L3
T1
T2
T3
DISCHARGE LINE THERMOSTAT
HIGH PRESSURE CONTROL SWITCH
LOW PRESSURE CONTROL SWITCH
COMPRESSOR
T1 C
T2 S
T3 R
COMPRESSOR TERMINAL BOX
CRANKCASE HEATER (IF REQUIRED)
CONDENSING UNIT ELECTRICAL BOX
BLACK
BLUE
RED
ORANGE
YELLOW
FAN CYCLE CONTROL SWITCH (OPTIONAL)
RIGHT CONDENSER FAN
LEFT CONDENSER FAN
FACTORY WIRING
FIELD WIRING

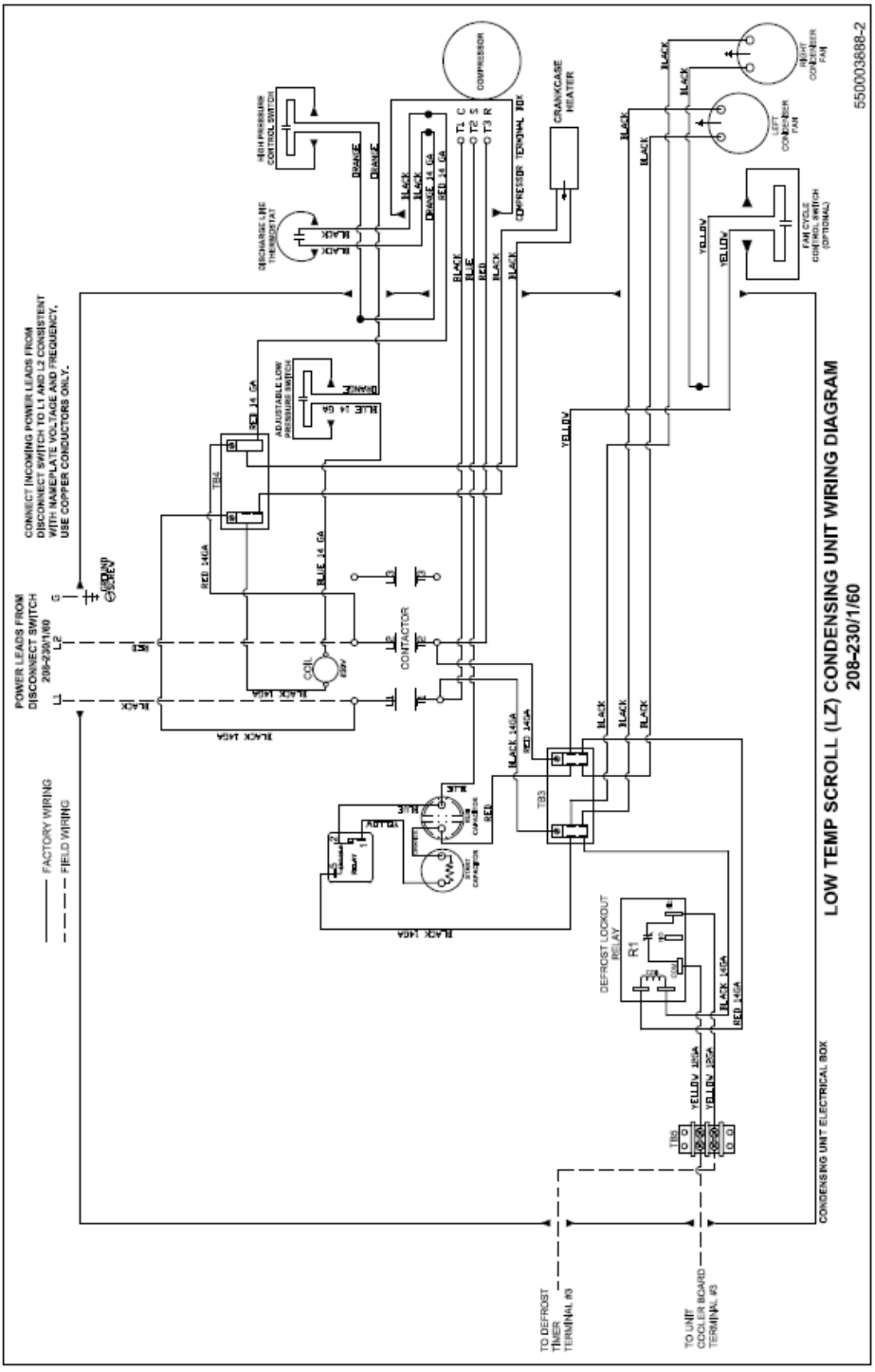
LOW TEMP SCROLL (LZ) CONDENSING UNIT WIRING DIAGRAM
208-230/1/60
5500038688-2
CONDENSING UNIT ELECTRICAL BOX
POWER LEADS FROM DISCONNECT SWITCH 208-230/1/60
CONNECT INCOMING POWER LEADS FROM DISCONNECT SWITCH TO L1 AND L2 CONSISTENT WITH NAMEPLATE VOLTAGE AND FREQUENCY. USE COPPER CONDUCTORS ONLY.
FACTORY WIRING
FIELD WIRING
CONTACTOR
COIL
COMPRESSOR TERMINAL BOX
COMPRESSOR
CRANKCASE HEATER
DISCHARGE LINE THERMOSTAT
HIGH PRESSURE CONTROL SWITCH
ADJUSTABLE LOW PRESSURE SWITCH
FAN CYCLE CONTROL SWITCH (OPTIONAL)
RIGHT CONDENSER FAN
LEFT CONDENSER FAN
DEFROST LOCKOUT RELAY
R1
TO DEFROST TIMER TERMINAL #3
TO UNIT COOLER BOARD TERMINAL #3

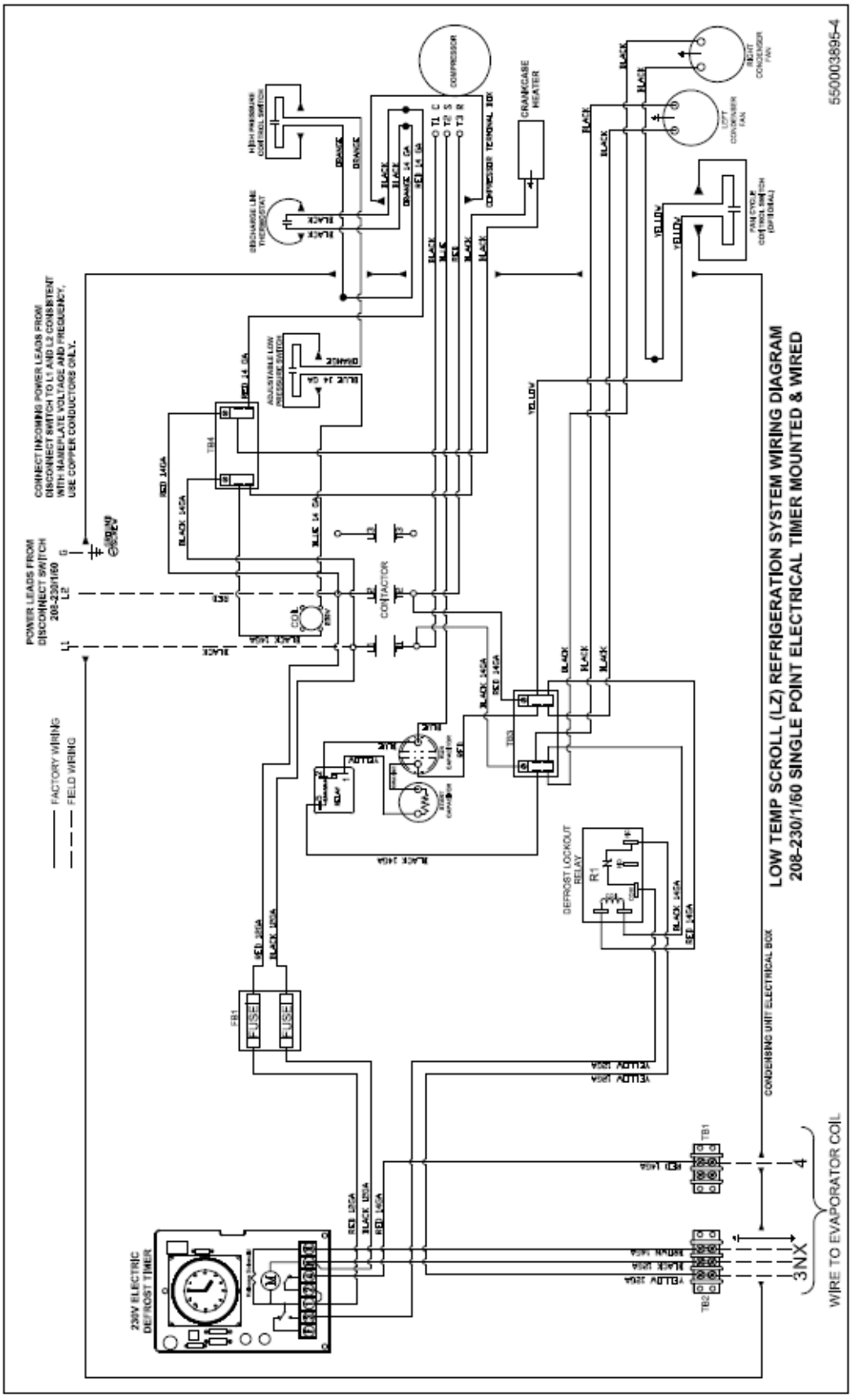
LOW TEMP SCROLL (LZ) REFRIGERATION SYSTEM WIRING DIAGRAM
208-230/1/60 SINGLE POINT ELECTRICAL TIMER MOUNTED & WIRED
550003895-4
CONNECT INCOMING POWER LEADS FROM DISCONNECT SWITCH TO L1 AND L2 CONSISTENT WITH NAMEPLATE VOLTAGE AND FREQUENCY. USE COPPER CONDUCTORS ONLY.
POWER LEADS FROM DISCONNECT SWITCH 208-230/1/60
FACTORY WIRING
FIELD WIRING
230V ELECTRIC DEFROST TIMER
CONTACTOR
COIL
FUSE
FUSE
DEFROST LOCKOUT RELAY
CONDENSING UNIT ELECTRICAL BOX
WIRE TO EVAPORATOR COIL
CRANKCASE HEATER
COMPRESSOR
COMPRESSOR TERMINAL BOX
HIGH PRESSURE CONTROL SWITCH
DISCHARGE LINE THERMOSTAT
ADJUSTABLE LOW PRESSURE SWITCH
FAN CYCLE CONTROL SWITCH (OPTIONAL)
LEFT CONDENSER FAN
RIGHT CONDENSER FAN
TB1
TB2
TB3
TB4
FB1
R1
3NX
4

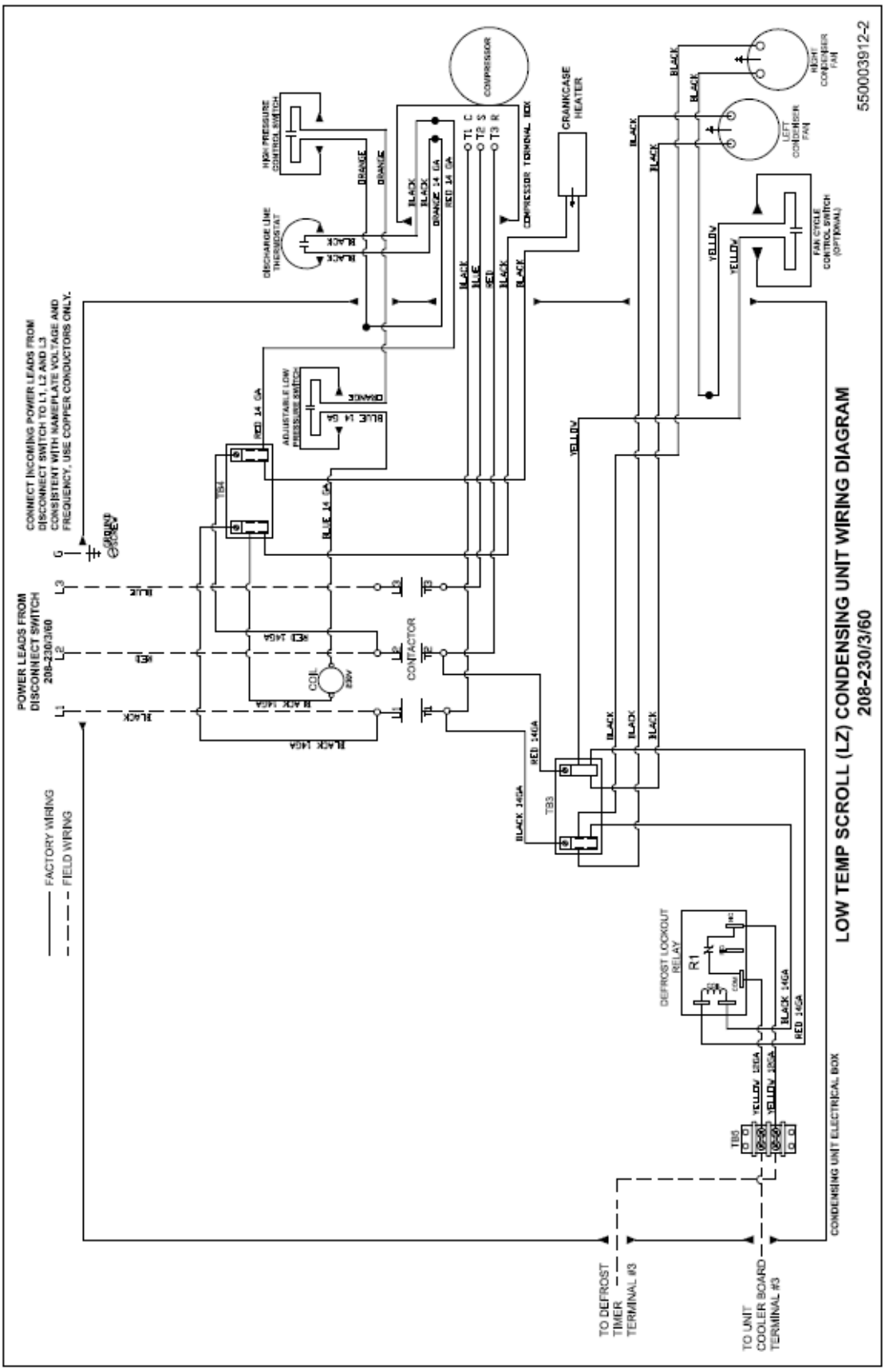
LOW TEMP SCROLL (LZ) CONDENSING UNIT WIRING DIAGRAM
208-230/3/60
5500039912-2
CONDENSING UNIT ELECTRICAL BOX
FACTORY WIRING
FIELD WIRING
POWER LEADS FROM DISCONNECT SWITCH 208-230/3/60
CONNECT INCOMING POWER LEADS FROM DISCONNECT SWITCH TO L1, L2 AND L3 CONSISTENT WITH NAMEPLATE VOLTAGE AND FREQUENCY. USE COPPER CONDUCTORS ONLY.
CONTACTOR
COIL
DEFROST LOCKOUT RELAY
R1
CRANKCASE HEATER
COMPRESSOR
COMPRESSOR TERMINAL BOX
HIGH PRESSURE CONTROL SWITCH
DISCHARGE LINE THERMOSTAT
ADJUSTABLE LOW PRESSURE SWITCH
FAN CYCLE CONTROL SWITCH (OPTIONAL)
RIGHT CONDENSER FAN
LEFT CONDENSER FAN
TO DEFROST TIMER TERMINAL #3
TO UNIT COOLER BOARD TERMINAL #3

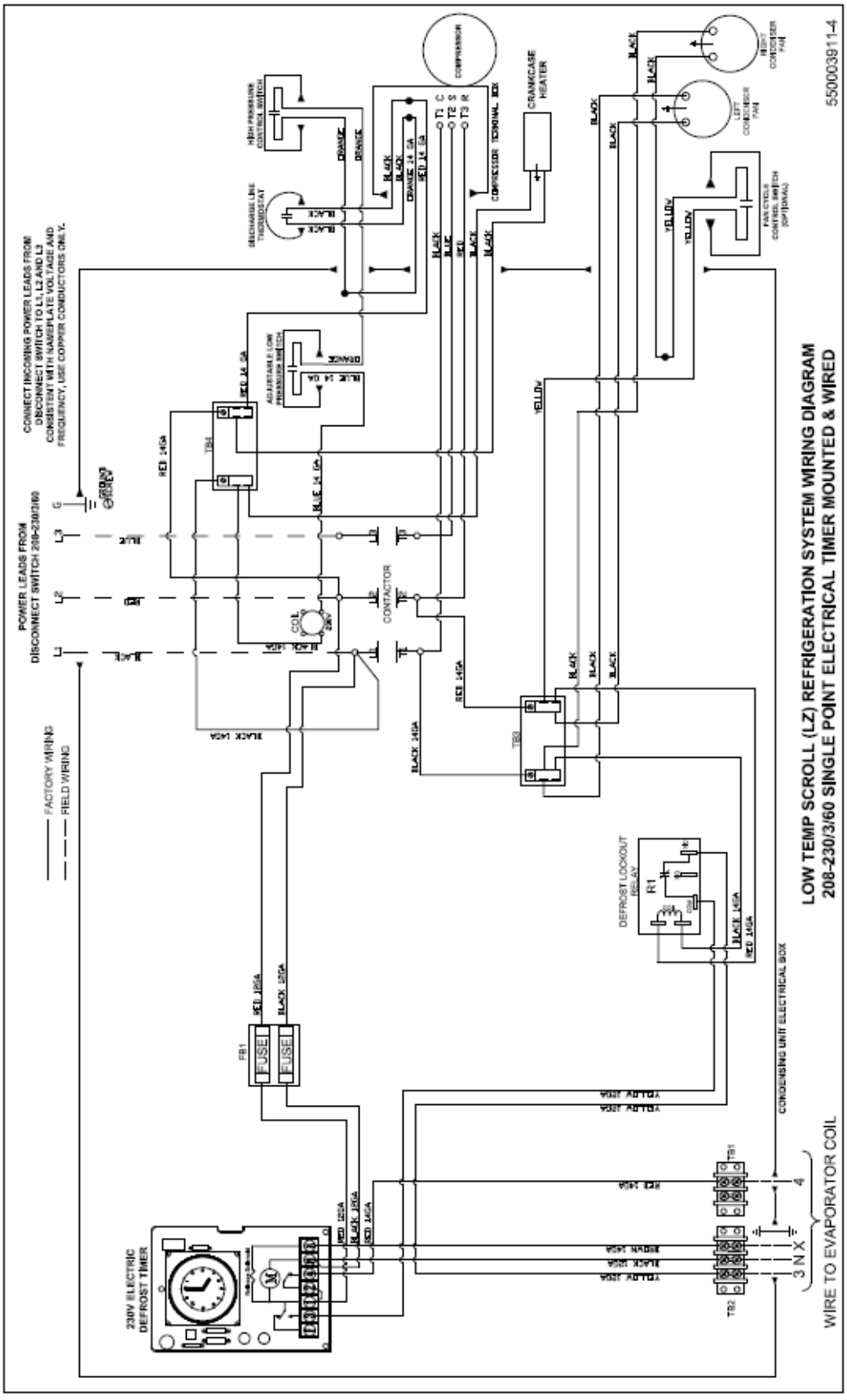
LOW TEMP SCROLL (LZ) REFRIGERATION SYSTEM WIRING DIAGRAM
208-230/3/60 SINGLE POINT ELECTRICAL TIMER MOUNTED & WIRED
WIRE TO EVAPORATOR COIL
CONDENSING UNIT ELECTRICAL BOX
FACTORY WIRING
FIELD WIRING
POWER LEADS FROM DISCONNECT SWITCH 208-230/3/60
CONNECT INCOMING POWER LEADS FROM DISCONNECT SWITCH TO L1, L2 AND L3 CONSISTENT WITH NAMEPLATE VOLTAGE AND FREQUENCY, USE COPPER CONDUCTORS ONLY.
CONTACTOR
COIL
COMPRESSOR
CRANKCASE HEATER
LEFT CONDENSER FAN
RIGHT CONDENSER FAN
FAN CYCLE CONTROL SWITCH (OPTIONAL)
HIGH PRESSURE CONTROL SWITCH
DISCHARGE LINE THERMOSTAT
ADJUSTABLE LOW PRESSURE SWITCH
DEFROST LOCKOUT RELAY
230V ELECTRIC DEFROST TIMER
FUSE
FUSE
3 N X 4
5500039111-4

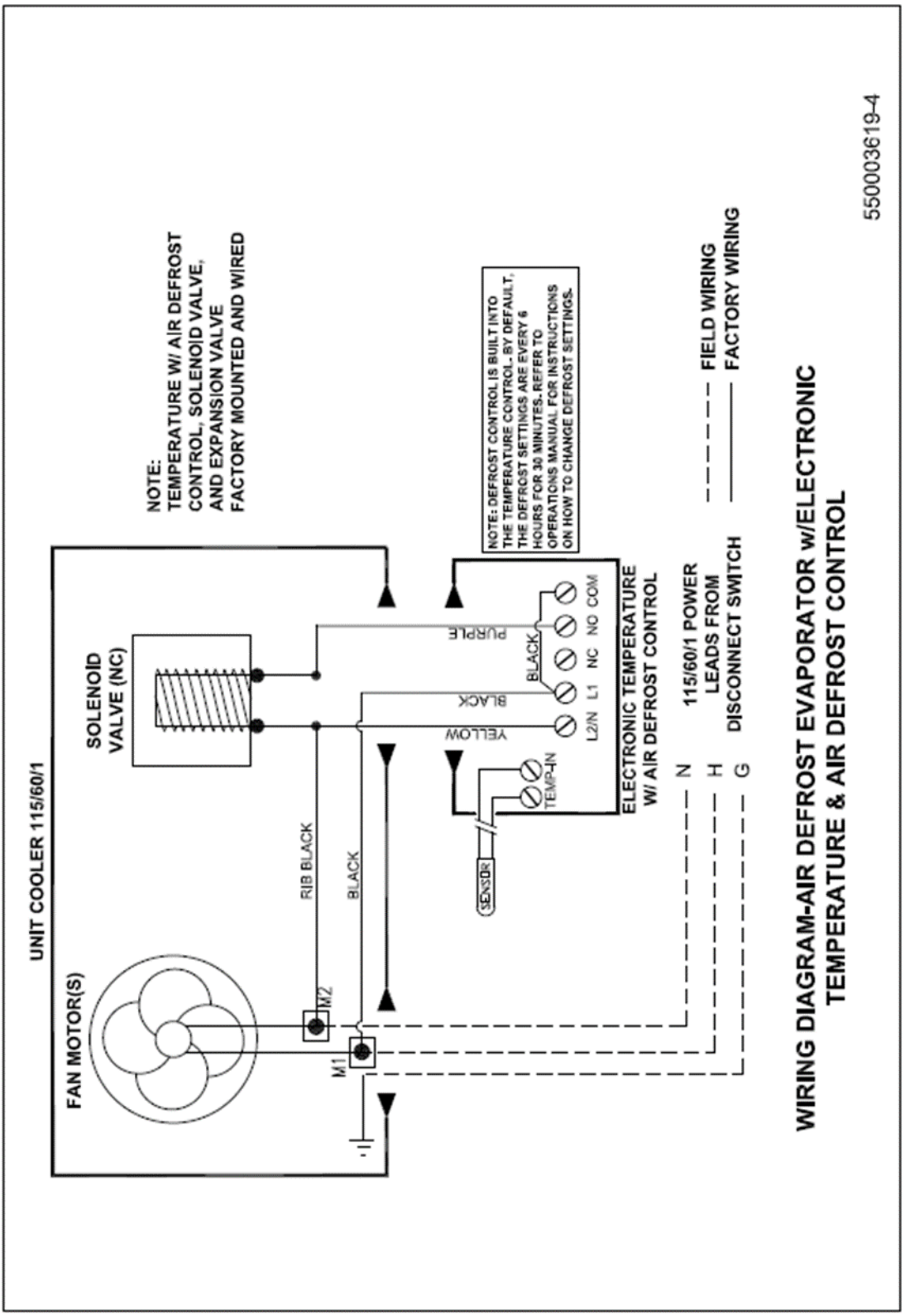
WIRING DIAGRAM-AIR DEFROST EVAPORATOR w/ELECTRONIC
TEMPERATURE & AIR DEFROST CONTROL
5500036194
UNIT COOLER 115/60/1
FAN MOTOR(S)
SOLENOID
VALVE (NC)
NOTE:
TEMPERATURE W/ AIR DEFROST
CONTROL, SOLENOID VALVE,
AND EXPANSION VALVE
FACTORY MOUNTED AND WIRED
NOTE: DEFROST CONTROL IS BUILT INTO
THE TEMPERATURE CONTROL. BY DEFAULT,
THE DEFROST SETTINGS ARE EVERY 6
HOURS FOR 30 MINUTES. REFER TO
OPERATIONS MANUAL FOR INSTRUCTIONS
ON HOW TO CHANGE DEFROST SETTINGS.
ELECTRONIC TEMPERATURE
W/ AIR DEFROST CONTROL
115/60/1 POWER
LEADS FROM
DISCONNECT SWITCH
FIELD WIRING
FACTORY WIRING
N
H
G
L2/N L1 NC NO COM
PURPLE
BLACK
YELLOW
TEMP-IN
SENSOR
RIB BLACK
BLACK
M2
M1

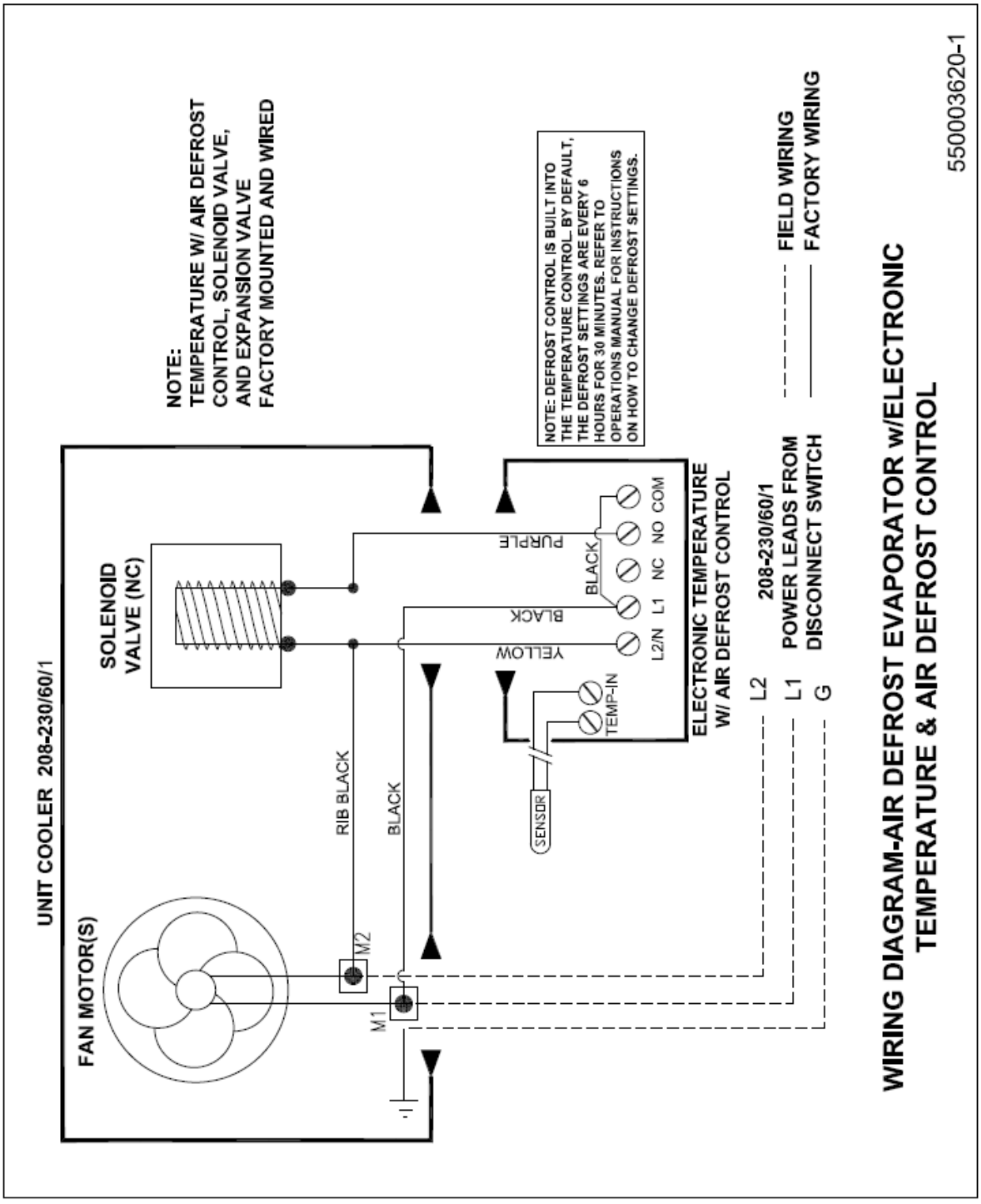
WIRING DIAGRAM-AIR DEFROST EVAPORATOR w/ELECTRONIC TEMPERATURE & AIR DEFROST CONTROL
550003620-1
UNIT COOLER 208-230/60/1
FAN MOTOR(S)
SOLENOID VALVE (NC)
NOTE:
TEMPERATURE W/ AIR DEFROST CONTROL, SOLENOID VALVE, AND EXPANSION VALVE FACTORY MOUNTED AND WIRED
NOTE: DEFROST CONTROL IS BUILT INTO THE TEMPERATURE CONTROL. BY DEFAULT, THE DEFROST SETTINGS ARE EVERY 6 HOURS FOR 30 MINUTES. REFER TO OPERATIONS MANUAL FOR INSTRUCTIONS ON HOW TO CHANGE DEFROST SETTINGS.
ELECTRONIC TEMPERATURE W/ AIR DEFROST CONTROL
L2/N L1 NC NO COM
PURPLE
BLACK
YELLOW
TEMP-IN
SENSOR
RIB BLACK
BLACK
M1
M2
208-230/60/1
POWER LEADS FROM DISCONNECT SWITCH
L2
L1
G
FIELD WIRING
FACTORY WIRING

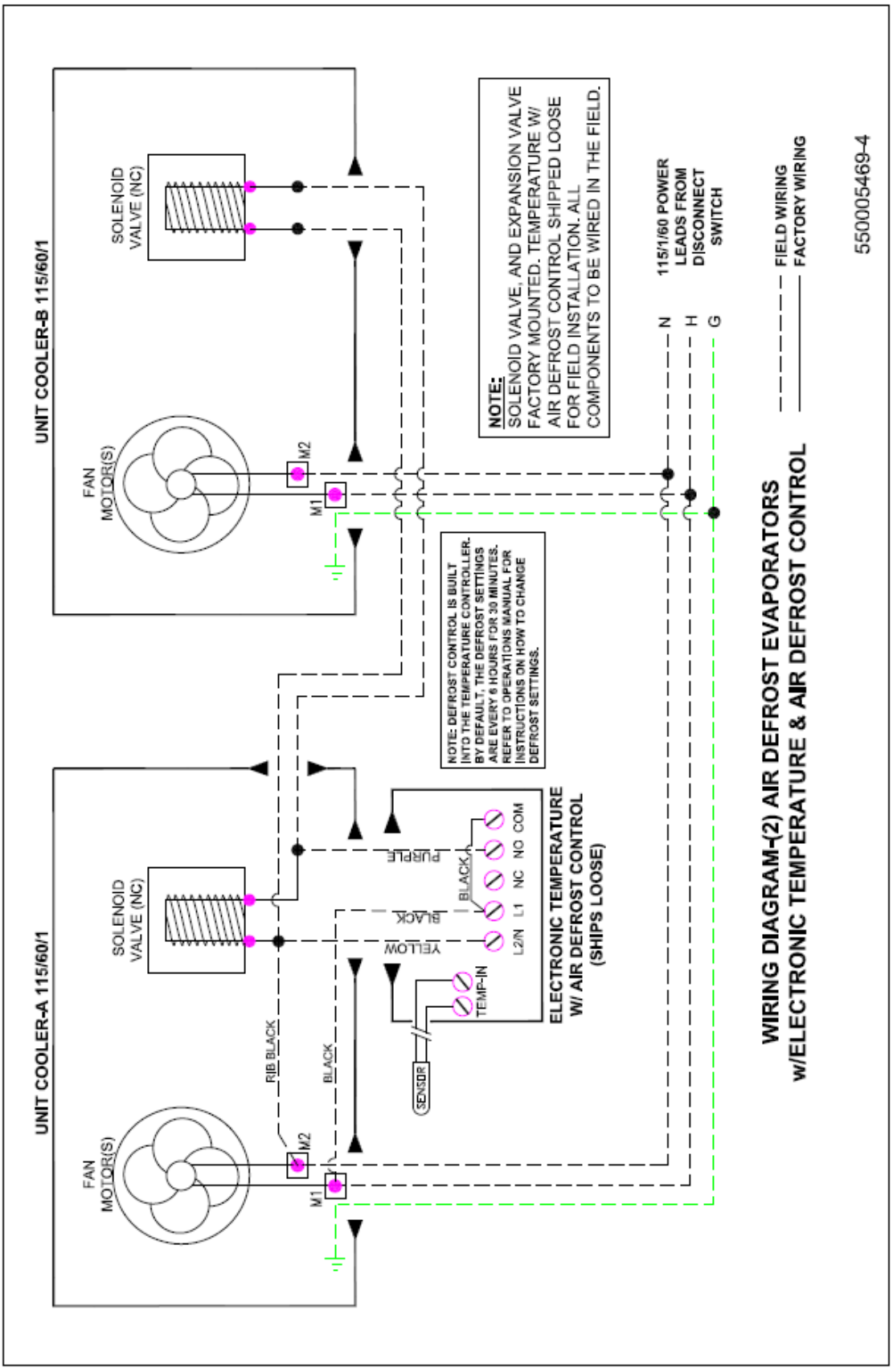
UNIT COOLER-B 115/60/1
SOLENOID VALVE (NC)
FAN MOTOR(S)
M2
M1
NOTE:
SOLENOID VALVE, AND EXPANSION VALVE FACTORY MOUNTED. TEMPERATURE W/ AIR DEFROST CONTROL SHIPPED LOOSE FOR FIELD INSTALLATION. ALL COMPONENTS TO BE WIRED IN THE FIELD.
N
H
G
115/1/60 POWER LEADS FROM DISCONNECT SWITCH
FIELD WIRING
FACTORY WIRING
NOTE: DEFROST CONTROL IS BUILT INTO THE TEMPERATURE CONTROLLER. BY DEFAULT, THE DEFROST SETTINGS ARE EVERY 6 HOURS FOR 30 MINUTES. REFER TO OPERATIONS MANUAL FOR INSTRUCTIONS ON HOW TO CHANGE DEFROST SETTINGS.
PURPLE
BLACK
BLACK
YELLOW
L2/N L1 NC NO COM
TEMP-IN
SENSOR
ELECTRONIC TEMPERATURE W/ AIR DEFROST CONTROL (SHIPS LOOSE)
UNIT COOLER-A 115/60/1
SOLENOID VALVE (NC)
FAN MOTOR(S)
M2
M1
RIB BLACK
BLACK
WIRING DIAGRAM-(2) AIR DEFROST EVAPORATORS w/ELECTRONIC TEMPERATURE & AIR DEFROST CONTROL
5500054694

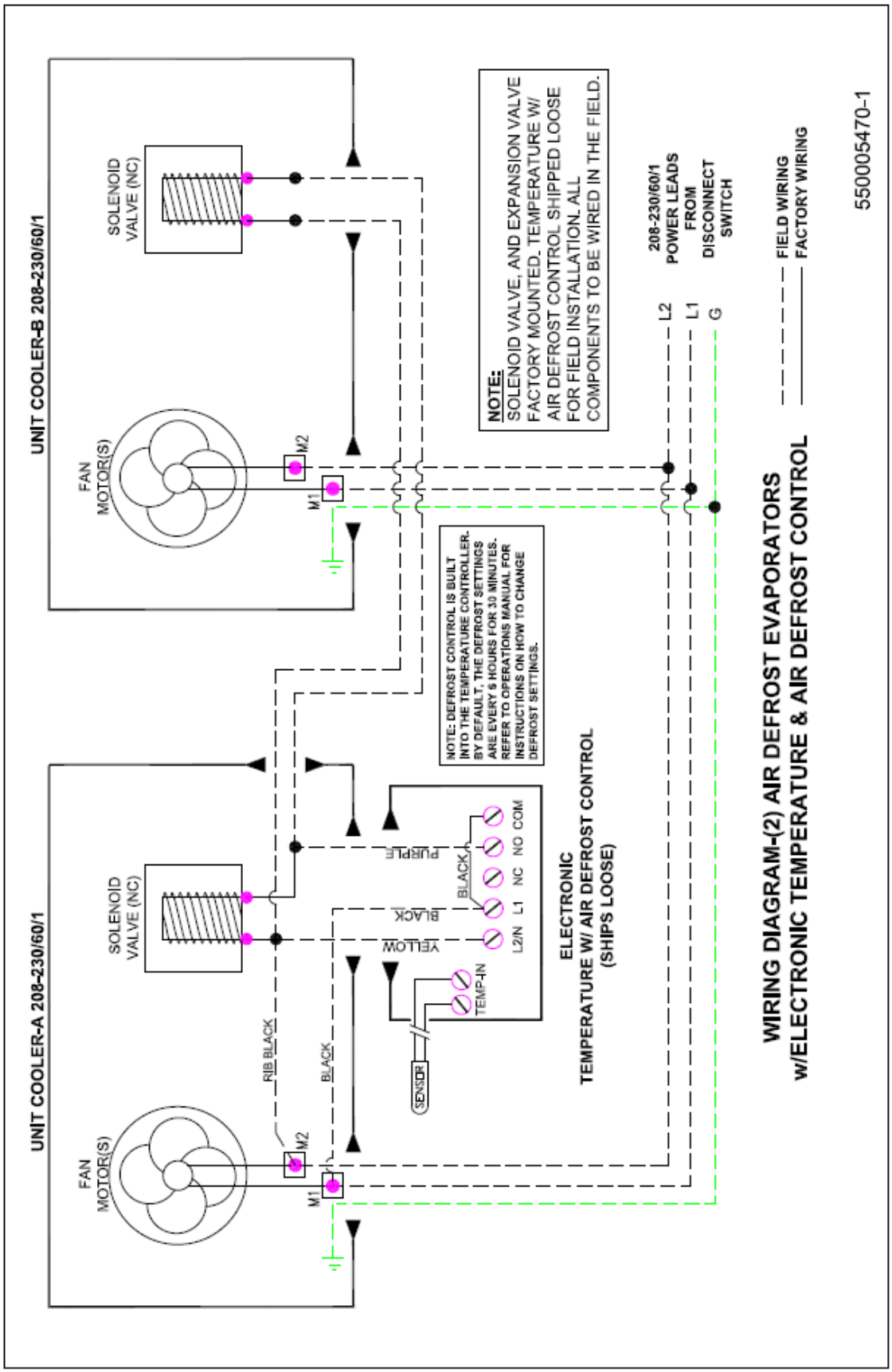
UNIT COOLER-B 208-230/60/1
SOLENOID VALVE (NC)
FAN MOTOR(S)
M2
M1
NOTE:
SOLENOID VALVE, AND EXPANSION VALVE FACTORY MOUNTED. TEMPERATURE W/ AIR DEFROST CONTROL SHIPPED LOOSE FOR FIELD INSTALLATION. ALL COMPONENTS TO BE WIRED IN THE FIELD.
208-230/60/1 POWER LEADS FROM DISCONNECT SWITCH
L2
L1
G
FIELD WIRING
FACTORY WIRING
NOTE: DEFROST CONTROL IS BUILT INTO THE TEMPERATURE CONTROLLER. BY DEFAULT, THE DEFROST SETTINGS ARE EVERY 6 HOURS FOR 30 MINUTES. REFER TO OPERATIONS MANUAL FOR INSTRUCTIONS ON HOW TO CHANGE DEFROST SETTINGS.
PURPLE
BLACK
BLACK
YELLOW
L2/N L1 NC NO COM
TEMP-IN
SENSOR
ELECTRONIC
TEMPERATURE W/ AIR DEFROST CONTROL
(SHIPS LOOSE)
RIB BLACK
BLACK
UNIT COOLER-A 208-230/60/1
SOLENOID VALVE (NC)
FAN MOTOR(S)
M2
M1
WIRING DIAGRAM-(2) AIR DEFROST EVAPORATORS
w/ELECTRONIC TEMPERATURE & AIR DEFROST CONTROL
550005470-1

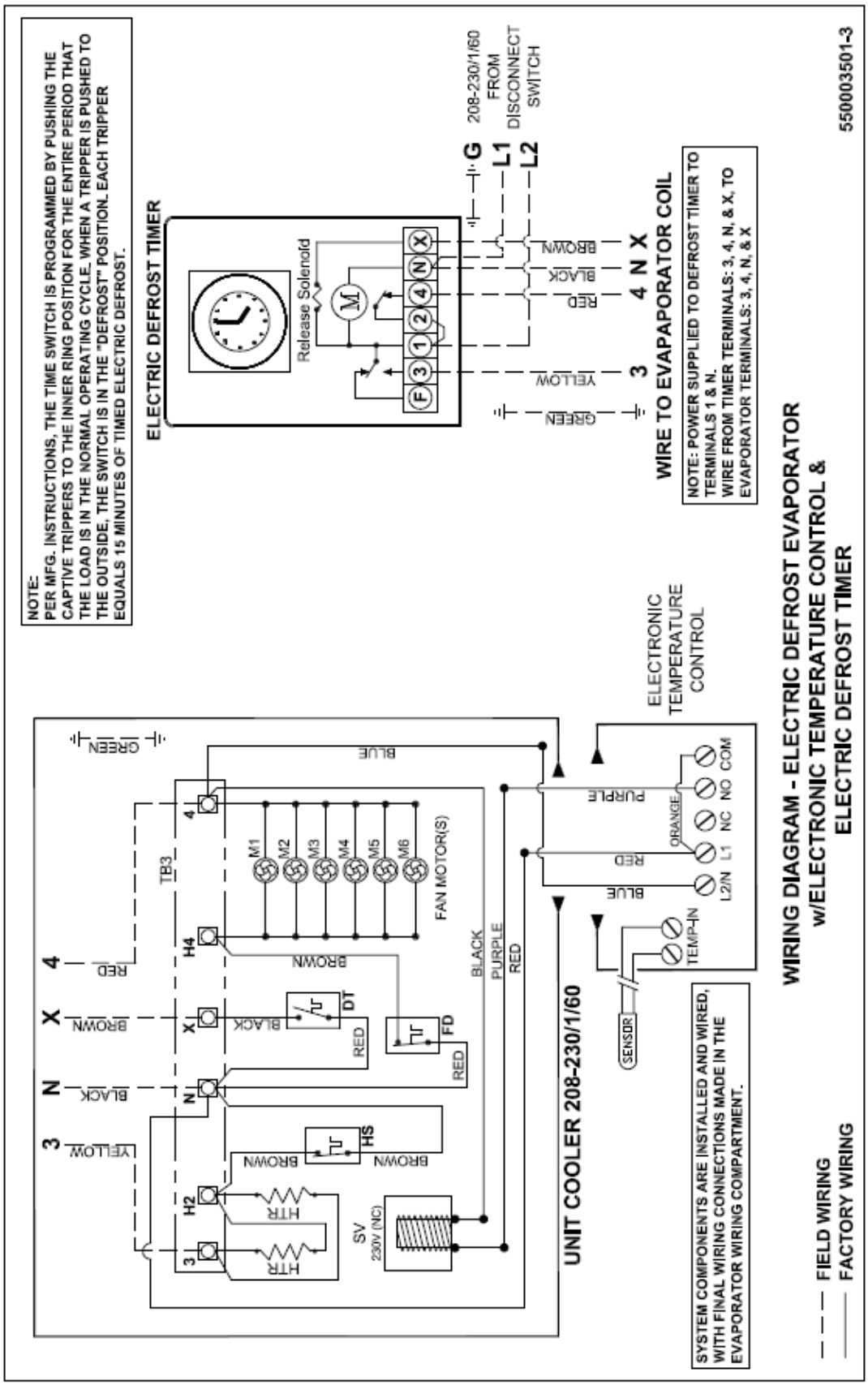
NOTE:
PER MFG. INSTRUCTIONS, THE TIME SWITCH IS PROGRAMMED BY PUSHING THE CAPTIVE TRIPPERS TO THE INNER RING POSITION FOR THE ENTIRE PERIOD THAT THE LOAD IS IN THE NORMAL OPERATING CYCLE. WHEN A TRIPPER IS PUSHED TO THE OUTSIDE, THE SWITCH IS IN THE "DEFROST" POSITION. EACH TRIPPER EQUALS 15 MINUTES OF TIMED ELECTRIC DEFROST.
ELECTRIC DEFROST TIMER
Release Solenoid
208-230/1/60 FROM DISCONNECT SWITCH
G
L1
L2
BROWN
BLACK
RED
YELLOW
GREEN
3
4 N X
WIRE TO EVAPAPORATOR COIL
NOTE: POWER SUPPLIED TO DEFROST TIMER TO TERMINALS 1 & N.
WIRE FROM TIMER TERMINALS: 3, 4, N, & X, TO EVAPORATOR TERMINALS: 3, 4, N, & X
ELECTRONIC TEMPERATURE CONTROL
PURPLE
ORANGE
RED
BLUE
L2/N
L1
NC
NO
COM
TEMP-IN
SENSOR
FAN MOTOR(S)
M1
M2
M3
M4
M5
M6
TB3
DT
FD
HS
HTR
SV
230V (NC)
UNIT COOLER 208-230/1/60
SYSTEM COMPONENTS ARE INSTALLED AND WIRED, WITH FINAL WIRING CONNECTIONS MADE IN THE EVAPORATOR WIRING COMPARTMENT.
FIELD WIRING
FACTORY WIRING
WIRING DIAGRAM - ELECTRIC DEFROST EVAPORATOR w/ELECTRONIC TEMPERATURE CONTROL & ELECTRIC DEFROST TIMER
550003501-3

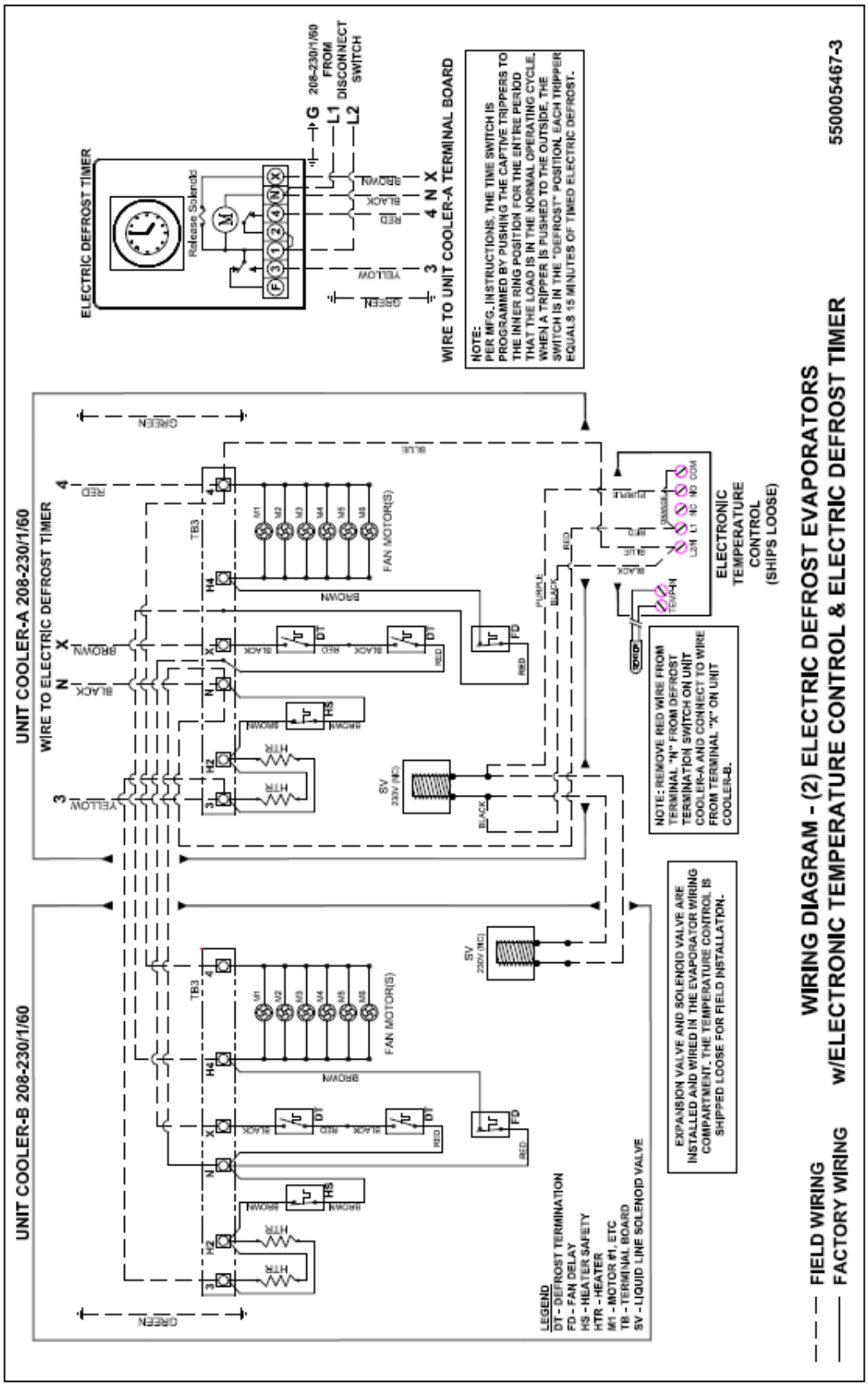
WIRING DIAGRAM - (2) ELECTRIC DEFROST EVAPORATORS
w/ELECTRONIC TEMPERATURE CONTROL & ELECTRIC DEFROST TIMER
5500054467-3
FIELD WIRING
FACTORY WIRING
ELECTRIC DEFROST TIMER
WIRE TO UNIT COOLER-A TERMINAL BOARD
208-230/1/60 FROM DISCONNECT SWITCH
NOTE: PER MFG. INSTRUCTIONS, THE TIME SWITCH IS PROGRAMMED BY PUSHING THE CAPTIVE TRIPPERS TO THE INNER RING POSITION FOR THE ENTIRE PERIOD THAT THE LOAD IS IN THE NORMAL OPERATING CYCLE. WHEN A TRIPPER IS PUSHED TO THE OUTSIDE, THE SWITCH IS IN THE "DEFROST" POSITION. EACH TRIPPER EQUALS 15 MINUTES OF TIMED ELECTRIC DEFROST.
UNIT COOLER-A 208-230/1/60
WIRE TO ELECTRIC DEFROST TIMER
UNIT COOLER-B 208-230/1/60
FAN MOTOR(S)
ELECTRONIC TEMPERATURE CONTROL (SHIPS LOOSE)
NOTE: REMOVE RED WIRE FROM TERMINAL "N" FROM DEFROST TERMINATION SWITCH ON UNIT COOLER-A AND CONNECT TO WIRE FROM TERMINAL "X" ON UNIT COOLER-B.
EXPANSION VALVE AND SOLENOID VALVE ARE INSTALLED AND WIRED IN THE EVAPORATOR WIRING COMPARTMENT. THE TEMPERATURE CONTROL IS SHIPPED LOOSE FOR FIELD INSTALLATION.
LEGEND
DT - DEFROST TERMINATION
FD - FAN DELAY
HS - HEATER SAFETY
HTR - HEATER
M1 - MOTOR #1, ETC
TB - TERMINAL BOARD
SV - LIQUID LINE SOLENOID VALVE

System Start-up Checklist

Date System Installed: _____/_____/_____
Installer and Address: _____

_____

Phone Number: (_____) _____-_____

Start-Up Service Agency: _____

_____

Phone Number: (_____) _____-_____

Freezer Condensing Unit				
Inspection Feature	**Data**	**Accept**	**Reject**	**Action Required**
Model Number:				
Serial Number:				
Electrical Volts:				
Electrical Phase:				
Amperage @ L1:				
Amperage @ L2:				
Amperage @ L3:				
Ambient Temp:	°F			
Comp. Discharge Pressure:	PSIG			
Comp. Suction Pressure:	PSIG			
Suction Line Temp @ Comp.:	°F			
Discharge Line Temp @ Comp.:	°F			
Comp. Superheat:	°F			
Defrost Setting (4 day/45 min):				
All electrical connections are tight:				
Unit base properly supported:				
Fans Running & No Vibration:				
All guards, covers attached:				
Refrigerant Sight Glass Clear:				
Comp. Oil Level @ ½ Sight Glass:				
Comp. Mounting Clips Removed:				
Suction line insulated fully and properly supported:				

Freezer Evaporator				
Inspection Feature	**Data**	**Accept**	**Reject**	**Action Required**
Evaporator installed with nylon bolts with proper airflow clearance:				
Model Number:				
Serial Number:				
Electrical Volts:				
Electrical Phase:				
Suction Line Temp @ Evap:	°F			
Evap Superheat:	°F			
Thermostat Set:	°F			
Operating Temp:	°F			
TXV Bulb Properly Mounted:				
All guards, covers attached:				
All electrical connections are tight:				
Defrost Heater Amp Draw:	A			

Freezer Piping				
Inspection Feature	**Data**	**Accept**	**Reject**	**Action Required**
Suction Lines Insulated:				
Oil Trap at Base of Suction Riser:				
Copper Drain Lines Sloped Min 1/2” ft:				
Piping Supported Every 5’:				
Copper drain line heater attached, working, and insulated:				
Copper Drain Line Trapped Outside Freezer Space:				

Cooler Condensing Unit				
Inspection Feature	**Data**	**Accept**	**Reject**	**Action Required**
Model Number:				
Serial Number:				
Electrical Volts:				
Electrical Phase:				
Amperage @ L1:				
Amperage @ L2:				
Amperage @ L3:				
Ambient Temp:	°F			
Comp. Discharge Pressure:	PSIG			
Comp. Suction Pressure:	PSIG			
Suction Line Temp @ Comp.:	°F			
Discharge Line Temp @ Comp.:	°F			
Comp. Superheat:	°F			
Defrost Setting (4 day/45 min):				
All electrical connections are tight:				
Unit base properly supported:				
Fans Running & No Vibration:				
All guards, covers attached:				
Refrigerant Sight Glass Clear:				
Comp. Oil Level @ ½ Sight Glass:				
Comp. Mounting Clips Removed:				
Suction line insulated fully and properly supported:				

Cooler Evaporator				
Inspection Feature	**Data**	**Accept**	**Reject**	**Action Required**
Evaporator installed with nylon bolts with proper airflow clearance:				
Model Number:				
Serial Number:				
Electrical Volts:				
Electrical Phase:				
Suction Line Temp @ Evap:	°F			
Evap Superheat:	°F			
Thermostat Set:	°F			
Operating Temp:	°F			
TXV Bulb Properly Mounted:				
All guards, covers attached:				
All electrical connections are tight:				

Cooler Piping				
Inspection Feature	**Data**	**Accept**	**Reject**	**Action Required**
Suction Lines Insulated:				
Oil Trap at Base of Suction Riser:				
Copper Drain Lines Sloped Min 1/2” ft:				
Copper Drain Lines Insulated:				
Copper Piping Supported Every 5’:				
Copper Drain Line Trapped Outside Cooler Space:				

Walk-In Freezer				
Inspection Feature	**Data**	**Accept**	**Reject**	**Action Required**
Serial Number:				
Interior Lights Installed and Working:				
All Penetrations Sealed:				
Doors/Jambs Squared and Operating Properly:				
All Panel Locks Fully Engaged:				
All Plug Buttons Installed:				
Door Heater Working:				
Door Sweeps Adjusted:				
Heat Air Vent Working:				
Door Closers Adjusted and Working:				
Wainscot and Trim Installed:				
Alarm Set and Working:				
Thermometer Bulb Mounted and Calibrated:				
Walk-In Clean (no excessive caulk, etc.)				
Walk-in at proper temperature:				

Walk-In Cooler				
Inspection Feature	**Data**	**Accept**	**Reject**	**Action Required**
Serial Number:				
Interior Lights Installed and Working:				
All Penetration Sealed:				
Doors/Jambs Squared and Operating Properly:				
All Panel Locks Fully Engaged:				
All Plug Buttons Installed:				
Door Heater Working:				
Door Sweeps Adjusted:				
Heat Air Vent Working:				
Door Closers Adjusted and Working:				
Wainscot and Trim Installed:				
Alarm Set and Working:				
Thermometer Bulb Mounted				

and Calibrated:				
Walk-In Clean (no excessive caulk, etc.)				
Walk-in at proper temperature:				

Notes:

Superintendent/Customer Signature: _____ **Date:** _____

Service Tech/Installer Signature: _____ **Date:** _____

Warranty Information

For information regarding warranty guidelines, claim form, product registration, warranty verification, or locating a service provider please visit our website at www.welbilt.com or call 1-800-225-9916.

Failure to follow the System Start-Up Checklist could create warranty issues in the future. Please follow, complete and return completed System Start Up Checklist forms to: KPR-Warranty@welbilt.com or fax to 1-731-847-5389.

This Page Left Intentionally Blank

This Page Intentionally Left Blank