S6 Countertop Steam&Hold™ Steamer

6 Pan, Electric, Vacuum Capable, Connectionless Steamer

Project: _____ Location: _____ Item #: _____ Quantity:_____

Standard Features

- Fast cook, low temp, steam and hold modes
- Super Duty heater configuration
- No water or drain line required
- No hood required (in most areas)
- 3 gallon water reservoir
- Heating element not exposed to water
- No deliming, descaling, or blowdowns
- No water quality exclusions to warranty
- Heavy duty door
- Low water protection with light and buzzer
- Heat, cook, and hold indicator lights
- Fast cook and thermostat mode selector switch
- Vacuum and temperature gauges
- Certified as a holding cabinet and UL listed
- 90 minute timer
- Right hand hinged door
- Quick release door—open door while cooking
- Patented vacuum technology for efficiency & faster cooking
- Continuous cook and hold mode settings on timer
- Power on/off switch
- Steamer cavity made of durable reinforced 14 ga. 304 stainless steel
- 5' power cord and plug included
- Front mounted drain valve
- Exclusive and patented low temperature steam cooking mode
- Multiple kilowatt outputs available to suit cooking needs
- One year parts and labor warranty
- Lifetime Service and Support Guarantee
- Steam Director covers water for added safety
- Field Reversible Door

Optional Features

- Door hinged on left
- Chain package—factory preset hold temperature; controls behind panel
- Military package
- Corrections package—tamper resistant
- Marine package
- Drain kit
- 4" adjustable bullet feet or flanged feet
- Stainless steel support stand with casters, bullet or flanged feet
- Double stacking stand conversion kit
- Perforated cooking shelf
- Water shield—covers water reservoir
- Steamer door crack open/hold open feature
- 4" full size (12x20x4") drain pan
- One year extended warranty

Safety, Sanitation & Environmental

NSF/ANSI 4

- EPA 202 Evaluated / NFPA 96 4.1.1.2 Compliant

Pan Capacities

Pan Size	Qty.
#200 full size (12x20x2.5")	6
#400 full size (12x20x4")	4

Short Spec

Steam&Hold™ steamer is AccuTemp Products patented vacuum technology steam cooker with 3 operating modes. Fast cook (212°F), low temperature steam mode (150–200°F) and certified variable temperature hold mode. Steam to be produced inside the cooking cavity with no heating element exposed to water. No water or drain line required. Unit to include heavy duty door which will open at any time during cooking cycle. Steamer to include low water indicator light and buzzer with auto shutdown feature. Unit to be UL, CE, and ENERGY STAR® qualified. Built in the USA.



S6 Countertop Steam&Hold™ Steam Cooker shown with optional 4" adjustable legs and 4" drain pan

AccuTemp product may be covered by one or more US Patents. See www.accutempip.net

AccuTemp Products, Inc.
800-210-5907 | accutemp.net

S6 Countertop Steam&Hold™ Steamer

6 Pan, Electric, Vacuum Capable, Connectionless Steamer

Steamer Model "D" Specifications								
Model #	S62081D060	S62401D060	S62083D100	S62403D110	S62403D130	S62083D150	S64403D120	S64803D140
Volts AC	208	240	208	208 | 240	240	208	440	480
Phase	1	1	3	3	3	3	3	3
Amps	29	25	28	22 | 26	32	42	16	17
Breaker Size	30 amp	30 amp	30 amp	30 amp	50 amp	50 amp	20 amp	20 amp
Watts	6kW	6kW	10kW	8kW | 11kW	13kW	15kW	12kW	14kW
NEMA Plug	L6-30P	L6-30P	L15-30P	L15-30P	15-50P	15-50P	L16-20P	L16-20P

Steamer Model "F" Specifications - CE Models ONLY				
Model #	S62301F070	S64005F110		
Volts AC	230	380	400	415
Phase	1	3	3	3
Amps	32	14	14	15
Breaker Size	40 amp	20 amp	20 amp	20 amp
Watts	7kW	9kW	10kW	11kW
IEC Plug	60309-2 2P/3W/6H 220-250V	60309-2 3P/5W/6H 220/380-240/415V		

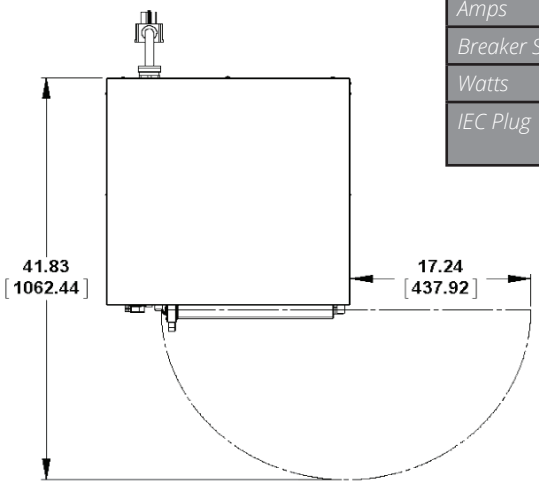

Notes:

1. Allow 3" between fryer, ranges, and other hot surfaces.
2. 5' power cord supplied with single or 3 phase.
3. For use on individual branch circuit only.
4. Do not connect to a circuit operating at more than 150V to ground.
5. Dimensions outside brackets are inches, in brackets are millimeters.
6. AccuTemp steamers can be placed on a commercial kitchen counter-top or installed on an AccuTemp steamer stand. Do not place directly onto any kind of heat source.

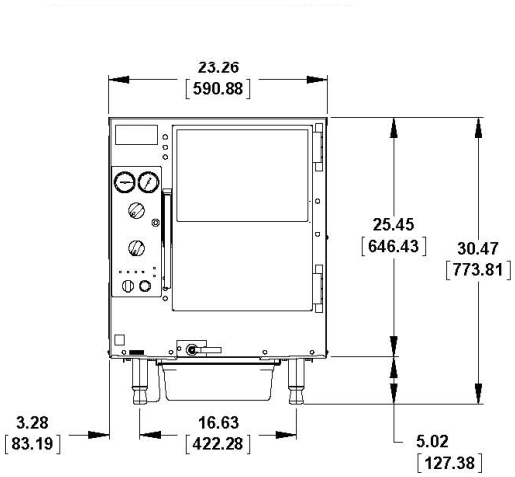

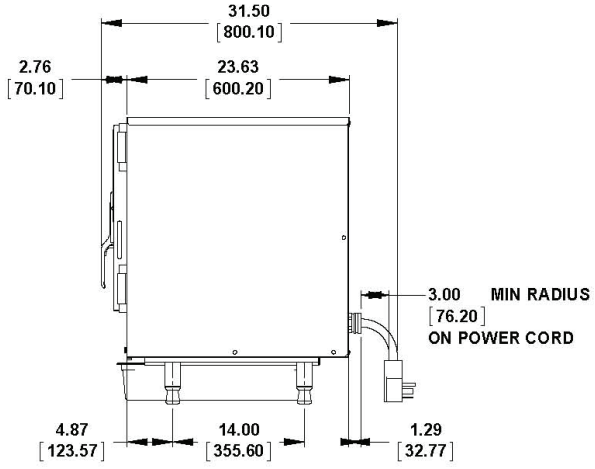

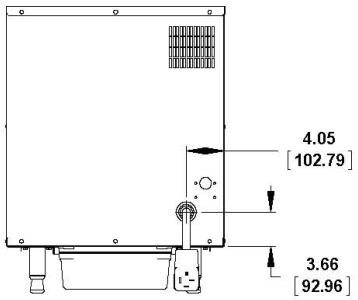

AccuTemp product may be covered by one or more US Patents. See www.accutempip.net

AccuTemp Products, Inc.
800-210-5907 | accutemp.net