AccuTemp
INNOVATIVE COOKING EQUIPMENT SOLUTIONS

EVOLUTION
BOILER-FREE STEAMER

E6 SGL CONNECTED EVOLUTION™
Stand-Mounted 6 Pan, Electric Boilerless Convection Steamer

Project: _____ Location: _____ Item #: _____ Quantity: _____

Standard Features

- Fast cook times with patent-pending Steam Vector Technology, which utilizes no moving parts
- Cook mode and Variable Hold Temperature mode
- Easy-to-use digital controls, with digital temperature display
- Independent digital electronic timer with programmable preset
- Simple water and drain connections
- No water filtration or treatment required
- No warranty exclusions for water quality
- Uses less than 1.5 gallons of water per hour
- Front-mounted drain valve
- No scheduled de-liming or maintenance
- Heavy-duty, field-reversible door
- Door can be opened at any time during cooking cycle
- Cast aluminum heating element is not exposed to water
- Multiple kW heat inputs available for all cooking needs
- Steamer cavity constructed of reinforced 14 ga. 304 stainless steel
- Easy-to-clean control panel
- Automatic altitude compensation
- Dishwasher-safe one-piece wire pan racks
- Dishwasher-safe SVT steam collector and distributor panels
- Dishwasher-safe front-mounted condensate tray
- English and Spanish operating instructions on door
- Simplified service access panel
- Low water, high water and overtemp indicator lights
- 5' power cord with plug included
- One year parts and labor warranty
- Lifetime Service & Support Guarantee
- UL LISTED Safety Certification (UL 197)
- UL EPH Sanitation Certification (NSF 4)
- Stainless steel support stand with casters, bullet feet or flanged feet

Optional Features

- Bullet Feet
- Perforated cooking shelf

Safety, Sanitation & Environmental

c UL us LISTED

NSF/ANSI 4

ENERGY STAR

- EPA 202 Evaluated / NFPA 96 4.1.1.2 Compliant

ECOLOGIX

U.S. GREEN BUILDING COUNCIL USGBC

MADE IN THE USA

Pan Capacities

Pan Size	Qty.
#200 full size (12x20x2.5")	6
#400 full size (12x20x4")	4

Short Spec

Evolution™ steamer is AccuTemp Products' connected, boilerless steam cooker that utilizes AccuTemp's Patent Pending Steam Vector Technology for faster cook times, improved energy efficiency, better pan to pan uniformity, and less water consumption. Steam Vector Technology requires no moving parts inside the cooking chamber. Steam to be produced inside the cooking cavity with no heating element exposed to water. Easily connects to water and drain line. Uses less than 1.5 gallons of water per hour. Unit to include low water, high water, overtemp warning lights and auto shut off feature. Evolution™ to include heavy duty, field reversible door.
Standard digital controls with independent timer. No water quality exclusions to warranty and no water filtration or treatment required. Unit to be UL Safety and Sanitation Certified, and Energy Star qualified. Built in USA.



Stand-Mounted E6 Evolution™

AccuTemp product may be covered by one or more US Patents. See www.accutempip.net

AccuTemp Products, Inc.
800-210-5907 | accutemp.net

AccuTemp
INNOVATIVE COOKING EQUIPMENT SOLUTIONS

EVOLUTION™
BOILER-FREE STEAMER

E6 SGL CONNECTED EVOLUTION™
Stand-Mounted 6 Pan, Electric Boilerless Convection Steamer

Steamer Model "E" Specifications SGL = ONE CAVITY ON STAND														
Model #	E62081E060 SGL	E62083E100 SGL	E62083E150 SGL	E62301E070 SGL	E62401E060 SGL	E62403E110 SGL		E62403E130 SGL	E64005E110 SGL			E64803E140 SGL		
Volts AC	208	208	208	230	240	208	240	240	380	400	415	440	480	
Phase	1	3	3	1	1	3		3	3			3		
Amps	29	28	42	32	25	22	26	32	14	14	15	16	17	
Breaker Size	30 amp	30 amp	50 amp	50 amp	30 amp	30 amp		50 amp	20 amp			20 amp		
Watts (kW)	6	10	15	7	6	8	11	13	9	10	11	12	14	
NEMA Plug	L6-30P	L15-30P	15-50P	IEC 60309-2 220/250V	L6-30P	L15-30P		15-50P	IEC 60309-2 220/380/240/415V			L16-20P		

Notes:

1. Allow 3" between fryer, ranges, and other hot surfaces.
2. 5' power cord supplied with single or 3 phase.
3. For use on individual branch circuit only.
4. Do not connect to a circuit operating at more than 150V to ground.
5. Dimensions outside brackets are inches, in brackets are millimeters.
6. Each unit equipped with 3/4" male garden hose connector
7. Each unit equipped with 3/4" barbed drain line connector
8. DO NOT plumb a single drain line between the 2 units. Each unit must have a separate drain line.

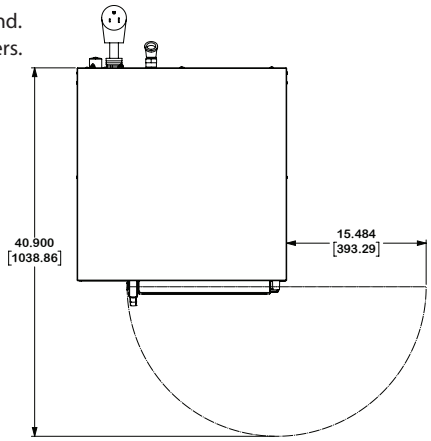

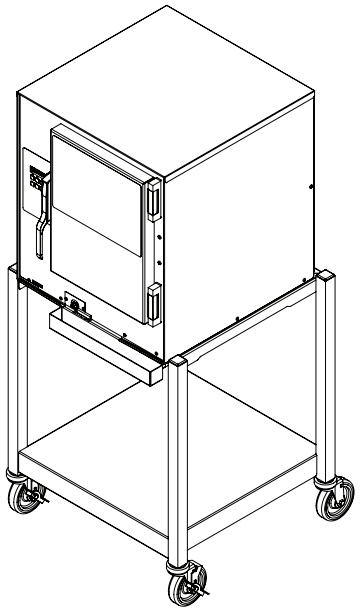

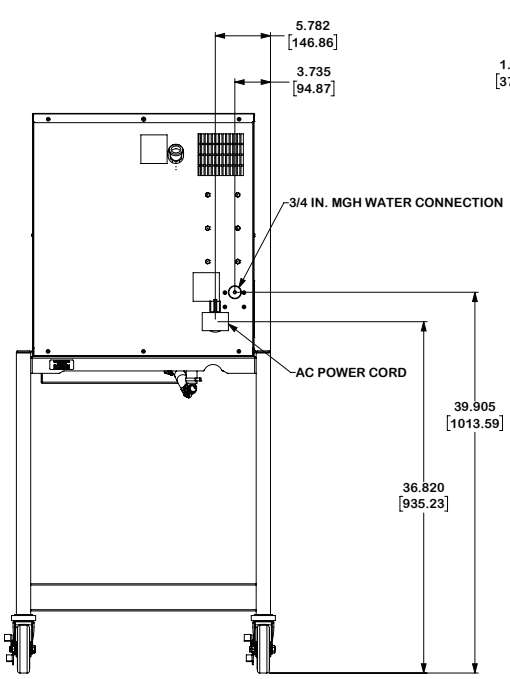

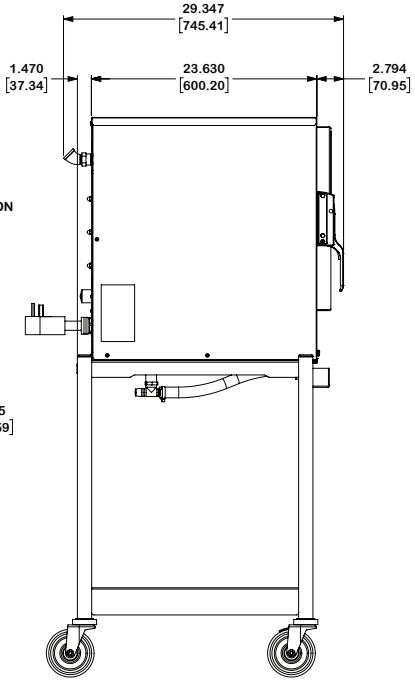

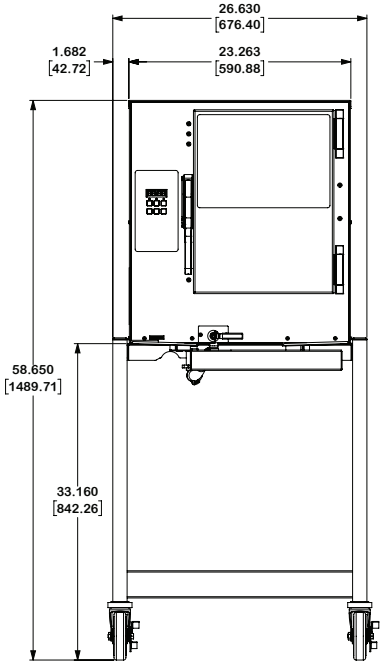

AccuTemp product may be covered by one or more US Patents. See www.accutempip.net