Gas Hoses
HG-2E-72K

TAG:

SAFE-T-LINK *Gas Hose*

Architect/Engineering Specifications:

72" coated gas appliance connector hose with 1" NPT male connections and installation kit. Certified to ANSI Z21.69 / CSA 6.16 and NSF 2.

Job Name_____
Model Specified_____Quantity_____
Variations Specified_____
Date_____

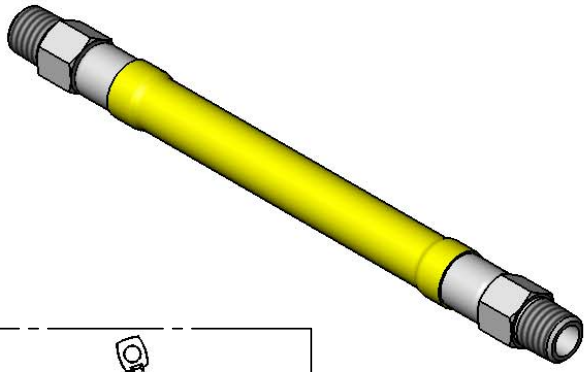

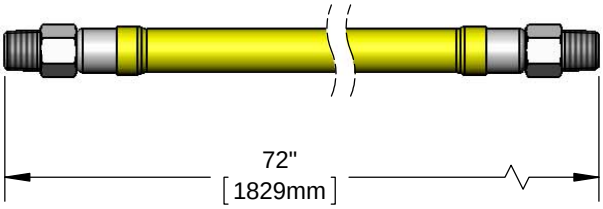

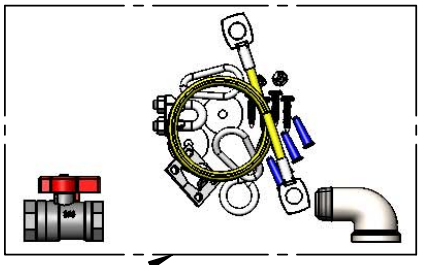

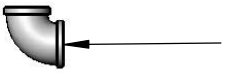

Features & Benefits:

- 72” coated gas appliance connector
- 1" NPT male freespin inlet
- 1" NPT male freespin outlet
- Installation kit
- 90˚ elbow included
- 360˚ rotatable hex nut rotates completely and freely
- Optimum torsional relief improves safety, increases connector life
- No lock-up during use with SwiveLink fitting
- Provides efficient, full gas flow
- Material: Extruded coated stainless steel braids

Product Compliance:

- ANSI Z21.69 / CSA 6.16
- NSF 2
- NFPA 54

Warranty: Five Year (Limited)

Performance Data:

- Gas Pressure: 1/2 psi max
- Temperature: 350˚F max
- Capacity: 348,000 BTU / hr min

T&S BRASS AND BRONZE WORKS, INC.
• 2 Saddleback Cove • Travelers Rest, SC 29690
Ph 800-476-4103 • Fax 864-834-3518
• Simi Valley, CA • Ph 800-423-0150 • www.tsbrass.com

Date: 10/09/15