Laboratory Products

TAG:

BL-5705-01

Single Ledge Faucet

Architect/Engineering Specifications:

Single hole single temperature deck mount faucet with polished chrome plated brass body, 5 7/8" swivel/rigid gooseneck with serrated tip outlet, compression cartridge with spring check, 4-arm handle and 1/2" NPSM male inlet. Certified to ASME A112.18.1 / CSA B125.1, NSF 61-Section 9 and NSF 372. Meets ADA ANSI/ICC A117.1 requirements.

Job Name_____
Model Specified_____Quantity_____
Variations Specified_____
Date_____

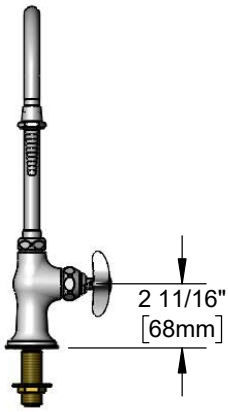

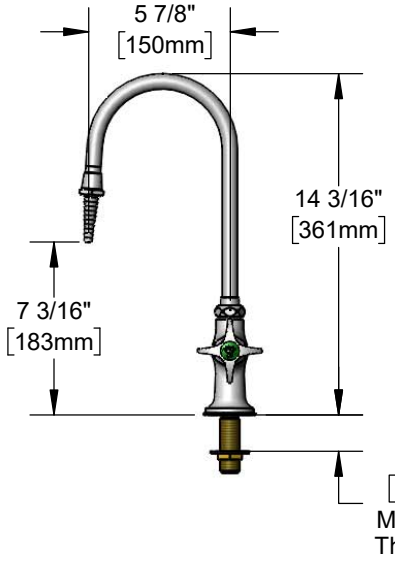

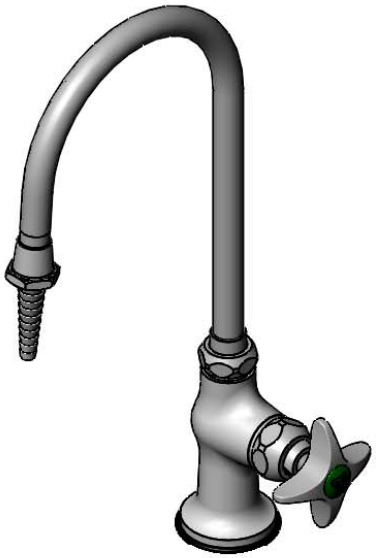

Features & Benefits:

- Single hole single temperature deck mount faucet w/ polished chrome plated brass body
- 5 7/8" swivel/rigid gooseneck
- Includes lock washer to convert swivel gooseneck to rigid
- Serrated tip outlet
- Quarter-turn Eterna compression cartridge w/ spring check
- 4-arm handle w/ green index
- 1/2" NPSM male inlet
- Optional tailpiece and nut for 1/4" NPT male connection
- Material: Polished chrome plated brass body & tubular spout and chrome plated metal handle

Product Compliance:

- ASME A112.18.1 / CSA B125.1
- NSF 61 - Section 9
- NSF 372 (Low Lead Content)
- ANSI A117.1 (ADA)

Warranty: One Year (Limited)

ADA Compliant

Performance Data:

- Pressure: 20 - 125 psi
- Temperature: 40 °F - 140 °F
- Flow Rate: 4.32 GPM @ 60 psi

Optional Handles

- ☐ 4" Wrist Action
- ☐ Lever
- ☐ 4-Arm (Standard)

Optional Cartridges With Checks

- ☐ Quarter-Turn Cerama w/ Check Valve
- ☐ Quarter-Turn Eterna w/ Spring Check (Standard)

T&S BRASS AND BRONZE WORKS, INC.
• 2 Saddleback Cove • Travelers Rest, SC 29690
Ph 800-476-4103 • Fax 864-834-3518
• Simi Valley, CA • Ph 800-423-0150 • www.tsbrass.com

Date: 12/20/19