# T&S BRASS AND BRONZE WORKS, INC.

2 Saddleback Cove / P.O. Box 1088
Travelers Rest, SC 29690

Travelers Rest, SC: 800-476-4103 • Simi Valley, CA: 800-423-0150 • Fax: 864-834-3518 • www.tsbrass.com

Model No.

**BL-5705-01**

Item No.

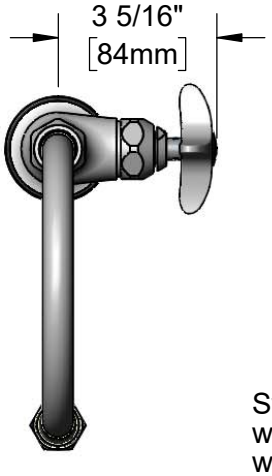


ADA Compliant

This Space for Architect/Engineer Approval

Job Name_____Date_____

Model Specified_____ Quantity_____

Customer/Wholesaler_____

Contractor_____

Architect/Engineer_____

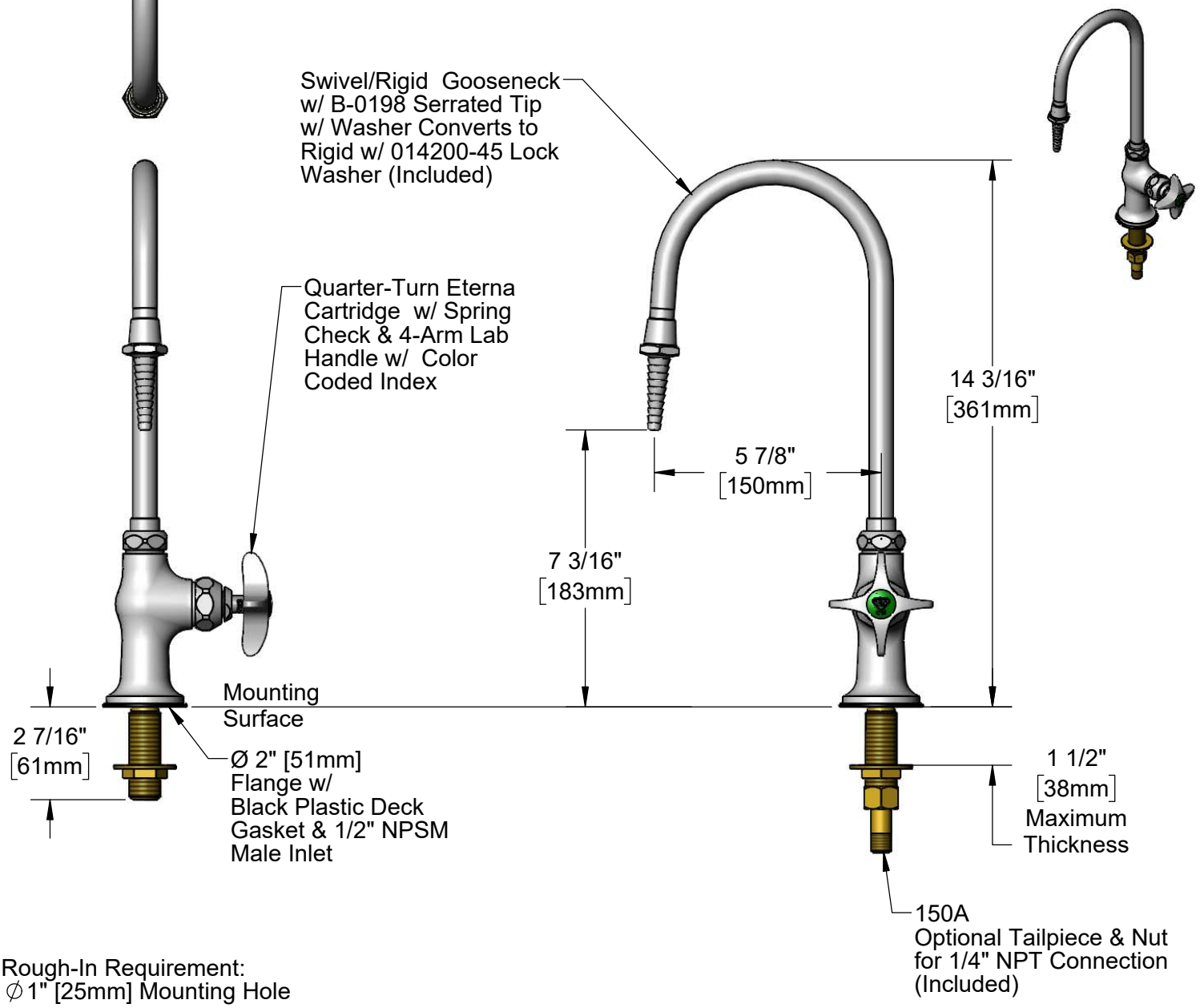


Rough-In Requirement:
∅1" [25mm] Mounting Hole

Product Specifications:

Single Hole Single Temperature Laboratory Faucet, Quarter-Turn Eterna Cartridge w/ Spring Check, 4-Arm Lab Handle, Swivel/Rigid Gooseneck, Serrated Tip Outlet & 1/2" NPSM Male Inlet

Product Compliance:

ASME A112.18.1 / CSA B125.1
NSF 61 - Section 9
NSF 372 (Low Lead Content)
ANSI A117.1 (ADA)

| Drawn: | LSA | Checked: | JRM | Approved: | JHB | Date: | 12/20/19 | Scale: | 1:4 | Sheet: | 1 of 2 |
|---|---|---|---|---|---|---|---|---|---|---|---|

# T&S BRASS AND BRONZE WORKS, INC.

2 Saddleback Cove / P.O. Box 1088
Travelers Rest, SC 29690

Travelers Rest, SC: 800-476-4103 • Simi Valley, CA: 800-423-0150 • Fax: 864-834-3518 • www.tsbrass.com

Model No.

**BL-5705-01**

Item No.

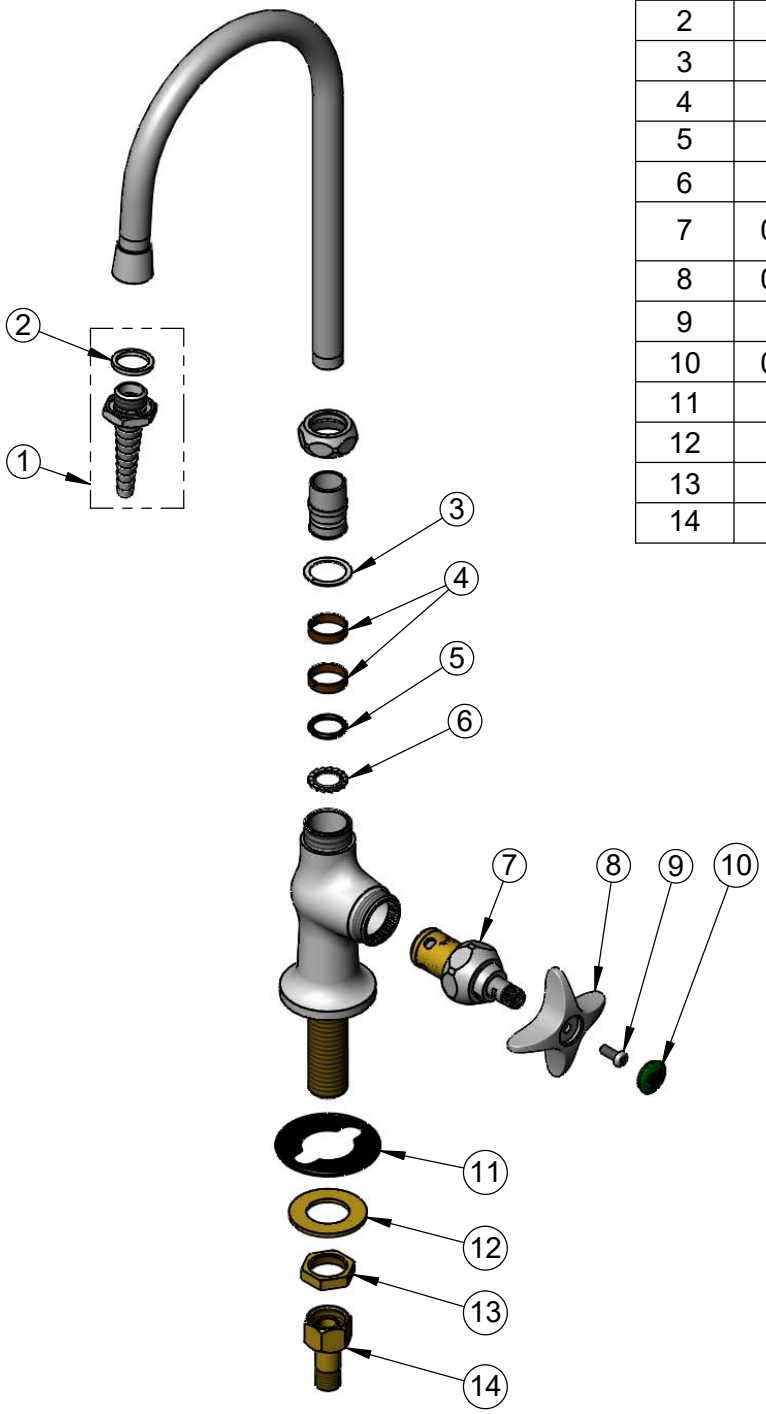


| ITEM NO. | SALES NO. | DESCRIPTION |
|---|---|---|
| 1 | B-0198 | Serrated Tip w/ Washer |
| 2 | 001051-45 | Washer |
| 3 | 009538-45 | Swivel Washer |
| 4 | 011429-45 | Swivel Sleeves (2) |
| 5 | 001074-45 | O-Ring |
| 6 | 014200-45 | Star Washer, Anti-Rotation |
| 7 | 012443-40NS | Quarter-Turn Eterna Cartridge w/ Spring Check, RTC |
| 8 | 002521-45NS | 4-Arm Handle (New Style) |
| 9 | 000925-45 | Lab Handle Screw |
| 10 | 001191-45NS | Green "CW" Lab Button Index |
| 11 | 144L | Black Plastic Deck Gasket |
| 12 | 000999-45 | Brass Lock Washer |
| 13 | 002954-45 | Shank Lock Nut |
| 14 | 150A | 1/4" NPT Tailpiece & Nut |

Product Specifications:

Single Hole Single Temperature Laboratory Faucet, Quarter-Turn Eterna Cartridge w/ Spring Check, 4-Arm Lab Handle, Swivel/Rigid Gooseneck, Serrated Tip Outlet & 1/2" NPSM Male Inlet

Product Compliance:

ASME A112.18.1 / CSA B125.1
NSF 61 - Section 9
NSF 372 (Low Lead Content)
ANSI A117.1 (ADA)

| Drawn: | Checked: | Approved: | Date: | Scale: | Sheet: |
|---|---|---|---|---|---|
| LSA | JRM | JHB | 12/20/19 | NTS | 2 of 2 |