Faucets

TAG:

5F-8WLX10

8" Wall Mount Faucet

Architect/Engineering Specifications:

8" wall mount mixing faucet with polished chrome plated brass body, 10" equip swing nozzle, ceramic cartridges, equip lever handles, and 1/2" NPT female inlets. Certified to ASME A112.18.1/CSA B125.1, NSF 61-Section 9 and NSF 372. Meets ADA ANSI/ICC A117.1 requirements.

Job Name_____
Model Specified_____Quantity_____
Variations Specified_____
Date_____

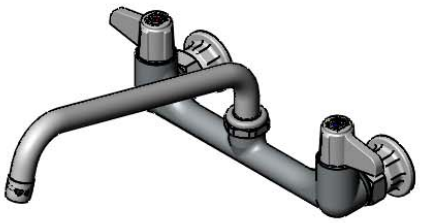

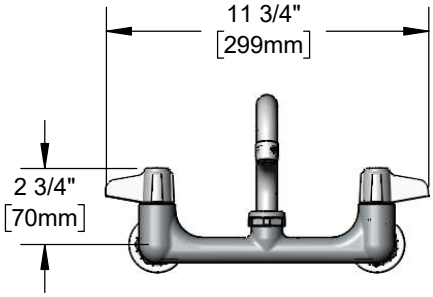

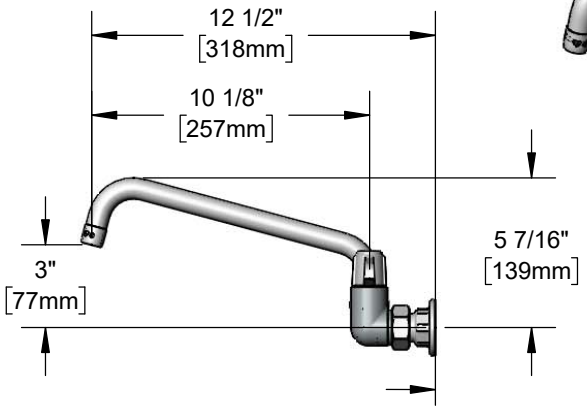

Features & Benefits:

- 8" wall mount mixing faucet with polished chrome plated brass body
- 10" equip swing nozzle with laminar flow device
- Quarter-turn ceramic cartridges
- equip lever handles with color coded screws
- 1/2" NPT female inlets with ∅2" wall flanges
- Material: Polished chrome plated brass body & tubular spout and chrome plated metal handles

Product Compliance:

- ASME A112.18.1 / CSA B125.1
- NSF 61 - Section 9
- NSF 372 (Low Lead Content)
- ANSI A117.1 (ADA)

Warranty: One Year (Limited)

Performance Data:

- Pressure: 20 - 125 psi [1.38 - 8.62 bar]
- Temperature: 40 °F - 140 °F [4.44 °C - 60 °C]
- Flow Rate: 5.20 GPM [19.68 L/min] @ 60 psi [4.14 bar]

ADA Compliant