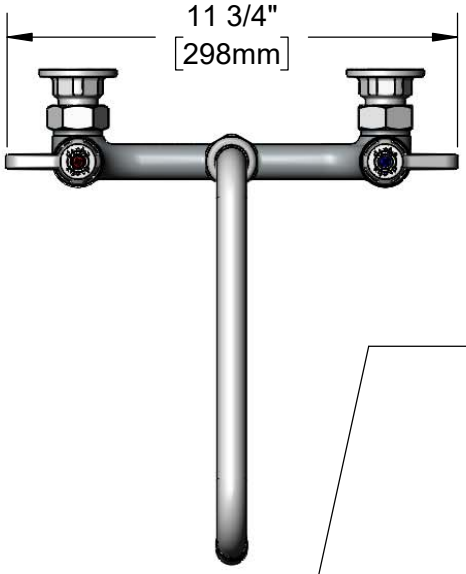

ADA Compliant

This Space for Architect/Engineer Approval

Job Name_____Date_____

Model Specified_____ Quantity_____

Customer/Wholesaler_____

Contractor_____

Architect/Engineer_____

5SP-10
10" equip Swing Nozzle
w/ Laminar Flow Device.
Rigid Conversion Requires
014200-45 Lock Washer
(Sold Separately)

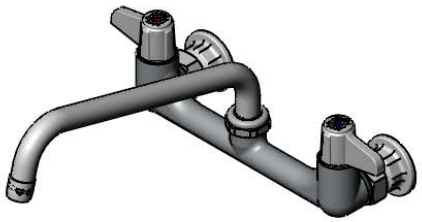

Quarter-Turn
Ceramic Cartridges &
equip Lever Handles
w/ Color Coded Screws

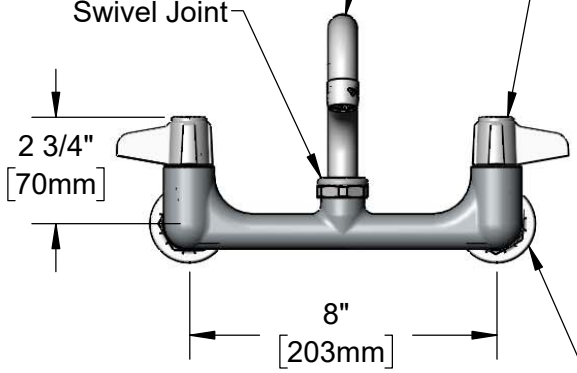

Adjustable From
7 3/4" to 8 1/4"
[197mm to 210mm]

Ø 2" [51mm]
Flanges w/
1/2" NPT
Female Inlets

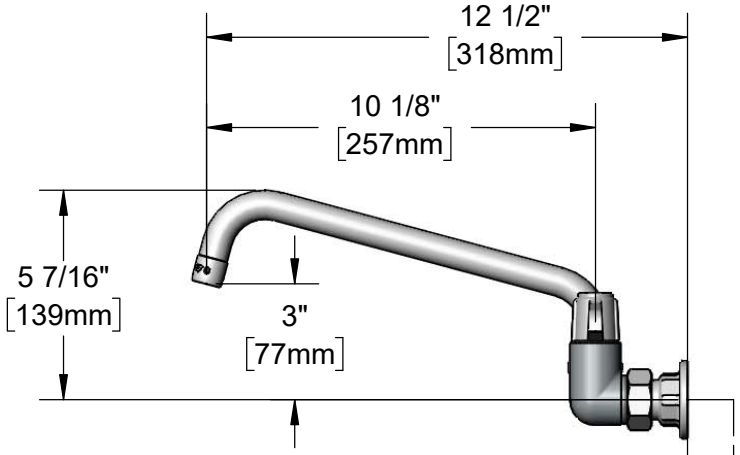

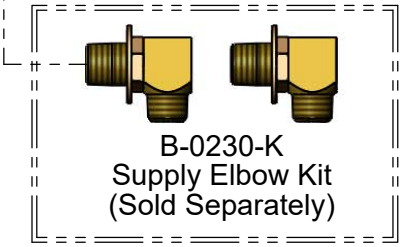

B-0230-K
Supply Elbow Kit
(Sold Separately)

Model Number	Product Specifications:
5F-8WLX10	8" Wall Mount Mixing Faucet, Quarter-Turn Ceramic Cartridges, equip Lever Handles, 10" Swing Nozzle & 1/2" NPT Female Inlets
Product Compliance: ASME A112.18.1 / CSA B125.1 NSF 61 - Section 9 NSF 372 (Low Lead Content) ANSI A117.1 (ADA)	

equip Foodservice Accessories

equip by TSB

2 Saddleback Cove, P.O. Box 1088
Travelers Rest, South Carolina 29690
Phone: 800.891.4808 Fax: 800.868.0084
equip.tsbrass.com

Drawn:	Checked:	Approved:	Date:	Scale:	Sheet:
LSA	JRM	JHB	08/31/20	1:4	1 of 2

ITEM NO.	SALES NO.	DESCRIPTION
1	5SP-10	10" equip Swing Nozzle
2	014250-45	Laminar Flow Device
3	013839-25	equip Swivel Nut
4	013848-45	O-Ring
5	5-HDL-L	equip Lever Handle w/ Color Coded Screws
6	00AA	1/2" NPT Female Eccentric Flange
7	001019-45	Coupling Nut Washer
8	013788-45	equip Ceramic Cartridge, LTC
9	013787-45	equip Ceramic Cartridge, RTC

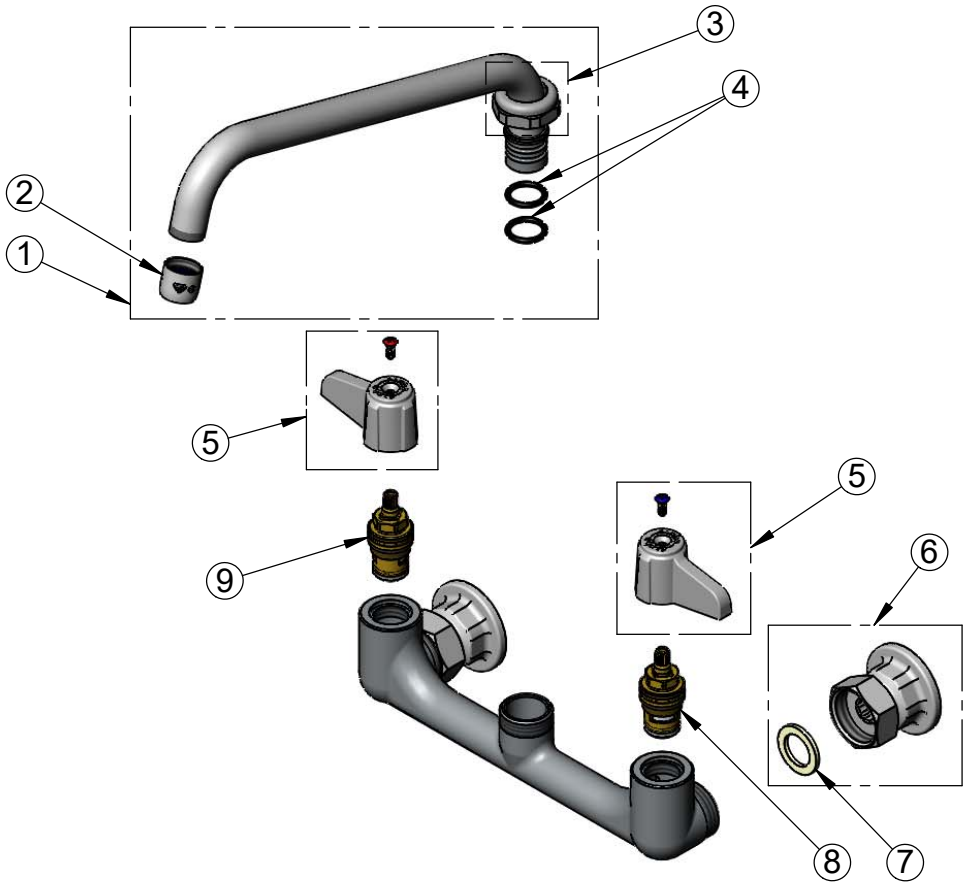

Model Number

5F-8WLX10

Product Compliance:

ASME A112.18.1 / CSA B125.1
NSF 61 - Section 9
NSF 372 (Low Lead Content)
ANSI A117.1 (ADA)

Product Specifications:

8" Wall Mount Mixing Faucet, Quarter-Turn Ceramic Cartridges, equip Lever Handles, 10" Swing Nozzle & 1/2" NPT Female Inlets

equip Foodservice Accessories

2 Saddleback Cove, P.O. Box 1088
Travelers Rest, South Carolina 29690
Phone: 800.891.4808 Fax: 800.868.0084
equip.tsbrass.com

Drawn: LSA	Checked: JRM	Approved: JHB	Date: 08/31/20	Scale: NTS	Sheet: 2 of 2