T&S BRASS AND BRONZE WORKS, INC.

2 Saddleback Cove / P.O. Box 1088
Travelers Rest, SC 29690

REG. #A2601
ISO #9001

Model No.
009616-40

Item No.

Travelers Rest, SC: 800-476-4103 • Simi Valley, CA: 800-423-0150 • Fax: 864-834-3518 • www.tsbrass.com

This Space for Architect/Engineer Approval

Job Name_____Date_____

Model Specified_____ Quantity_____

Customer/Wholesaler_____

Contractor_____

Architect/Engineer_____



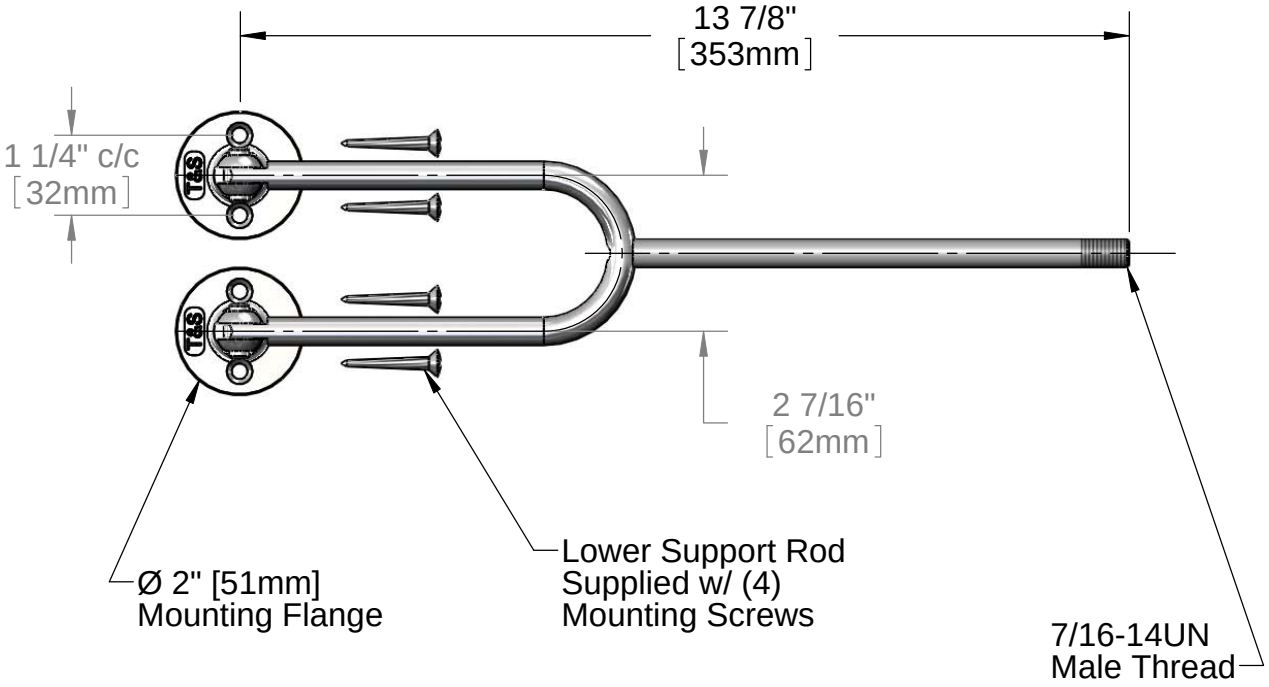

Product Specifications:
Service Sink Lower Support Rod Assembly

Drawn	Checked	Approved
DHL	DMH	JHB
Scale: NTS		Date: 01/13/11