Parts and Repair Kits

007947-40

TAG:

Quarter-Turn Eterna Cartridge, RTC

Architect/Engineering Specifications:

Quarter-Turn Eterna cartridge, RTC . Certified to ASME A112.18.1 / CSA B125.1, NSF 61-Section 9 and NSF 372.

Job Name_____
Model Specified_____Quantity_____
Variations Specified_____
Date_____

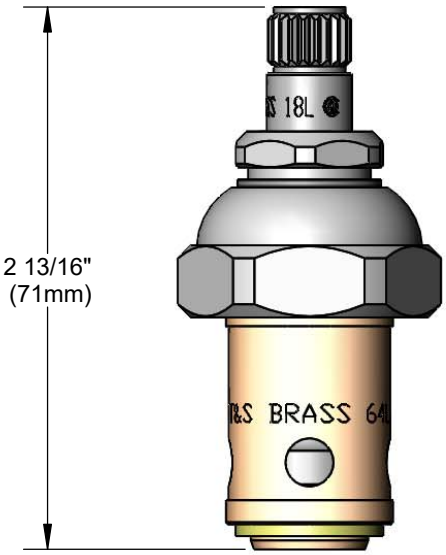

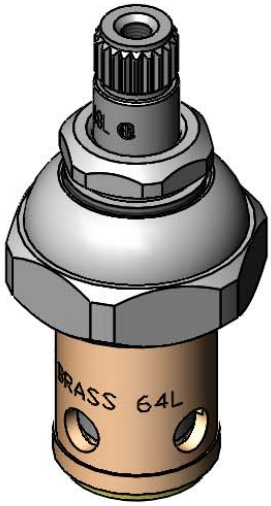

Features & Benefits:

- Quarter-Turn Eterna cartridge, RTC

Product Compliance:

- ASME A112.18.1 / CSA B125.1
- NSF 61 - Section 9
- NSF 372 (Low Lead Content)

Warranty: One Year (Limited)

Performance Data:

- Pressure: 20 - 125 psi
- Temperature: 40°F - 140°F
- Flow Rate: 12.36 GPM @ 60 psi

T&S BRASS AND BRONZE WORKS, INC.
• 2 Saddleback Cove • Travelers Rest, SC 29690
Ph 800-476-4103 • Fax 864-834-3518
• Simi Valley, CA • Ph 800-423-0150 • www.tsbrass.com

Date: 10/04/19