# T&S BRASS AND BRONZE WORKS, INC.

2 Saddleback Cove / P.O. Box 1088
Travelers Rest, SC 29690

Travelers Rest, SC: 800-476-4103 • Simi Valley, CA: 800-423-0150 • Fax: 864-834-3518 • www.tsbrass.com

Model No.

**007947-40**

Item No.

This Space for Architect/Engineer Approval

Job Name_____Date_____

Model Specified_____ Quantity_____

Customer/Wholesaler_____

Contractor_____

Architect/Engineer_____



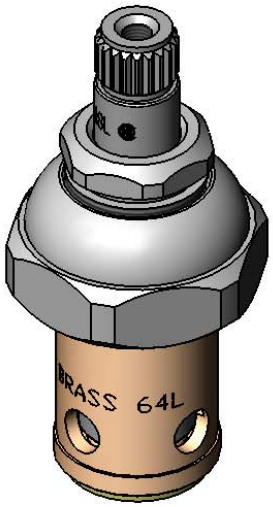


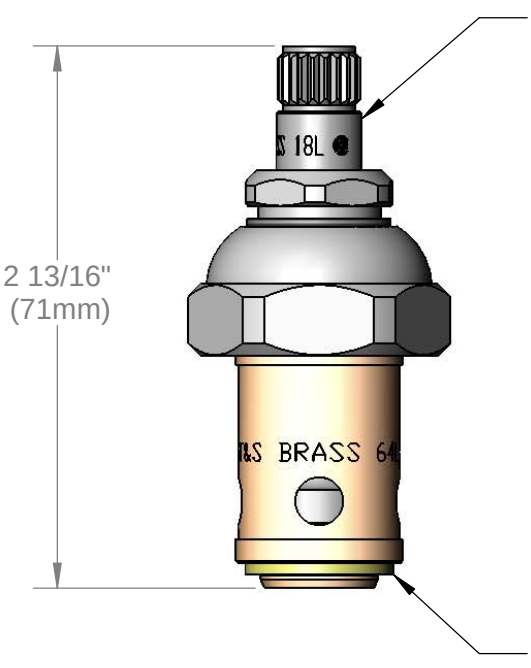


Product Specifications:

Quarter-Turn Eterna Cartridge, RTC

Product Compliance:

ASME A112.18.1 / CSA B125.1
NSF 61 - Section 9
NSF 372 (Low Lead Content)

| Drawn: JBC | Checked: JRM | Approved: JHB | Date: 06/08/15 | Scale: 1:1 | Sheet: 1 of 2 |
|---|---|---|---|---|---|

# T&S BRASS AND BRONZE WORKS, INC.

**2 Saddleback Cove / P.O. Box 1088**
**Travelers Rest, SC 29690**

Travelers Rest, SC: 800-476-4103 • Simi Valley, CA: 800-423-0150 • Fax: 864-834-3518 • www.tsbrass.com

Model No.
**007947-40**

Item No.

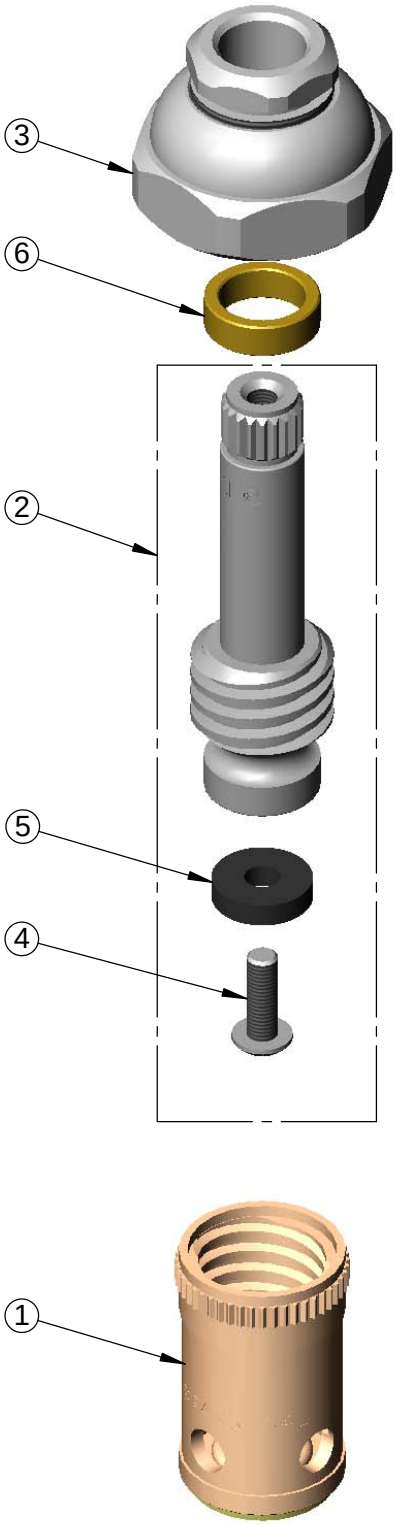


| ITEM NO. | SALES NO. | DESCRIPTION |
|---|---|---|
| 1 | 000788-20 | Removable Insert RTC Assembly |
| 2 | 000811-25 | Spindle |
| 3 | 000607-40 | Bonnet Assembly |
| 4 | 000933-45 | B-1100 Seat Washer Screw |
| 5 | 001092-45 | Seat Washer |
| 6 | 001466-20 | 1/4 Turn Sleeve |

Product Specifications:
Quarter-Turn Eterna Cartridge, RTC

Product Compliance:

ASME A112.18.1 / CSA B125.1
NSF 61 - Section 9
NSF 372 (Low Lead Content)

| Drawn: | JBC | Checked: | JRM | Approved: | JHB | Date: | 06/08/15 | Scale: | NTS | Sheet: | 2 of 2 |
|---|---|---|---|---|---|---|---|---|---|---|---|