Parts and Repair Kits

005266-25

TAG:

Washdown Hose Swivel

Architect/Engineering Specifications:

3/4" washdown hose swivel with thermometer tee.



Job Name_____
Model Specified_____Quantity_____
Variations Specified_____
Date_____

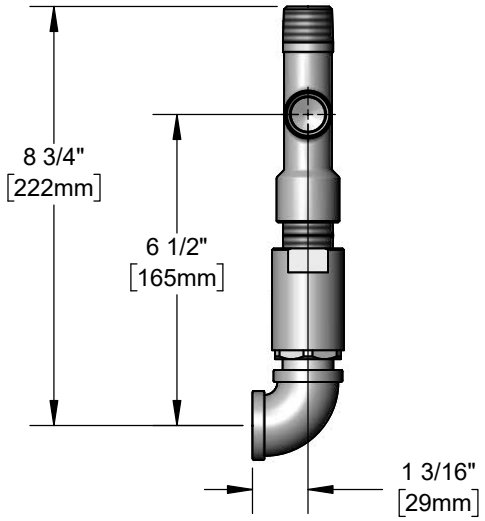

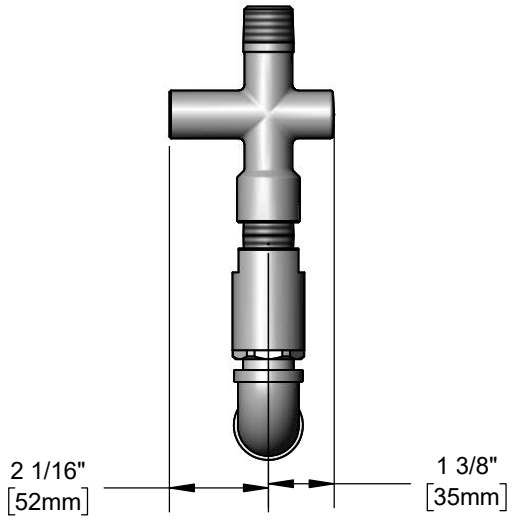

Features & Benefits:

- 3/4" washdown hose swivel
- Thermometer tee w/ 1/2" NPT female threads
- Material: Chrome plated brass

Product Compliance:

- NSF 61 Exempt (Non-Potable)

Warranty: One Year (Limited)

Performance Data:

- N/A

T&S BRASS AND BRONZE WORKS, INC.
• 2 Saddleback Cove • Travelers Rest, SC 29690
Ph 800-476-4103 • Fax 864-834-3518
• Simi Valley, CA • Ph 800-423-0150 • www.tsbrass.com

Date: 07/17/20