T&S BRASS AND BRONZE WORKS, INC.

2 Saddleback Cove / P.O. Box 1088
Travelers Rest, SC 29690

Travelers Rest, SC: 800-476-4103 • Simi Valley, CA: 800-423-0150 • Fax: 864-834-3518 • www.tsbrass.com

Model No.

005266-25

Item No.

This Space for Architect/Engineer Approval

Job Name_____Date_____

Model Specified_____ Quantity_____

Customer/Wholesaler_____

Contractor_____

Architect/Engineer_____

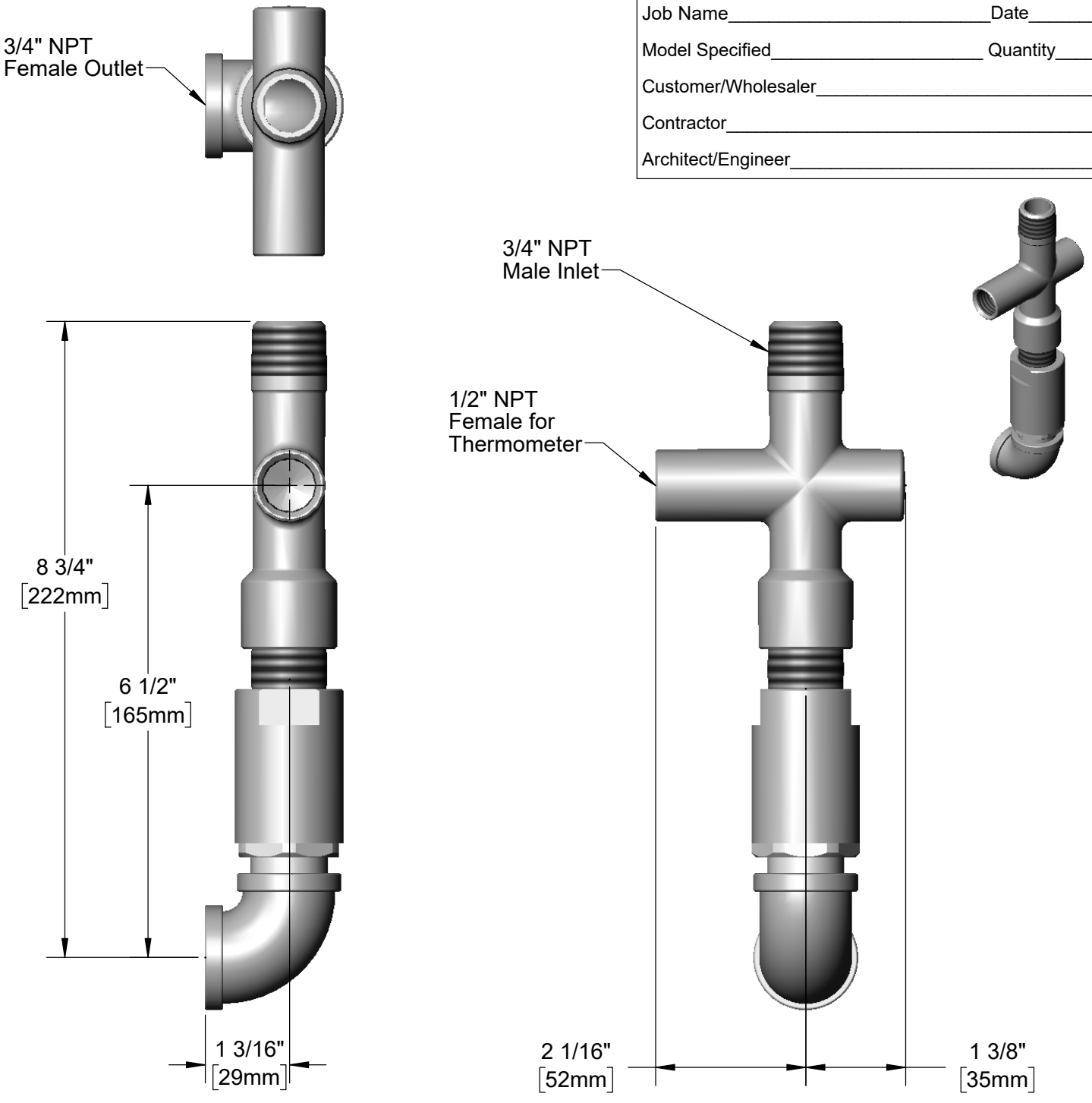

Product Specifications:

3/4" Washdown Swivel & Thermometer Tee

Product Compliance:

NSF 61 Exempt (Non-Potable)

Drawn:	DMH	Checked:	JRM	Approved:	JHB	Date:	07/17/20	Scale:	1:2	Sheet:	1 of 1