Scotsman®
Ice Systems

Installation and User's Manual for Air and Water Cooled Modular Cube **Prodigy ELITE® A Series** Models MC0322, MC0522, MC0722, MC0330, MC0530, MC0630, MC0830, MC1030

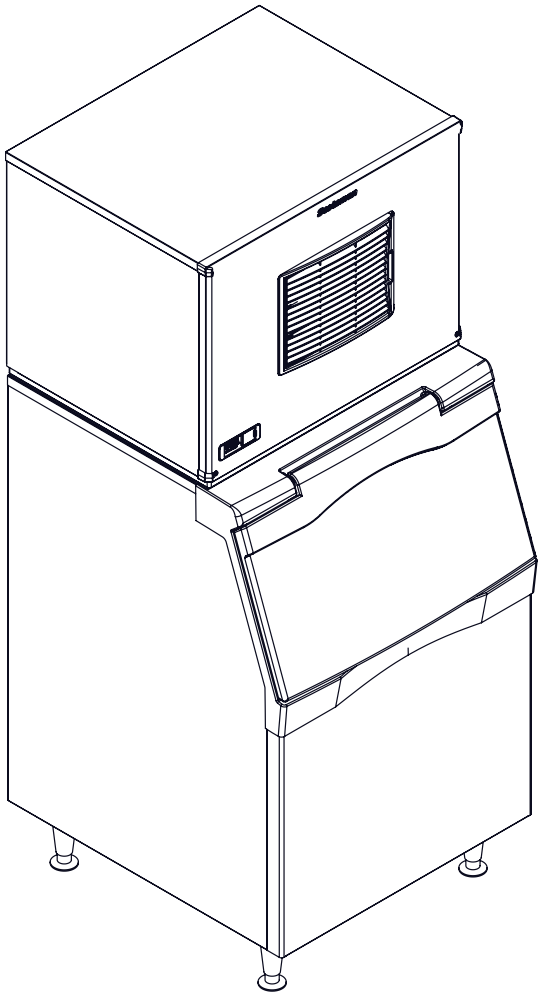

PRODIGY® ELITE

The design of this modular cuber is the result of years of experience and testing. Standard features include front accessible indicator lights and on-off switches that provide the user with fast access to critical information and easy operational control. In addition, the Scotsman ICELINQ® app allows users to connect to the machine via Bluetooth® to monitor, control, and maintain the ice machine**.**

Keep this manual for future reference.

This installation and user manual is divided into three main sections: **Installation**, which provides the trade person with the information needed to set up and install this product; **Use and Operation**, which provides the user with the information to use the product; and **Maintenance**, which provides the user with the information needed keep it operating efficiently.

Contents

Installation: Product Specifications . . . . . Page 2
Model Number Description . . . . . Page 3
Product Description & Electrical Requirements . . . . . Page 4
MC0322 and MC0522 Cabinet Layout . . . . . Page 5
MC0722 Cabinet Layout. . . . . Page 6
MC0330, MC0530, MC0630 Cabinet Layout . . . . . Page 7
MC0830 and MC1030 Cabinet Layout . . . . . Page 8
Water . . . . . Page 9
Panel Removal . . . . . Page 10
Plumbing Requirements . . . . . Page 11
Electrical. . . . . Page 12
Final Check List . . . . . Page 13
Initial Start Up . . . . . Page 14
Adjustments . . . . . Page 15
Use and Operation . . . . . Page 16
Control Switches. . . . . Page 17
Cleaning, Sanitation and Maintenance . . . . . Page 18
What to do before calling for service . . . . . Page 20

WARNING: Cancer and Reproductive Harm
www.P65Warnings.ca.gov

Note any Caution or Warning symbols when they appear on the product or in this manual. They indicate potential hazards.

⚠WARNING ⚠CAUTION

Location Limitations:

The product is designed to be installed indoors, in a controlled environment. Air cooled models discharge very warm air into the room out the back. Space must be allowed at the sides and back for air discharge. Water cooled models discharge warm water into the building's drain.

Space needs to be provided on both sides and above for service access.

Space Limitations

Note: Although the machine will function, ice capacity of air cooled machines will be significantly reduced with minimal clearance at the sides, back and top.

Some space is recommended for service and maintenance purposes on all models. 6" of space at the sides and back are required for adequate operation. To get the most capacity, locate the machine away from heat producing appliances and heating ducts, and **allow 12-18 inches of space at the sides and top for good air flow.**

Airflow is in the front, out the back. Attach a baffle kit to the back when an air cooled unit is installed with minimal side and top clearance. See the next page for kit numbers.

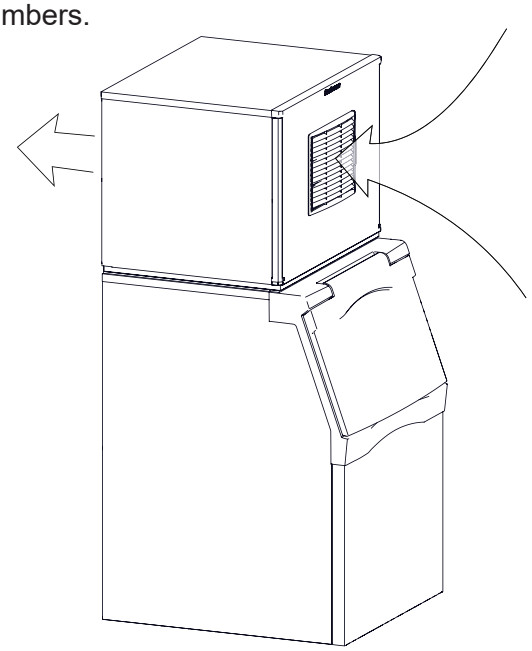

Air Flow

Environmental Limitations

	Minimum	Maximum
Air temperature	50°F.	100°F.
Water temperature	40°F.	100°F.
Water pressure	20 psi	80 psi

Power supply – acceptable voltage ranges

	Minimum	Maximum
115 volt model	104 volts	126 volts
208-230 volt model	198 volts	253 volts

Warranty Information

The warranty statement for this product is provided separately from this manual. Refer to it for applicable coverage. In general warranty covers defects in material or workmanship. It does not cover maintenance, corrections to installations, or situations when the machine is operated in circumstances that exceed the limitations printed above.

Product Information

This product is a modular cuber. This type of machine is designed to be placed on an ice storage bin or an ice dispenser. Many installations only require the matching bin, but some also require an adapter to be placed between the bin and the cuber or between the dispenser and the cuber. This product cannot be stacked. See the chart on the next page for application information.

Example:

- MC0322SA-1A
- MC= modular cuber
- 03= nominal ice capacity in 100s of pounds
- 22= nominal width of cabinet
- S= Cube size. S=small or half dice cube. M=medium or full dice cube
- A=Condenser type. A=air cooled. W=water cooled
- -1=115 60 Hz, -32=208-230 60 Hz, -3= 208-230 3 phase 60 Hz
- A=Series revision code.

Note: Listed model numbers typically include only the first five characters of the model number.

Options:

There are several field-installed options that can be installed at initial start up or later. They include:

- KVS, Vari-Smart Adjustable ice level system.
- KBILC, Basic Ice Level Control
- KSB, SmartBoard Advanced feature board.
- **Side Air Flow Kits:**
  - PPSA223 (MC0322, MC0522)
  - KPPSA22, (MC0722)
  - KPPSA323 (MC0330, MC0530, MC0630)
  - KPPSA329 (MC0830, MC1030)
- Some installations require bin or dispenser adapters, see following tables for specific applications.

Standard Bin Applications - Adapter information.

Model	B222 B322	B530P, B330P, B530S,	B842S	B948S
MC0322, MC0522, MC0722	Direct fit	KBT27	Not available	Not available
MC0530, MC0630, MC0830, MC1030	Does not fit	Direct fit	KBT28	KBT22

Hotel Dispensers

The HD22 and HD30 are compatible with this ice machine, no adapters are needed. Some typical combinations include:

- HD22 – use with MC0322 or MC0522
- HD30 – use with MC0330 or MC0530

Ice and Beverage Dispensers – Adapter information

Model	ID150	ID200 or ID250
MC0322, MC0522, MC0722	KBT42	KBT43
MC0530, MC0630, MC0830, MC1030	Does not fit	KBT44

Other Bins & Applications:

Note the drop zone and ice level control sensor locations in the illustrations on the next pages. A bin or dispenser top must accommodate their locations.

See sales literature for additional applications and specialized kits.

Scotsman Ice Systems are designed and manufactured with the highest regard for safety and performance.

Scotsman assumes no liability of responsibility of any kind for products manufactured by Scotsman that have been altered in any way, including the use of any part and/or other components not specifically approved by Scotsman.

Scotsman reserves the right to make design changes and/or improvements at any time. Specifications and design are subject to change without notice.

Dimensions w" x d" x h"	Model	Series	Electrical volts/Hz/ phase	Condenser	Minimum Circuit Ampacity	Maximum Fuse Size*
22.6** x 24 x 23	MC0322SA-1	A	115/60/1	Air	12.7	15
	MC0322SW-1	A	115/60/1	Water	11.9	15
	MC0322MA-32	A	208-230/60/1	Air	6.1	15
	MC0522SA-1	A	115/60/1	Air	13.5	15
	MC0522SW-1	A	115/60/1	Water	11.9	15
	MC0522SA-32	A	208-230/60/1	Air	6.5	15
	MC0322MA-32	A	208-230/60/1	Air	6.1	15
30.6** x 24 x 23	MC0330SA-1	A	115/60/1	Air	12.7	15
	MC0330SW-1	A	115/60/1	Water	11.9	15
	MC0330MA-32	A	208-230/60/1	Air	6.1	15
	MC0530SA-1	A	115/60/1	Air	15.2	20
	MC0530SW-1	A	115/60/1	Water	13.5	15
	MC0530SA-32	A	208-230/60/1	Air	7.8	15
	MC0530MA-32	A	208-230/60/1	Air	7.8	15
	MC0630SA-32	A	208-230/60/1	Air	18.2	20
	MC0630SW-32	A	208-230/60/1	Water	17	20
22.6** x 24 x 29	MC0722SA-32	A	208-230/60/1	Air	11	15
30.6** x 24 x 29	MC0830SA-32	A	208-230/60/1	Air	10.2	15
	MC0830SW-32	A	208-230/60/1	Water	9	15
	MC0830SA-3	A	208-230/60/3	Air	8.4	15
	MC1030SA-32	A	208-230/60/1	Air	12.2	20
	MC1030SW-32	A	208-230/60/1	Water	11	15

* Or HACR type circuit breakers.

** Maximum width at top panel.

MC0322 and MC0522 Cabinet Layout

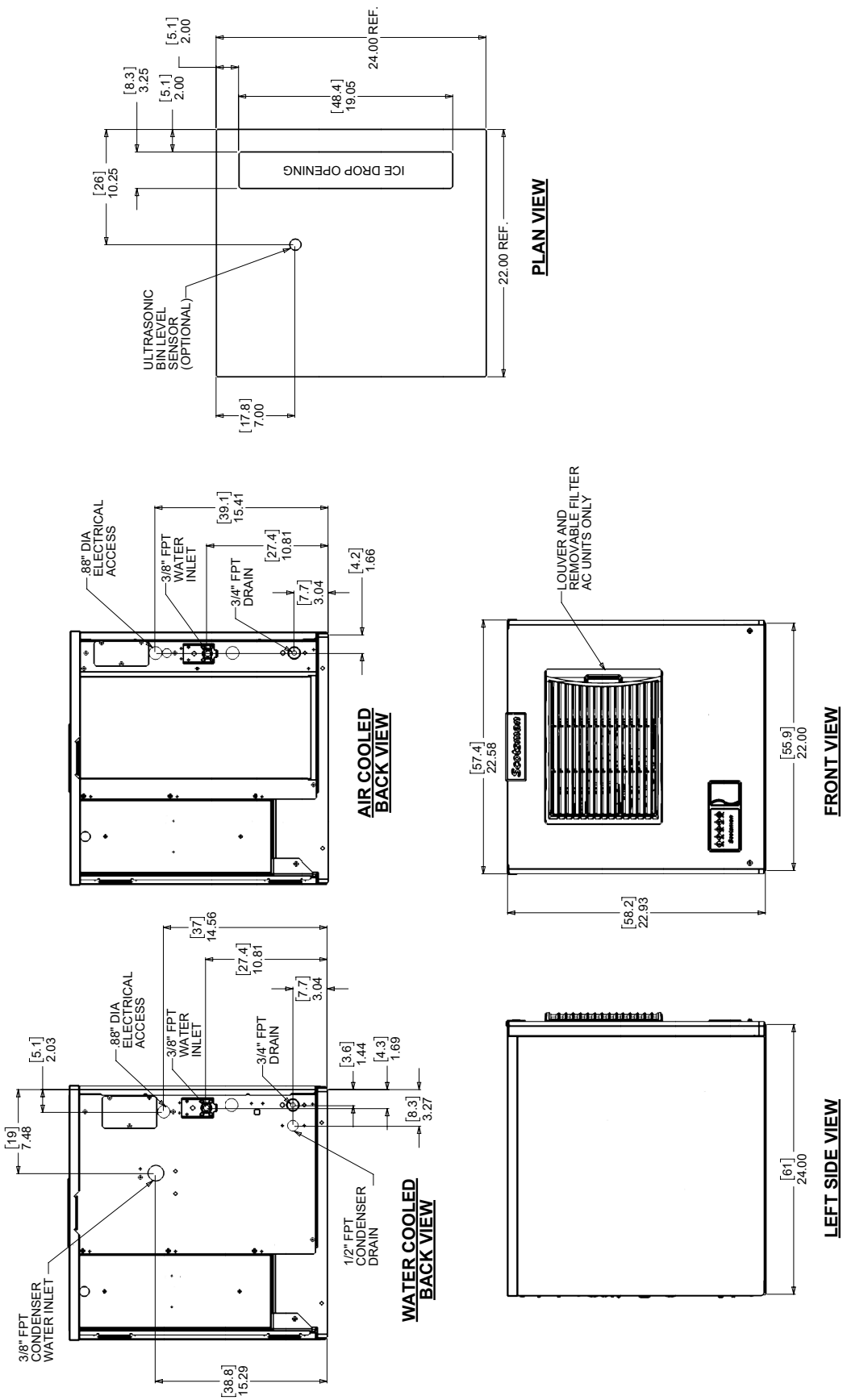

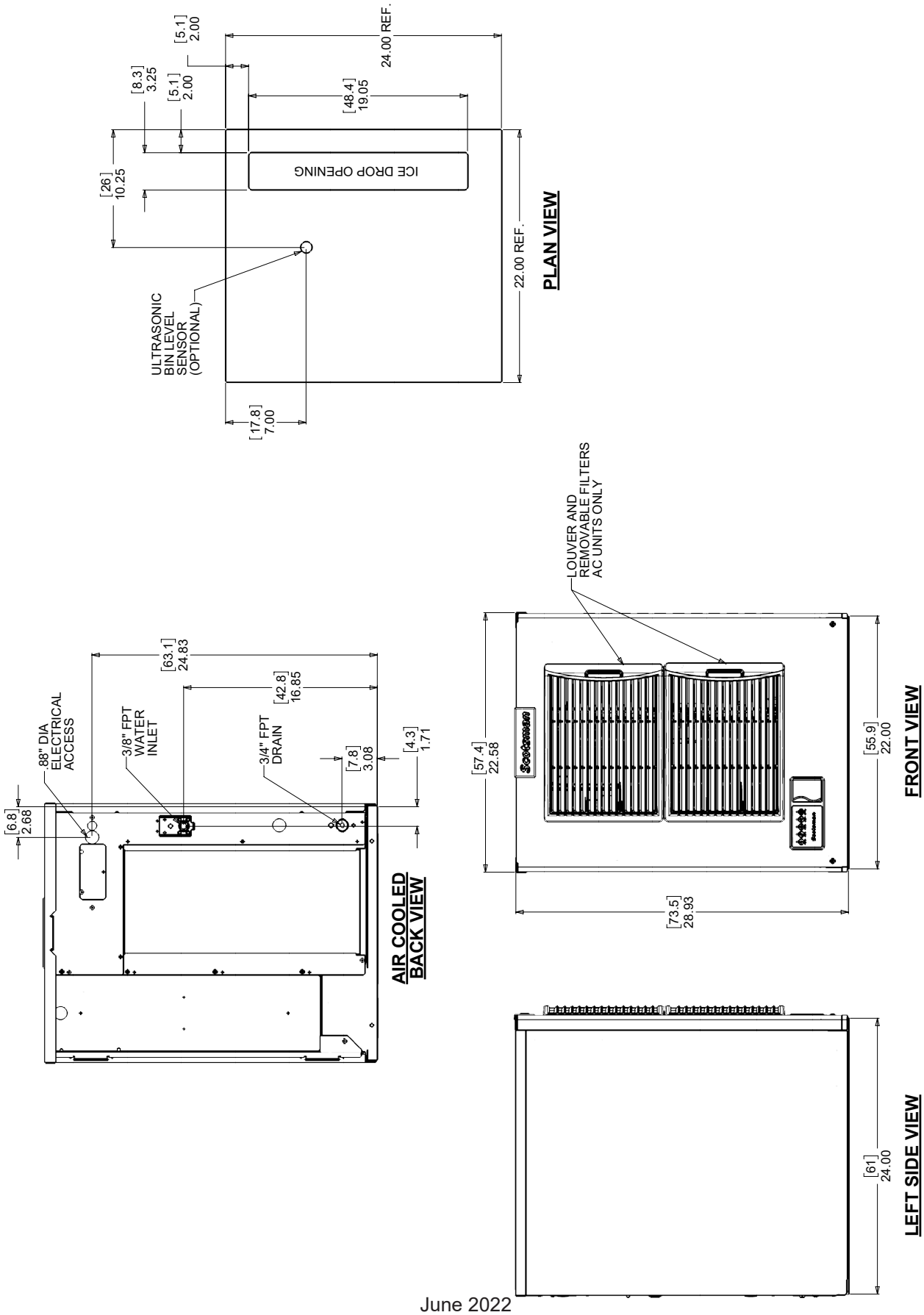
[5.1] 2.00
24.00 REF.
[8.3] 3.25
[5.1] 2.00
[48.4] 19.05
ICE DROP OPENING
[26] 10.25
22.00 REF.
PLAN VIEW
ULTRASONIC BIN LEVEL SENSOR (OPTIONAL)
[17.8] 7.00
LOUVER AND REMOVABLE FILTERS AC UNITS ONLY
[63.1] 24.83
[42.8] 16.85
.88" DIA ELECTRICAL ACCESS
3/8" FPT WATER INLET
3/4" FPT DRAIN
[7.8] 3.08
[4.3] 1.71
[6.8] 2.68
AIR COOLED BACK VIEW
[57.4] 22.58
[55.9] 22.00
FRONT VIEW
[73.5] 28.93
[61] 24.00
LEFT SIDE VIEW

MC0330, MC0530, MC0630 Cabinet Layout

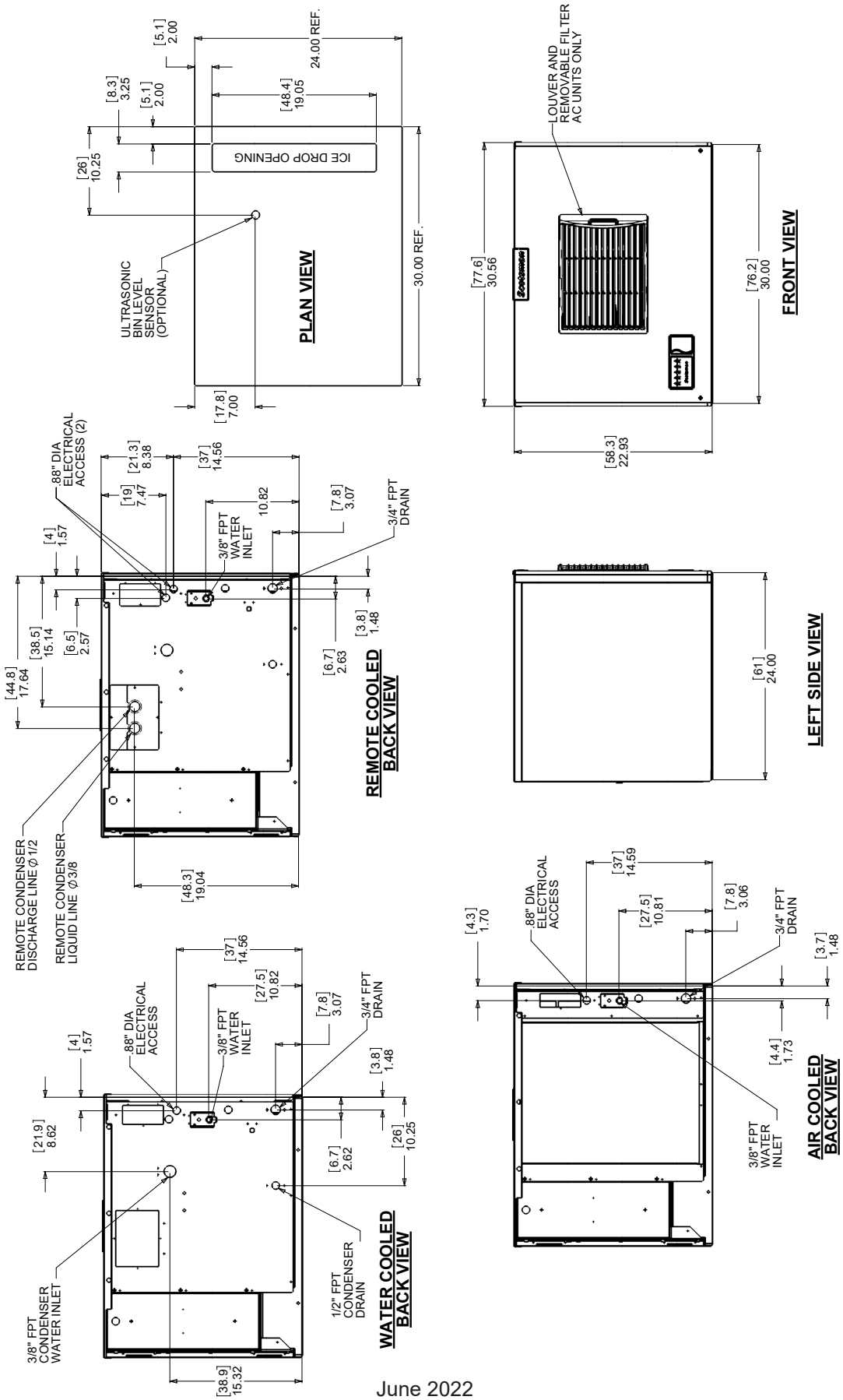

MC0830 and MC1030 Cabinet Layout

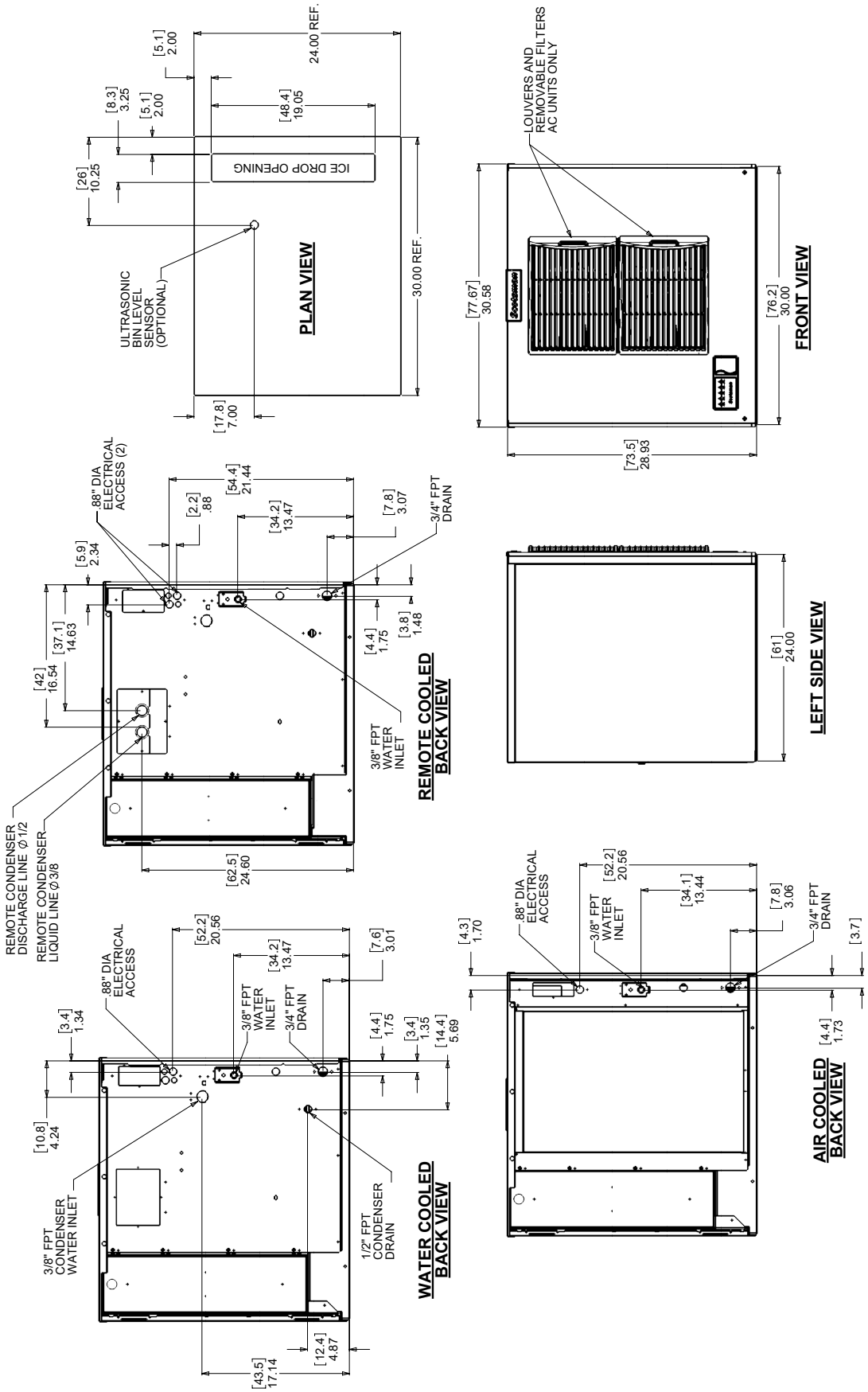

Water

The quality of the water supplied to the ice machine will have an impact on the time between cleanings and ultimately on the life of the product. Water can contain impurities either in suspension or in solution. Suspended solids can be filtered out. In solution or dissolved solids cannot be filtered, they must be diluted or treated. Water filters are recommended to remove suspended solids. Some filters have treatment in them for suspended solids. Check with a water treatment service for a recommendation.

RO Water

This machine can be supplied with Reverse Osmosis water, but the water conductivity must be no less than 10 microSiemens/cm.

Potential for Airborne Contamination

Installing an ice machine near a source of yeast or similar material can result in the need for more frequent sanitation cleanings due to the tendency of these materials to contaminate the machine.

Most water filters remove chlorine from the water supply to the machine which contributes to this situation. Testing has shown that using a filter that does not remove chlorine, such as the Scotsman AquaPatrol™, will greatly improve this situation, while the ice making process itself will remove the chlorine from the ice, resulting in no taste or odor impact. Additionally, devices intended to enhance ice machine sanitation, such as the Scotsman AquaBullet®, can be placed in the machine to keep it cleaner between manual cleanings

Water purge

Cube ice machines use more water than what ends up in the bin as ice. While most water is used during ice making, a portion is designed to be drained out every cycle to reduce the amount of hard water scale in the machine. That's known as water purge, and an effective purge can increase the time between needed water system cleaning. In addition, this product has the capability to automatically vary the amount of water purged based on the purity of the water supplied to it. The water purge rate can also be set manually. Adjustments of purge due to local water conditions are not covered by warranty.

Panel Removal

1. Locate and disengage the two quarter turn captured screws at the bottom of the front panel.
2. Pull the front panel out at the bottom.
3. Lift the front panel up and off the machine.
4. Remove two screws at the front of the top panel. Lift up the front of the top panel, push the top panel back an inch, then lift to remove.
5. Locate and loosen the screws holding each side panel to the base. Left side panel also has a screw holding it to the control box.
6. Pull the side panel forward to release it from the back panel.

Model and Serial Numbers

This manual covers several models. The model number on the product is located in two places, on the back dataplate and on the model and serial number tag, located behind the front panel. See the illustration for the dataplate and serial tag locations.

Write the model and serial number of this product here:

_____

Write the day, month and year of initial start up here:

_____

Switch Door

All models ship with the indicator lights visible at the lower left front. The On and Off buttons and the Bluetooth® button are covered by a door to the right of those lights. The on and off buttons and indicator lights duplicate what is on the controller.

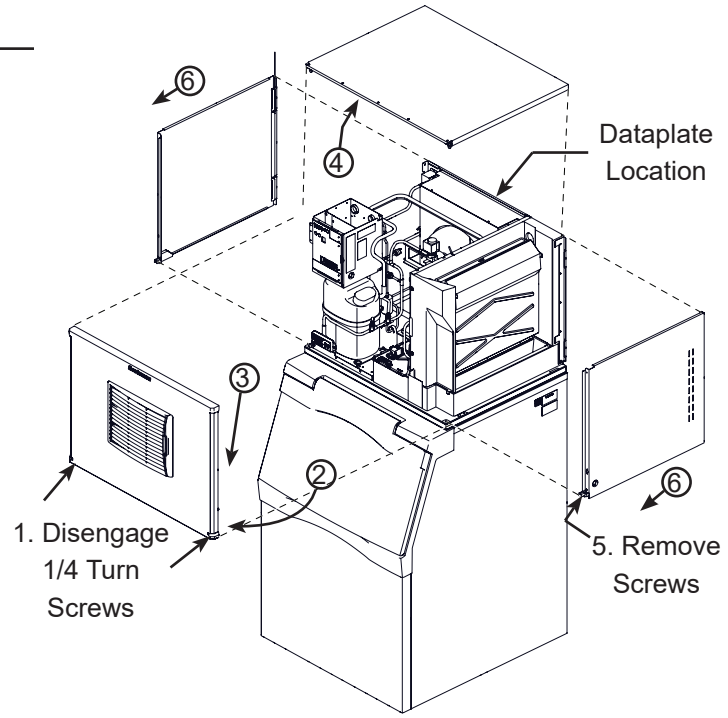

Dataplate Location and Panel Removal

Uncrate and Set Up

Begin with unpacking the ice storage bin. Remove the carton, and using part of the carton as a cushion, tip the bin on its back to remove the skid and attach the legs or casters.

Return the bin to an upright position. Check the bin top gasket for gaps and tears, fill any in with food grade sealant prior to placing the ice machine on the bin.

Install the bin top adapter or ice dispenser adapter, if one is required for the application.

If the ice machine has not been unpacked, do so now. Remove the carton from the skid. Lift the ice machine off the skid directly onto the bin.

Note: The machine is heavy! Use a mechanical hoist if necessary.

Secure the ice machine to the bin with the hardware provided (two metal straps and 4 bolts).

Place the bin and ice machine in the selected location and level it by adjusting the bin leg levelers.

Remove the white plastic covering the panels.

All models require connection to cold, potable water. A hand actuated valve within sight of the machine is required. Air cooled models have a single 3/8” FPT inlet water connection; a 3/8” FPT to 3/8” male flare adapter is available from the local Scotsman distributor or from a hardware store.

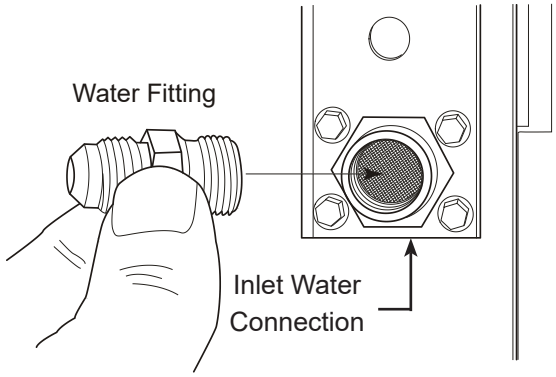

Water cooled models have a 1/2" FPT drain fitting plus an additional 3/8” FPT condenser inlet water connection.

Water Filters

If connecting to water filtration, filter only the water to the reservoir, not to the condenser. Install a new cartridge if the filters were used with a prior machine.

All models require drain tubing to be attached to them. Air cooled models have a single 3/4” FPT drain fitting in the back of the cabinet. Water cooled models have the same fitting plus an additional 1/2” FPT drain fitting in the back of the cabinet.

Install new tubing when replacing a prior ice machine, as the tubing will have been sized for the old model and might not be correct for this one.

1. Connect water supply to water inlet fittings. 3/8" OD tubing is recommended.

Note: This NSF listed model has a 1" anti-back flow air break between the water inlet tube end and the highest possible reservoir water level, no back flow device is required for the potable water inlet.

2. Connect drain tubing to drain fittings.

3. Route the drain tubing to building drain. Follow local codes for air gap to drain receptacle.

Drain Tubing:

Use rigid drain tubes and route them separately – do not Tee into the bin’s drain and, if water cooled,do not Tee the condenser drain into the reservoir or bin drain.

Vent the reservoir drain. A vertical vent at the back of the drain, extended about 8 - 10” will allow the gravity drain to empty and also keep any surges during draining from discharging water out the vent.

Insulate drain tubing if in a humid environment.

Horizontal runs of drain tubing need a 1/4” fall per foot of run for proper draining.

Follow all applicable codes.

Water Cooled Shown, Air Cooled Similar

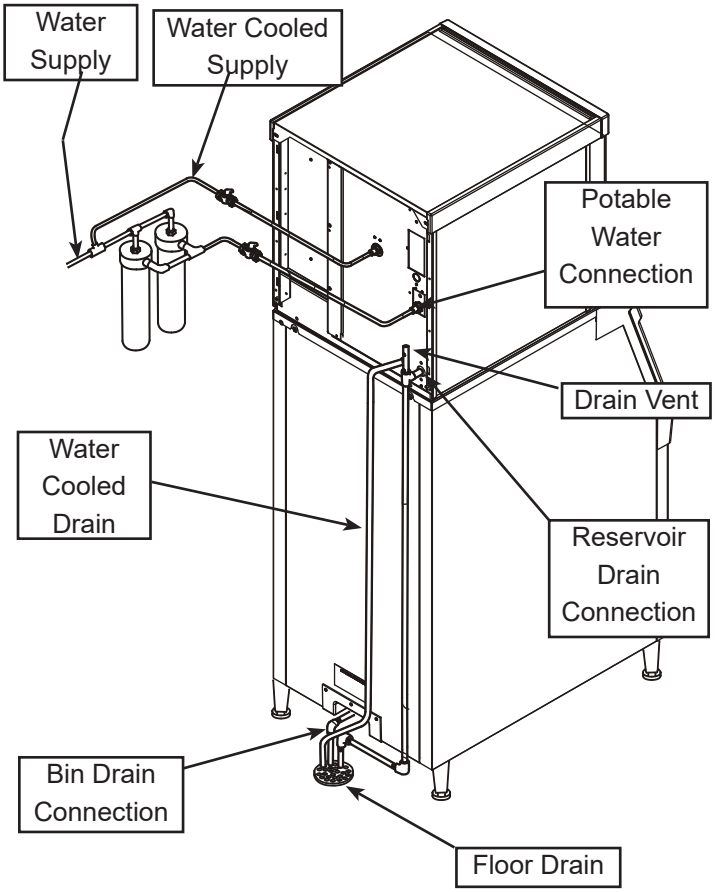

Plumbing Connections

Electrical

The machine is not supplied with a power cord as the machine is designed to be permanently connected.

The dataplate on the back of the cabinet details the power requirements, including voltage, phase, minimum circuit ampacity and maximum fuse size.

HACR type circuit breakers may be used in place of fuses. Extension cords are not permitted. Use of a licensed electrician is recommended.

Electrical connections are made inside the junction box in the back panel of the ice machine.

1. Remove the junction box cover and route the electrical supply cable through the access hole and properly attach the power supply wires to the leads in the junction box.
2. Install a field supplied strain relief per code. Attach a ground wire to the ground connection in the junction box.
3. Check voltage when complete.
4. Return the junction box cover to its original position and secure with the original screws.

The electrical disconnect switch with fuse protection must be a two pole type with a minimum of 3 mm between open contacts.

Follow all applicable local, state and national codes.

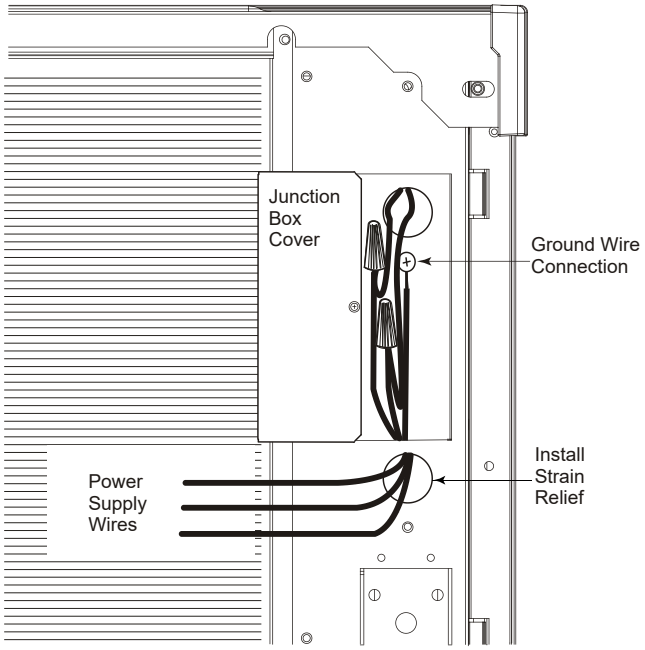

Air Break

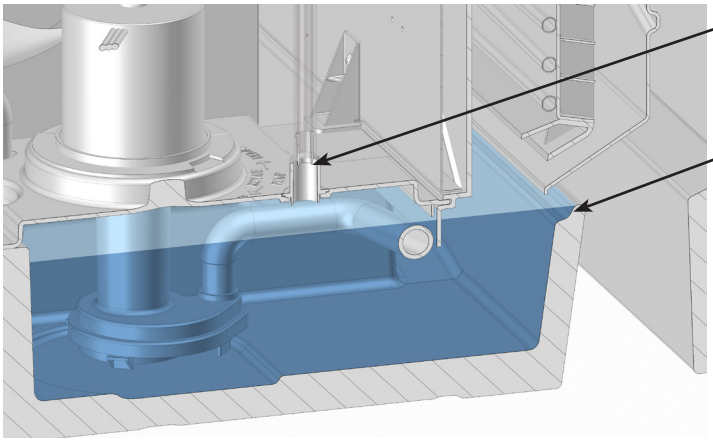

The air break is created by the gap between the maximum water level in the reservoir (additional water will spill out) and the water inlet connection. Reservoir water cannot contact the water inlet connection and in case of negative pressure, only air can enter the water supply hose.

Cutaway View of Water Reservoir

After connections,

1. Wash out the bin. If desired, the interior of the bin could be sanitized.
2. Locate the ice scoop (if supplied) and have it available for use when needed.

Final Check List:

1. Is the unit located indoors in a controlled environment?
2. Is the unit located where it can receive adequate cooling air?
3. Has the correct electrical power been supplied to the machine?
4. Have all the water supply connections been made?
5. Have all the drain connections been made?
6. Has the unit been leveled?
7. Have all unpacking materials and tape been removed??
8. Is the water pressure adequate?
9. Have the drain connections been checked for leaks?
10. Has the bin interior been wiped clean or sanitized?
11. Have any water filter cartridges been replaced?
12. Have all required kits and adapters been properly installed?

Lower Light and Switch Panel

This user accessible panel provides important operational information and duplicates the lights and switches on the controller. It also allows access to the On and Off buttons that operate the ice machine.

Open door to access On and Off switch buttons.

Sometimes access to the switches should be limited to prevent unauthorized operation. For that purpose a fixed panel is shipped in the hardware package. The fixed panel cannot be opened.

To install the fixed panel:

1. Remove the front panel.
2. From the back side of the panel, slide the door to left while spreading the clips to remove the original door from the bezel.
3. Slide the fixed panel into bezel until it snaps into place.
4. Reinstall front panel.

1. Remove front panel and evaporator cover. Check machine for any packing or wires rubbing moving parts.

2. Switch on the electrical power to the machine. Observe that some of the control's indicator lights glow and its display shows 0.

3. Open the water supply valve.

4. **Locate lower light and switch panel**. Push and release the **ON button on that panel**. The code display will begin to blink F.

The purge valve opens, the water pump starts and the inlet water valve opens to add water to the reservoir. In a few seconds the purge valve closes and the water pump stops. Water will flow into the machine until the reservoir is full. The hot gas valve and harvest assist device will activate, then the compressor and water pump will start. If it's an air cooled model, the fan motor(s) will begin to turn a few moments after the compressor starts. The display will show a continuous F. Five seconds later the hot gas valve will close and the harvest assist device will return to its standby position. Warm air will be discharged from air cooled models.

5. Observe the Ready for Harvest indicator light. It may blink early in the cycle, that is normal. The control will ignore that signal for the first 6 minutes of freeze.

6. During the Freeze cycle move the curtain and observe that the SW1 or SW2 light on the control board blinks On when the curtain moves away from the evaporator and Off when returned to its normal position.

Note: Moving the curtain during the Freeze cycle has no affect on control function, but will cause water to flow into the cube chute/bin.

7. When enough ice has frozen, the Ready for Harvest indicator light will be on steady. After it's been on steady for a few seconds Harvest will begin.

8. The display shows an H.

The hot gas valve opens, the air cooled fan motor(s) shut off and the harvest assist mechanism is activated. The purge valve opens to drain some water, when it does the inlet water valve opens to refill the reservoir. After a few seconds the purge valve closes but the inlet water valve continues to fill the reservoir. Harvest continues until the ice is released as a unit and forces the curtain to open. When the curtain opens it signals the controller which returns the unit to a freeze cycle.

9. Check the ice harvested for proper bridge thickness. The ice bridge is factory set at 1/8 inch. If needed, adjust bridge thickness. Do NOT make it too thin.

10. Return the front panel and evaporator cover to their normal positions and secure to the machine.

11. Instruct the user in the operation of the machine and its maintenance requirements.

12. Fill out and mail the warranty registration form or register it on line at Scotsman-ice.com.

Typical Ice Making Cycle Times (minutes).

Listed times are for clean machines in proper installations. Cycle length at startup will be longer until the system stabilizes.

Model	70°F air / 50°F. water	90°F. air / 70°F. water
MC0322A	10-12	14-16
MC0322W	9-11	10-12
MC0522A	11-13	16-18
MC0522W	13-15	13-15
MC0330A	9-11	12-14
MC0330W	8-10	9-11
MC0530A	12-14	16-18
MC0530W	10-12	11-13
MC0630A	9-11 1	1-13
MC0630W	7-9	10-12
MC0722A	13-15	19-22
MC0830A	10-12	13-15
MC0830W	11-13	12-14
MC1030A	9-11	11-13
MC1030W	9-11	10-12

Bridge Thickness - For the Service Tech Only

1. Push and hold Off till the machine stops.
2. Remove evaporator cover.
3. Remove curtain.
4. Use a hex wrench and rotate the bridge thickness adjustment screw in 1/8” turn increments CW to increase bridge thickness.
5. Rotate CCW to decrease bridge thickness.

Caution: Do not make the bridge too thin or the machine will not harvest properly. Bridge thickness adjustments are not covered by warranty.

6. Return curtain and evaporator cover to their normal positions.
7. Push and release the On button. Check next harvest of ice. Repeat steps 1-6 if needed.

Ice Bridge Thickness Measurement

Note: Indentations may be deeper on MC0322 and MC0330

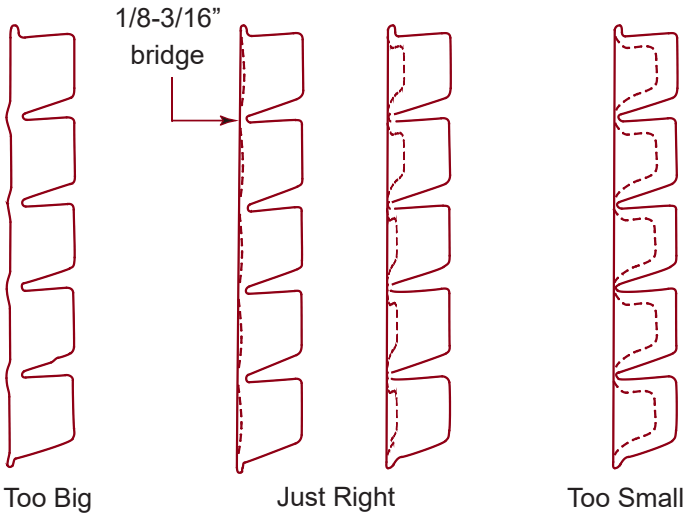

Bridge Thickness Adjustment Mechanism

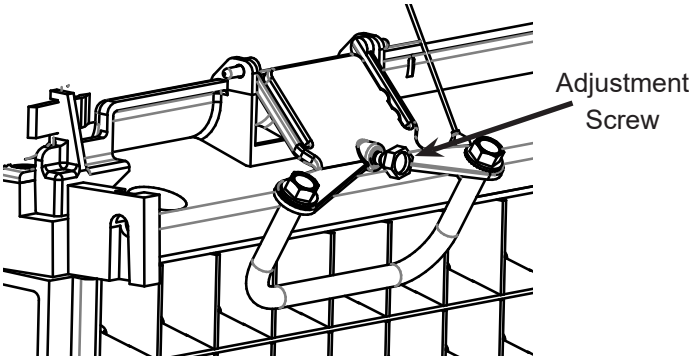

Water Purge Setting

The water purge is factory set to the automatic position, suitable for most water conditions. The setting can be changed to one of 5 manual settings or left on automatic.

Purge setting	1 - Minimum	2 - Moderate	3 - Standard	4 - Heavy	5 - Maximum	A - Automatic
Water Type	RO water or equivalent	Low TDS non - RO water	Use for typical water	High TDS water	Very High TDS water	Any with conductivity not less than 10 microSiemens/cm

To set:

1. Switch the machine OFF by holding the Off button in until a number or the letter A shows on the display.
2. Press and release the On button repeatedly until the number on the display corresponds to the desired setting.
3. Press and release the Off switch again to return to the normal control state.

Note: Water cooled models- the refrigeration system discharge pressure is factory set at 245 PSIG, which should yield a freeze cycle discharge water temperature of about 105-110 degrees F. Adjust if necessary.

Once started, the ice machine will automatically make ice until the bin or dispenser is full of ice. When ice level drops, the ice machine will resume making ice.

Caution: Do not place anything on top of the ice machine, including the ice scoop. Debris and moisture from objects on top of the machine can work their way into the cabinet and cause serious damage. Damage caused by foreign material is not covered by warranty.

There are five indicator lights at the front of the machine that provide information on the condition of the machine.

Indicator Lights:

- Power
- Status
- Water
- Clean (De-scale & Sanitize)
- Bin Full

If the Clean light is solid yellow, the machine has determined that it needs to be cleaned. Contact an authorized Scotsman service agent and have the machine cleaned, de-scaled and sanitized.

During normal operation, if the Clean light begins to blink yellow, the machine in Preservation mode, which initiates a timed freeze in response to short freeze errors. Contact an authorized Scotsman service agent to service the machine immediately. It is likely that the machine needs to be cleaned (de-scaled and sanitized), but may need additional service.

Indicator Lights & Their Meanings					
	Power	Status	Water	De-Scale & Sanitize	Bin Full
Steady Green	Normal	Normal – bin full or making ice	-	-	Bin is full
Blinking Green	Self Test Failure	Switching on or off	-	-	
Blinking Red	-	Diagnostic shutdown or, if making ice, temperature sensor failure	Lack of water	-	
Yellow	-	-	-	Time to de-scale and sanitize	
Blinking Yellow	-	-	-	Preservation Mode is active or clean cycle is in progress	
Light off	No power	Switched off	Normal	Normal	Bin is not full

If the Water light is on, the machine has sensed a lack of water. Check the water supply to the machine. The water could have been shut off or the water filter cartridges might need to be changed.

Note: A Component Indicator Light switches ON to indicate that the component is operating.

Note: There are two Curtain Switch lights, SW1 and SW2. These single plate models have one curtain switch light on all the time, as a curtain switch light is ON when a curtain is either open or not present.

The On and Off switch buttons are front accessible.

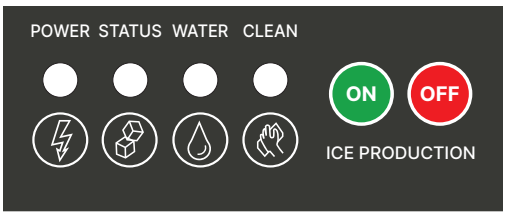

To switch the machine OFF, push and release the Off button. The machine will shut off at the end of the next cycle. To shut the machine off immediately, push and hold the Off button for 3 seconds.

To switch the machine ON, push and release the On button. The machine will go through a start up process and then resume ice making.

Control Options

There are two optional, field installed controls that can be added to this machine.

- Vari-Smart™ adjustable ice level control
- Smart-Board™ advanced control board and data logger

Adjustable ice level control

When this option is present there is an adjustment post and an additional indicator light to the right of the controller switches. The ultrasonic ice level control allows the user to control the point that the ice machine will stop making ice before the bin or dispenser is full. Reasons for this include:

- Seasonal changes in ice used
- Planning to sanitize the bin
- Faster turnover for fresher ice
- Certain dispenser applications where maximum ice level is not desired

Note: Ice will build up in the bin or dispenser at an angle, the distance set will be from the sensor to the top of the ice. The sensor position is shown in the cabinet layout diagrams.

The actual distance between the highest point of the ice may be closer or further away than the distance set, depending upon the angle of the ice.

Use of control

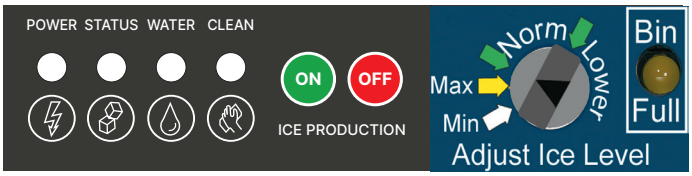

There are several positions the ice level can be set to, including Off or Max (knob and label indicators lined up), where it fills the bin until the standard bin control shuts the machine off. See the kit's instructions for complete details.

Rotate the adjustment post to the desired ice level. The machine will fill up to that level and when it shuts off the Bin Full indicator light will be On.

Ice

The cuber drops ice in large sections. That ice will break up into random parts as it falls into the bin, but some large sections may remain on top of the ice in the bin. In a dispenser, this ice will break up into mostly individual cubes as the dispense mechanism moves the ice. The ice in the bin will normally slope down from the right to the left.

Heat

When making ice, air-cooled models will discharge hot air out the back of the cabinet.

Noise

The ice machine will make noise when it is in ice making mode. The compressor, fan motor(s) if air cooled, and water pump all produce some sound. It is also normal to hear some cracking just before the harvest cycle begins. In addition, during the harvest cycle the harvest mechanism may click twice as it pushes the ice out and returns to its normal position. The ice harvests as a unit or slab, which makes some noise when it impacts the bin or dispenser. These noises are all normal for this machine.

This ice system requires three types of maintenance:

- Remove the build up of mineral scale from the ice machine's water system and sensors.
- Sanitize the ice machine's water system and the ice storage bin or dispenser.
- Clean or replace the air filter and clean the air cooled condenser (air cooled models only).

It is the User's responsibility to keep the ice machine and ice storage bin in a sanitary condition. Without human intervention, sanitation will not be maintained. Ice machines also require occasional cleaning of their water systems with a specifically designed chemical. This chemical dissolves mineral build up that forms during the ice making process.

The ice machine's water system should be cleaned and sanitized a minimum of twice per year. Sanitize the ice storage bin as frequently as local health codes require, and every time the ice machine is cleaned and sanitized.

Preparing to Clean:

1. Remove the front panel.
2. Remove the evaporator cover.

Scale Removal:

3. Push and release the Clean button. The yellow Clean light will blink and the display will show C. The machine will harvest any ice, drain the reservoir and begin to refill it.
4. Observe code display, when it blinks the characters "A D I" immediately go to the next step.
5. Pour the below specified amount Scotsman Clear 1 ice machine scale remover into the reservoir. The unit will circulate the scale remover, then drain and flush it. This will take 35 minutes, then the machine will stop and the display will show 0.

MC0322, MC0330	8 ounces
MC0522, MC0530 or MC0630	10 ounces
MC0722, MC0830 or MC1030	12 ounces

Note: Using chemicals or dilution ratios other than what is specified will damage the ice machine and significantly affect the performance and life of the ice machine.

⚠CAUTION

Ice machine cleaner contains acids. Acids can cause burns.

If concentrated cleaner comes in contact with skin, flush with water. If swallowed, do NOT induce vomiting. Give large amounts of water or milk. Call Physician immediately. Keep out of the reach of children.

Clean internal parts:

6. Mix a cleaning solution of 6oz of Scotsman Clear 1 scale remover with 9 cups (72oz) of 105-115° F potable water.
7. In a separate bucket, mix a sanitizing solution of 1.6 oz of Nu-Calgon IMS Sanitizer with 1 gallon (128 oz) of 105-115 degree F. potable water.
8. Remove air filter(s)(if applicable), water level sensor and housing, water distributor(s), curtain(s), ice thickness sensor, and splash panel for additional cleaning.
9. Soak and scrub each part (including the evaporator cover!) using the previously prepared solution of Scotsman Clear 1 scale remover and a nylon brush, and then rinse with water. Save scale remover solution.
10. Soak and scrub each part using the previously prepared sanitizing solution. No rinse needed. Save sanitizing solution.
11. Using a non-metallic scouring pad, scrub spillway with sanitizer to remove any material buildup and debris.
12. Reinstall ice thickness sensor, curtain(s), splash panel, water distributor(s), and water level sensor in their original positions. Be sure water level sensor and ice thickness sensor are completely dry.

Sanitize:

13. Push and release the Clean button. The yellow Clean light will blink and the display will show C. The machine will go through a harvest cycle, drain the reservoir and begin to refill it.
14. Observe code display, when it blinks the characters "A D I" immediately go to the next step.
15. Pour the previously prepared sanitizing solution into the reservoir until it is full. The unit will circulate the sanitizer, then drain and flush it. This will take 35 minutes, then the machine will stop and the display will show 0.
16. Remove all ice from storage bin or dispenser and sanitize bin or dispenser with remaining sanitizing solution while machine completes sanitizing cycle. Pour excess sanitizer down drain.

Finish Cleaning Process:

17. Reinstall evaporator cover and front panel (with air filter(s) if applicable) in their original positions.
18. Push and release the "ON" button to resume ice making.

Want more guidance?

Scan QR Code to download the Scotsman ICELINQ® App to connect to this machine via Bluetooth® and access the self-guided cleaning process.

Additional maintenance:

Air filter (air-cooled models)

Clean air filters when they become visibly dirty. They will need cleaning more often than the other items.

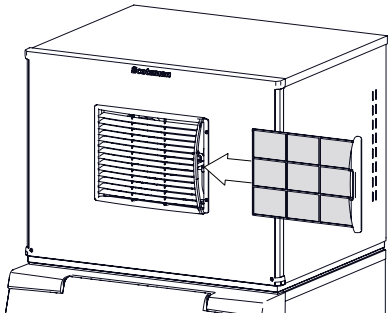

1. Pull air filter(s) from the front panel.
2. Wash the dust and grease off the filter.
3. Return it to its original position.

Do not operate the machine without the filter in place except during cleaning.

Condenser (air-cooled models)

If the machine has been operated without a filter the air cooled condenser fins will need to be cleaned.

They are located under the fan blades. The services of a refrigeration technician will be required to clean the condenser.

Exterior panels

The front, top and side panels are durable stainless steel. Fingerprints, dust and grease will require cleaning with a good quality stainless steel cleaner.

Note: If using a sanitizer or a cleaner that contains chlorine on the panels, after use be sure to wash the panels with clean water to remove chlorine residue.

Water filters

If the machine has been connected to water filters, check the cartridges for the date they were replaced or for the pressure on the gauge. Change cartridges if they've been installed more than 6 months or if the pressure drops too much when the ice machine fills with water.

Reasons the machine might shut itself off:

- Lack of water.
- Freeze cycle takes too long.
- Harvest cycle takes too long.
- High discharge temperature.
- Controller self test failure.

Check the following:

1. Has the water supply to the ice machine or building been shut off? If yes, the ice machine will automatically restart within 25 minutes after water begins to flow to it.
2. Has power been shut off to the ice machine? If yes, the ice machine will automatically restart when power is restored.
3. Has someone shut the water off to a water cooled unit? If yes, after the water supply has been restored the ice machine may need to be manually reset.
4. Is the curtain open because some ice is stuck under it? If so, remove the ice and the machine should start in a few minutes.

To Manually Reset the machine.

- Open the switch door
- Push and release the Off button.
- Push and release the On button.

To Shut the Machine Off:

1. Push and hold the Off button for 3 seconds or until the machine stops.

Open Door to Reset or Switch Off

Note: Curtain can be removed & replaced anytime the machine is in a standby mode or when it is in a freeze cycle. However, removal of the curtain during freeze will result in water flowing into the bin. Removal of the curtain during harvest terminates harvest at that point and, if left off, will result in the machine shutting off.

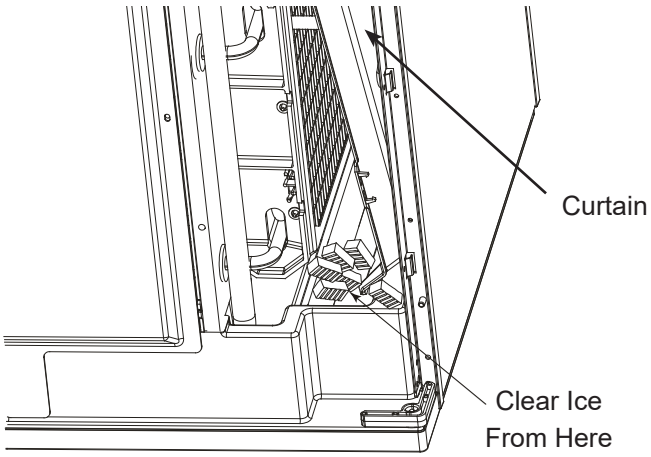

Clear Ice From Beneath Curtain

Scotsman ICELINQ® Mobile App

All Prodigy ELITE® models are Bluetooth® enabled and are compatible with the Scotsman ICELINQ® app, available on both the Apple App Store and Google Play Store.

The ICELINQ mobile app uses Bluetooth connectivity to allow users to easily monitor, control, and maintain their machine:

- View machine status
- Control machine operation
- Adjust machine settings
- View active errors with troubleshooting tips
- Initiate self-guided cleaning
- Access service resources and warranty info

Scan QR Code to download the Scotsman ICELINQ® App

SCOTSMAN ICE SYSTEMS

101 Corporate Woods Parkway

Vernon Hills, IL 60061

www.scotsman-ice.com

800-726-8762

17-3737-01